ENSTROM TH-28/480 SERIES ILLUSTRATED PARTS CATALOG

RECORD OF REVISIONS

REV.	ISSUE DATE	DATE INSERTED	BY	REV.	ISSUE DATE	DATE INSERTED	BY
12	09/02/16	09/02/16	JW				
13	05/09/18	05/09/18	JW				
14	09/27/18	09/27/18	JW				
15	12/03/19	12/03/19	JW				
16	07/22/20	07/22/20	NP				
17	11/28/22	11/28/22	AD				

Maintain this record in the front of the manual.

UNCONTROLLED COPY WHEN DOWNLOADED OR PRINTED

Visit www.enstromhelicopter.com for instructions to order an original manual and to register for email notification of updates.

INTENTIONALLY LEFT BLANK

UNCONTROLLED COPY WHEN DOWNLOADED OR PRINTED

Visit www.enstromhelicopter.com for instructions to order an original manual and to register for email notification of updates.

ENSTROM TH-28/480 SERIES

ILLUSTRATED PARTS CATALOG

2001 EDITION

MODEL EFFECTIVITY: TH-28, 480, AND 480B

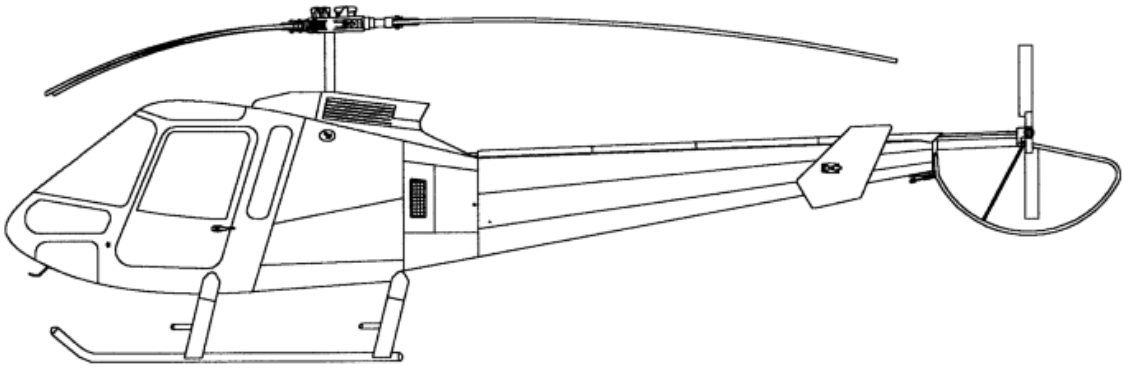

Download an electronic copy of this manual from the Technical Support page at www.enstromhelicopter.com.

Copyright 2022 by
The Enstrom Helicopter Corporation
2209 22nd Street
Menominee, Michigan 49858-3515

Telephone: 906-863-1200
Fax: 906-863-6821

UNCONTROLLED COPY WHEN DOWNLOADED OR PRINTED

Visit www.enstromhelicopter.com for instructions to order an original manual and to register for email notification of updates.

INTENTIONALLY LEFT BLANK

UNCONTROLLED COPY WHEN DOWNLOADED OR PRINTED

Visit www.enstromhelicopter.com for instructions to order an original manual and to register for email notification of updates.

ENSTROM TH-28/480 SERIES ILLUSTRATED PARTS CATALOG

RECOMMENDED CHANGE REPORT

This Illustrated Parts Catalog (IPC) is prepared and distributed by The Enstrom Helicopter Corporation and is intended for use by personnel responsible for maintaining Enstrom TH-28, 480, and 480B helicopters. This manual is periodically revised. If, in the opinion of the user, any information has been omitted or requires clarification, please direct your comments to Enstrom via this form (duplicate) or other similar form. Send the recommended changes to:

The Enstrom Helicopter Corporation
2209 22nd Street
Menominee, MI 49858-3515

ATTN: Technical Publications

Manual Identification: Enstrom TH-28/480 Series Illustrated Parts Catalog
Manual Date: November 16, 2001
Revision Number and Date: _____
Aircraft Model: _____

Recommended Change:

UNCONTROLLED COPY WHEN DOWNLOADED OR PRINTED

Visit www.enstromhelicopter.com for instructions to order an original manual and to register for email notification of updates.

INTENTIONALLY LEFT BLANK

UNCONTROLLED COPY WHEN DOWNLOADED OR PRINTED

Visit www.enstromhelicopter.com for instructions to order an original manual and to register for email notification of updates.

TABLE OF CONTENTS

Figure	Description	Page
	Record of Revisions	–
	Change Instructions	–
	Title Page	i
	Recommended Change Report	iii
	Table of Contents	v
	Effective Page List	xi
	Part Number Index	xx

SECTION 1 – INTRODUCTION

	Table of Contents	1-1.2
	Scope	1-2
	Introductory Information	1-2
	Detailed Parts List	1-3
	Appendices	1-4

SECTION 2 – PARTS ORDERING INFORMATION

	Table of Contents	2-1.2
	General	2-2
	Parts Orders	2-2
	Shipment	2-3
	Emergency Requirements	2-3
	Credit Terms	2-3

SECTION 3 – STRUCTURES

	Table of Contents	3-1.2
3-1	Structural Assembly	3-2
3-2	Cowling and Access Panels	3-8
3-3	Windshield and Window Installation	3-16
3-4	Sliding Window Installation	3-22
3-5	Engine Cowl Door Opener	3-24
3-6	Cabin Door Assembly	3-25.1
3-6.1	Cabin Door Installation	3-25.7
3-6.2	Cabin Door Opener	3-26
3-7	Tailcone Installation	3-30
3-8	Horizontal and Vertical Stabilizer Installation	3-32
3-9	Tail Rotor Guard and Extension Tube Installation	3-36
3-10	Tail Rotor Guard Installation (4172000-101)	3-38
3-11	Tail Rotor Guard Installation (4172000-9)	3-40
3-12	Tailcone Vibration Absorber Installation	3-42
3-13	Tail Rotor Drive Shaft Cover Installation	3-46
3-14	Seat Installation - TH-28	3-52
3-15	Seat Installation - 480/480B	3-54
3-16	Seat Assembly	3-56
3-17	Seat Base Assembly	3-58
3-18	Bench Seat Installation	3-62
3-19	Passenger Footrest Installation	3-70

UNCONTROLLED COPY WHEN DOWNLOADED OR PRINTED

Visit www.enstromhelicopter.com for instructions to order an original manual and to register for email notification of updates.

TABLE OF CONTENTS

Figure	Description	Page
3-20	Exterior Markings	3-72
3-21	Interiors	3-76
SECTION 4 – LANDING GEAR		
	Table of Contents	4-1.2
4-1	Landing Gear Cross Tube Installation	4-2
4-2	Landing Gear Assembly and Installation	4-4
4-3	Landing Gear Oleo Installation	4-8
4-4	Oleo Assembly	4-10
4-5	Landing Gear Fairing Installation	4-14
4-6	Landing Gear Steps	4-18
SECTION 5 – FUEL SYSTEM		
	Table of Contents	5-1.2
5-1	Fuel Cell Installation – Aerotech/UFCC Fuel Cells	5-2
5-2	Fuel Bladder Structure Assy/Install– Aerotech/UFCC Fuel Cells	5-6
5-3	Fuel Cell Installation - Aerazur Fuel Cells	5-14
5-4	Fuel Cell Installation - Aerazur Fuel Cells SN 5011 and 5012	5-16
5-5	Fuel Line Installation – Aerotech/UFCC Fuel Cells	5-20
5-6	Fuel Line Installation - Aerazur Fuel Cells	5-26
5-7	Flanged Plate Assembly – Aerotech/UFCC Fuel Cells	5-30
5-8	Fuel Shutoff Valve Assembly	5-32
5-9	Sump Drain Valve Installation	5-40
5-10	Fuel Shutoff Cable Installation SN 5001- 5145	5-42
5-11	Fuel Shutoff Cable Installation	5-44
5-12	Optional Airframe Mounted Fuel Filter	5-48
SECTION 6 – POWER PLANT & SYSTEMS		
	Table of Contents	6-1.2
6-1	Engine Buildup Assembly	6-2
6-1.1	Fire Curtain Installation	6-11.3
6-2	Starter/Generator Cooling Installation	6-12
6-3	Engine Air Induction System	6-14
6-4	Particle Separator/Scav-Air Line Installation	6-18
6-5	Scav-Air/Anti-Ice Control Panel Installation	6-20
6-6	Engine Power Control Installation	6-22
6-7	Engine Idle Stop Assembly	6-26
6-7.1	Engine Idle Stop Assembly – Dual Start Control	6-28
6-7.2	Engine Idle Stop Assembly – Dual Start Control Detail	6-30
6-7.3	Engine Idle Stop Assembly – Dual Start Control Relay Detail	6-32
6-8	Droop Compensator Installation	6-34
6-9	Engine Oil System	6-37
6-10	Oil Cooler Blower Installation	6-42
6-11	Oil Cooler Ducting TH-28 SN 3006, 480 SN 5001-5022	6-46
6-12	Oil Cooler Ducting TH-28 SN 3007, 480 SN 5023 and Subs	6-48
6-13	Eductor Installation	6-52
6-14	Eductor Installation (Obsolete)	6-54

UNCONTROLLED COPY WHEN DOWNLOADED OR PRINTED

Visit www.enstromhelicopter.com for instructions to order an original manual and to register for email notification of updates.

TABLE OF CONTENTS

Figure	Description	Page
SECTION 7 – DRIVE TRAIN		
	Table of Contents	7-1.2
7-1	Overrunning Clutch Assembly	7-2
7-1.1	Clutch Vent Reservoir Assembly	7-3
7-2	Drive Shaft Assembly	7-4
7-3	Drive System Installation	7-6
7-4	Lower Pulley Assembly (Grease Lubricated)	7-10
7-5	Lower Pulley Assembly (Oil Lubricated)	7-14
7-6	Upper Pulley Assembly (Keyed Pinion)	7-18
7-6.1	Upper Pulley Assembly (Splined Pinion)	7-20.2
7-7	Main Rotor Transmission Installation	7-22
7-8	Main Rotor Transmission Assembly (Keyed Pinion)	7-24
7-8.1	Main Rotor Transmission Assembly (Splined Pinion)	7-26.2
7-8.2	Main Rotor Transmission Seal Retainer Assembly	7-27.1
7-9	Main Rotor Transmission Filtration/Cooling System	7-28
7-10	Tail Rotor Drive Shaft Installation	7-32
7-11	Tail Rotor Transmission Assembly	7-36
SECTION 8 – ROTOR SYSTEMS		
	Table of Contents	8-1.2
8-1	Main Rotor Hub Assembly - Grease Lubricated	8-2
8-2	Main Rotor Hub Assembly - Oil Lubricated	8-6
8-3	Main Rotor Blade and Retention Assembly	8-10
8-4	Retention Assembly/Flapping Pin Installation	8-16
8-5	Hydraulic Damper Assembly	8-18
8-6	Main Rotor Damper Installation	8-22
8-7	Tail Rotor Assembly	8-24
SECTION 9 – FLIGHT CONTROLS		
	Table of Contents	9-1.2
9-1	Cyclic Stick and Torque Tube Installation	9-2
9-2	Cyclic Control Tube and Bellcrank Installation	9-6
9-3	Cyclic Trim Assembly	9-12
9-4	Collective Stick and Torque Tube Installation	9-16
9-5	Collective Control Tube and Bellcrank Installation	9-18
9-6	Collective Stick – Pilot (SN 5135 and Prior)	9-20
9-7	Collective Stick – Copilot (SN 5135 and Prior)	9-22
9-7.1	Collective Stick – Pilot (SN 5136 and Subs)	9-23.1
9-7.2	Collective Stick – Copilot (SN 5136 and Subs)	9-23.5
9-8	Collective Trim Assembly	9-24
9-9	Collective Friction Assembly	9-28
9-10	Lower Swashplate Assembly Installation	9-30
9-11	Lower Swashplate Assembly	9-32
9-12	Upper Swashplate Assembly and Controls	9-34
9-13	Main Rotor Pitch Change Controls	9-38
9-14	Tail Rotor Control System	9-40
9-15	Tail Rotor Rotating Controls	9-48

UNCONTROLLED COPY WHEN DOWNLOADED OR PRINTED

Visit www.enstromhelicopter.com for instructions to order an original manual and to register for email notification of updates.

TABLE OF CONTENTS

SECTION 10 – ELECTRICAL/INSTRUMENT SYSTEMS

Figure	Description	Page
	Table of Contents	10-1.2
10-1	TH-28 Instrument Panel Equipment Installation	10-2
10-2	480 Standard Instrument Panel Equipment Installation	10-8
10-3	480 (Optional)/480B Instrument Panel Equipment Installation	10-16
10-4	480B Instrument Panel Equipment Installation	10-22
10-5	TH-28 Circuit Breaker Panel	10-30
10-6	480 Circuit Breaker Panel	10-32
10-7	480 Optional Circuit Breaker Panel	10-34
10-8	480B Circuit Breaker Panel	10-36
10-9	480B Circuit Breaker Panel	10-38
10-10	Pedestal Miscellaneous Equipment	10-44
10-11	Outside Air Temperature (OAT) Gauge Installation	10-46
10-12	NiCad Battery Tray Installation	10-48
10-13	Standard Battery Tray Installation	10-50
10-14	Battery Installation	10-54
10-15	Aft Battery Installation	10-56
10-16	Electrical Component Installation (Right Side Backwall)	10-58
10-17	Electrical Component Installation Relays Only (Right Side Backwall)	10-61
10-18	Electrical Components - Keel Installation	10-66
10-19	Generator Control Unit/T9 Terminal Strip Installation	10-72
10-20	Engine Oil Pressure and Torque Indication System	10-74
10-21	Engine T.O.T. Harness Terminal Block	10-76
10-22	Fire Detector Installation	10-78
10-23	Low Rotor Warning and Micro Switch Installation	10-80
10-23.1	HI-Lo Rotor RPM Switch Installation	10-83.1
10-24	TH-28 Chip Detector Program Continuity Sensor Installation	10-84
10-24.1	480/480B Programmed Continuity Sensors – Engine and Main Rotor Transmission Chip Detectors	10-86.2
10-24.2	480/480B Programmed Continuity Sensor – Tail Rotor Transmission Chip Detector	10-86.6
10-25	Bearing Temperature Warning System (Grease Lubricated)	10-88
10-26	Bearing Temperature Warning System (Oil Lubricated)	10-90
10-27	Engine Air Inlet Pressure System	10-94
10-28	Landing Light Assembly Installation.	10-98
10-29	LED Landing Light Assembly Installation	10-100
10-30	Position/Anti-Collision Light Installation	10-104
10-31	Position/Anti-Collision Light Assembly	10-106
10-32	Position/Anti-Collision LED Light Assembly	10-108
10-33	Static Port and Pitot Tube Installation	10-110
10-34	Static and Pitot Line Installation	10-114
10-35	Instrument Console Shroud Installation	10-118
10-36	KMA 24H-71 Audio Panel Installation	10-120
10-37	GTX 327 Transponder Installation	10-124
10-38	GTX 327 Antenna Installation Forward (Preferred) Location	10-128
10-39	GTX 327 Antenna Installation Aft (Alternate) Location	10-132

UNCONTROLLED COPY WHEN DOWNLOADED OR PRINTED

Visit www.enstromhelicopter.com for instructions to order an original manual and to register for email notification of updates.

TABLE OF CONTENTS

Figure	Description	Page
SECTION 11 – UTILITY SYSTEMS		
	Table of Contents	11-1.2
11-1	Bleed Air Heater and Defroster Installation	11-2
11-2	Heater and Defroster Valve Assemblies	11-8
11-3	Heater Manifold Assembly	11-10
11-4	Fresh Air Ventilation Installation	11-12
11-5	Fresh Air Ventilation Installation	11-16
11-6	Overhead Console Vent/Light Assembly	11-20
APPENDIX A – EQUIVALENT PARTS		
	Table of Contents	A-3
	Introduction	A-4
	Equivalent Parts Tables	A-4
APPENDIX B – HARDWARE SUBSTITUTIONS		
	Cover Page	B-1
	Table of Contents	B-1
	Introduction	B-2
	Acceptable Substitution Conditions	B-2
	Hardware Tables	B-2
	Table A – Bolts	B-3
	Table B – Screws	B-5
	Table C – Nuts	B-7
	Table D – Nut Plates	B-8
	Table E – Solid Rivets	B-9
	Table F – Blind Rivets	B-9
	Table G – Washers	B-10
	Table H – Rivnuts	B-12
	Table I – Turnbuckles	B-12
	Table J – Grommets	B-12
	Table K – Cotter Pins	B-12
	Table L – Clamps (Nylon)	B-13
	Table M – Cable Ties	B-13
	Table N – U-Channel (Rubber)	B-14
	Table O – Shrink Tubing	B-14
	Table P – Ring Tongue Terminals	B-14
	Table Q – Retaining Rings	B-15
	Table R – Cushioned Clamps	B-15
	Table S – Plusnuts	B-15
	Table T – Solder Sleeve Shield Terminator	B-15
	Table U – Plug, Pipe – Countersink Hex Head	B-15
	Table V – Clip Nut	B-15
	Table W – Plug and Bleeder – Screw Thread	B-15

UNCONTROLLED COPY WHEN DOWNLOADED OR PRINTED

Visit www.enstromhelicopter.com for instructions to order an original manual and to register for email notification of updates.

Figure	Description	Page
	Table X – Pin, Retaining, Safety	B-15
	Table Y – Quarter Turn Fastener	B-15
	Table Z – Quick Disconnect Terminal	B-15
	Table AA – Plug (BNC, TNC, N)	B-15
	Table AB – Roll Pin	B-15
	Table AC – Sleeve, Coupling	B-16
	Table AD – Clevis Pin	B-16
	Table AE – Quarter (1/4) Turn Fastener Receptacle	B-16

UNCONTROLLED COPY WHEN DOWNLOADED OR PRINTED

Visit www.enstromhelicopter.com for instructions to order an original manual and to register for email notification of updates.

EFFECTIVE PAGE LIST

Page	Date	Page	Date
i	Nov 28/22	xliii	Nov 28/22
ii	Dec 15/10	xliv	Nov 28/22
iii	Feb 1/13	xlv	Nov 28/22
iv	Jan 29/11	xlvi	Nov 28/22
v	Oct 30/15	xlvii	Nov 28/22
vi	Nov 28/22	xlviii	Nov 28/22
vii	Oct 30/15	xlix	Nov 28/22
viii	Dec 20/13	l	Nov 28/22
ix	Jul 22/2020	li	Nov 28/22
x	Jul 22/2020	lii	Nov 28/22
xi	Nov 28/22	liii	Nov 28/22
xii	Jul 22/2020	liv	Nov 28/22
xiii	Nov 28/22	lv	Nov 28/22
xiv	Nov 28/22	lvi	Nov 28/22
xv	Nov 28/22	lvii	Nov 28/22
xvi	Nov 28/22	lviii	Nov 28/22
xvii	Nov 28/22	lix	Nov 28/22
xviii	Jul 22/2020	lx	Nov 28/22
xix	Jul 22/2020	lxi	Nov 28/22
xx	Nov 28/22	lxii	Nov 28/22
xxi	Nov 28/22	lxiii	Nov 28/22
xxii	Nov 28/22	lxiv	Nov 28/22
xxiii	Nov 28/22	lxv	Nov 28/22
xxiv	Nov 28/22	lxvi	Nov 28/22
xxv	Nov 28/22	lxvii	Nov 28/22
xxvi	Nov 28/22	lxviii	Nov 28/22
xxvii	Nov 28/22	lxix	Nov 28/22
xxviii	Nov 28/22	lxx	Nov 28/22
xxix	Nov 28/22	lxxi	Nov 28/22
xxx	Nov 28/22	lxxii	Nov 28/22
xxxi	Nov 28/22	lxxiii	Nov 28/22
xxxii	Nov 28/22	lxxiv	Nov 28/22
xxxiii	Nov 28/22	lxxv	Nov 28/22
xxxiv	Nov 28/22	lxxvi	Nov 28/22
xxxv	Nov 28/22	lxxvii	Nov 28/22
xxxvi	Nov 28/22	lxxviii	Nov 28/22
xxxvii	Nov 28/22	lxxix	Nov 28/22
xxxviii	Nov 28/22	lxxx	Nov 28/22
xxxix	Nov 28/22	lxxxi	Nov 28/22
xl	Nov 28/22	lxxxii	Nov 28/22
xli	Nov 28/22	lxxxiii	Nov 28/22
xlii	Nov 28/22	lxxxiv	Nov 28/22

UNCONTROLLED COPY WHEN DOWNLOADED OR PRINTED

Visit www.enstromhelicopter.com for instructions to order an original manual and to register for email notification of updates.

EFFECTIVE PAGE LIST

Page	Date	Page	Date
lxxxv	Nov 28/22	2-1.2	Nov 28/22
lxxxvi	Nov 28/22	2-2	Jul 22/2020
lxxxvii	Nov 28/22	2-3	Jul 31/12
lxxxvii	Nov 28/22	2-4	Jul 31/12
lxxxviii	Nov 28/22	3-1	Aug 13/07
lxxxix	Nov 28/22	3-1.1	Dec 20/13
lxxxx	Nov 28/22	3-1.2	Nov 28/22
lxxxxi	Nov 28/22	3-2	Jul 31/12
lxxxxii	Nov 28/22	3-3	Jul 31/12
lxxxxiii	Nov 28/22	3-4	Jul 31/12
lxxxxiv	Nov 28/22	3-5	Oct 30/15
lxxxxv	Nov 28/22	3-6	Jul 31/12
lxxxxiv	Nov 28/22	3-7	Jul 31/12
lxxxxv	Nov 28/22	3-8	Dec 20/13
lxxxxvi	Nov 28/22	3-9	Jul 31/12
lxxxxvii	Nov 28/22	3-10	Dec 3/19
lxxxxviii	Nov 28/22	3-11	Dec 3/19
lxxxxix	Nov 28/22	3-12	Jul 22/2020
xc	Nov 28/22	3-13	Oct 30/15
xci	Nov 28/22	3-14	Jul 22/2020
xcii	Nov 28/22	3-15	Dec 3/19
xciii	Nov 28/22	3-15.1	Jul 22/2020
xciv	Nov 28/22	3-15.2	Feb 1/13
xcv	Nov 28/22	3-16	Dec 20/13
xcvi	Nov 28/22	3-17	Jul 31/12
xcvii	Nov 28/22	3-18	Jul 31/12
xcviii	Nov 28/22	3-19	Jul 22/2020
xcix	Nov 28/22	3-20	Jul 22/2020
c	Nov 28/22	3-21	Jul 31/12
ci	Nov 28/22	3-22	Oct 30/15
cii	Nov 28/22	3-23	Oct 30/15
ciii	Nov 28/22	3-23.1	Oct 30/15
civ	Nov 28/22	3-23.2	Oct 30/15
cv	Nov 28/22	3-24	Jul 31/12
cvi	Jul 22/2020	3-25	Dec 3/19
1-1	Jul 31/12	3-25.1	Feb 1/13
1-1.1	Dec 20/13	3-25.2	Feb 1/13
1-1.2	Nov 28/22	3-25.3	Feb 1/13
1-2	Sep 27/18	3-25.4	Feb 1/13
1-3	Sep 27/18	3-25.5	Feb 1/13
1-4	Sep 27/18	3-25.6	Feb 1/13
2-1	Dec 20/13	3-25.7	Feb 1/13
2-1.1	Dec 20/13	3-25.8	Feb 1/13

UNCONTROLLED COPY WHEN DOWNLOADED OR PRINTED

Visit www.enstromhelicopter.com for instructions to order an original manual and to register for email notification of updates.

EFFECTIVE PAGE LIST

Page	Date	Page	Date
3-25.9	Feb 1/13	3-63	Jul 31/12
3-25.10	Feb 1/13	3-64	Sep 2/16
3-25.11	Feb 1/13	3-65	Jul 31/12
3-25.12	Oct 30/15	3-66	Sep 2/16
3-25.13	Feb 1/13	3-67	Sep 2/16
3-25.14	Feb 1/13	3-68	Dec 3/19
3-26	Feb 1/13	3-69	Jul 31/12
3-27	Feb 1/13	3-70	Jul 31/12
3-28	Dec 3/19	3-71	Oct 30/15
3-29	Jul 31/12	3-72	Jul 31/12
3-30	Feb 1/13	3-73	Jul 31/12
3-31	Oct 30/15	3-74	Dec 3/19
3-32	Oct 30/15	3-75	Feb 1/13
3-33	Sep 2/16	3-76	Dec 3/19
3-34	May 9/18	3-77	Feb 1/13
3-35	May 9/18	3-78	Dec 3/19
3-36	Sep 2/16	3-79	Dec 3/19
3-37	Jul 22/2020	3-80	Sep 2/16
3-38	Sep 2/16	4-1	Nov 16/01
3-39	Sep 2/16	4-1.1	Dec 20/13
3-40	Jul 31/12	▌ 4-1.2	Nov 28/22
3-41	Oct 30/15	4-2	Jan 30/12
3-42	Oct 30/15	4-3	Dec 3/19
3-43	Jul 31/12	4-4	Oct 30/15
3-44	Sep 2/16	▌ 4-5	Nov 28/22
3-45	Jul 31/12	▌ 4-6	Nov 28/22
3-46	Jul 31/12	4-7	Jul 31/12
3-47	May 9/18	4-8	Jul 31/12
3-48	Jul 31/12	4-9	Oct 30/15
3-49	Dec 3/19	4-10	Jul 31/12
3-50	Dec 3/19	4-11	May 9/18
3-51	Oct 30/15	4-12	Jul 22/2020
3-52	Jul 31/12	4-13	Jul 31/12
3-53	Jul 31/12	4-14	Jul 31/12
3-54	Jul 31/12	4-15	Oct 30/15
3-55	Oct 30/15	4-16	Oct 30/15
3-56	Sep 2/16	4-17	Jul 31/12
3-57	Sep 2/16	4-18	Jul 31/12
3-58	Jul 31/12	4-19	Oct 30/15
3-59	Dec 3/19	4-20	Jul 31/12
3-60	Sep 2/16	5-1	Nov 16/01
3-61	Jul 31/12	5-1.1	Dec 20/13
3-62	Dec 20/13	▌ 5-1.2	Nov 28/22

UNCONTROLLED COPY WHEN DOWNLOADED OR PRINTED

Visit www.enstromhelicopter.com for instructions to order an original manual and to register for email notification of updates.

EFFECTIVE PAGE LIST

Page	Date	Page	Date
5-2	Nov 28/22	5-45	Feb 1/13
5-3	Nov 28/22	5-46	Oct 30/15
5-4	Nov 28/22	5-47	Oct 30/15
5-5	Nov 28/22	5-48	Feb 1/13
5-6	Nov 28/22	5-49	Feb 1/13
5-7	Nov 28/22	5-50	May 9/18
5-8	Nov 28/22	5-51	Oct 30/15
5-9	Nov 28/22	5-52	Feb 1/13
5-10	Nov 28/22	6-1	Nov 16/01
5-11	Nov 28/22	6-1.1	Dec 20/13
5-12	Nov 28/22	6-1.2	Nov 28/22
5-13	Feb 1/13	6-2	Sep 27/18
5-14	May 9/18	6-3	Dec 15/10
5-15	Oct 30/15	6-4	Nov 16/01
5-16	Feb 1/13	6-5	Sep 27/18
5-17	Oct 30/15	6-6	Sep 27/18
5-18	Oct 30/15	6-7	Oct 30/15
5-19	Feb 1/13	6-8	Jul 22/2020
5-20	Nov 28/22	6-9	Jul 22/2020
5-21	Nov 28/22	6-10	Jul 22/2020
5-22	Nov 28/22	6-11	Jul 22/2020
5-23	Nov 28/22	6-11.1	Jul 22/2020
5-24	Nov 28/22	6-11.2	Oct 30/15
5-25	Feb 1/13	6-11.3	Oct 30/15
5-26	Feb 1/13	6-11.4	Sep 27/18
5-27	May 9/18	6-11.5	Jul 22/2020
5-28	Nov 28/22	6-11.6	Jul 22/2020
5-29	Feb 1/13	6-11.7	Jul 22/2020
5-30	Nov 28/22	6-11.8	Oct 30/15
5-31	Nov 28/22	6-12	Jan 30/12
5-32	Feb 1/13	6-13	Sep 2/16
5-33	Feb 1/13	6-14	Dec 3/19
5-34	Feb 1/13	6-15	Dec 3/19
5-35	Dec 20/13	6-16	Dec 3/19
5-36	Dec 20/13	6-17	Jul 22/2020
5-37	Dec 20/13	6-17.1	Jul 22/2020
5-38	Dec 20/13	6-17.2	Jul 22/2020
5-39	Feb 1/13	6-18	Feb 1/13
5-40	Feb 1/13	6-19	Feb 1/13
5-41	Oct 30/15	6-19.1	Oct 30/15
5-42	Feb 1/13	6-19.2	Oct 30/15
5-43	Feb 1/13	6-20	Oct 30/15
5-44	Feb 1/13	6-21	Oct 30/15

UNCONTROLLED COPY WHEN DOWNLOADED OR PRINTED

Visit www.enstromhelicopter.com for instructions to order an original manual and to register for email notification of updates.

EFFECTIVE PAGE LIST

Page	Date	Page	Date
6-22	Jan 30/12	7-2.1	Oct 30/15
6-23	Sep 2/16	7-2.2	May 9/18
6-24	Sep 2/16	7-2.3	Jul 22/2020
6-25	Sep 2/16	7-3	Dec 20/13
6-26	Sep 2/16	7-3.1	May 9/18
6-27	Oct 30/15	7-3.2	May 9/18
6-28	Jan 30/12	7-3.3	Oct 30/15
6-29	Dec 3/19	7-4	Aug 13/07
6-30	Jan 30/12	7-5	Oct 30/15
6-31	Dec 3/19	7-6	Dec 3/19
6-32	Jan 30/12	7-7	Oct 30/15
6-33	Oct 30/15	7-8	Oct 30/15
6-34	Oct 30/15	7-9	Nov 16/01
6-35	Sep 2/16	7-10	Nov 16/01
6-35.1	Oct 30/15	7-11	Jan 30/12
6-36	Jul 29/11	7-12	Sep 27/18
6-37	Jul 31/12	7-13	Nov 16/01
6-38	Dec 20/13	7-14	Dec 20/13
6-39	Oct 30/15	7-15	Sep 27/18
6-40	Oct 30/15	7-16	Sep 27/18
6-41	Oct 30/15	7-17	Nov 11/02
6-41.1	Oct 30/15	7-18	Feb 1/13
6-42	Sep 27/18	7-19	Sep 2/16
6-43	Nov 28/22	7-20	Sep 2/16
6-44	Nov 28/22	7-20.1	Nov 11/02
6-45	Nov 28/22	7-20.2	Feb 1/13
6-46	Feb 1/13	7-21	Sep 2/16
6-47	Oct 30/15	7-22	Aug 13/07
6-48	Dec 20/13	7-23	Jan 30/12
6-49	Dec 3/19	7-24	Oct 30/15
6-50	Dec 3/19	7-25	Dec 3/19
6-51	Jan 30/12	7-26	Dec 3/19
6-52	Oct 30/15	7-26.1	Jul 22/2020
6-52.1	Oct 30/15	7-26.2	Oct 30/15
6-53	Oct 30/15	7-26.3	Dec 3/19
6-53.1	Oct 30/15	7-26.4	Jul 22/2020
6-54	Jan 30/12	7-27	Nov 16/01
6-55	Oct 30/15	7-27.1	Dec 3/19
6-56	Oct 30/15	7-27.2	Dec 3/19
7-1	Aug 13/07	7-28	Dec 3/19
7-1.1	Dec 20/13	7-29	Dec 3/19
7-1.2	Nov 28/22	7-30	Dec 3/19
7-2	Oct 30/15	7-31	Dec 3/19

UNCONTROLLED COPY WHEN DOWNLOADED OR PRINTED

Visit www.enstromhelicopter.com for instructions to order an original manual and to register for email notification of updates.

EFFECTIVE PAGE LIST

Page	Date	Page	Date
7-31.1	Dec 3/19	9-3	Dec 20/13
7-31.2	Dec 3/19	9-4	Sep 27/18
7-32	Aug 13/07	9-5	Feb 1/13
7-33	Oct 30/15	9-6	Feb 1/13
7-34	Oct 30/15	9-7	Jul 31/12
7-35	Oct 30/15	9-8	May 9/18
7-36	Oct 30/15	9-9	May 9/18
7-37	Jul 22/2020	9-10	Dec 3/19
7-38	Jul 22/2020	9-11	Dec 3/19
8-1	Jul 13/05	9-12	Feb 1/13
8-1.1	Dec 20/13	9-13	Sep 27/18
8-1.2	Nov 28/22	9-14	May 9/18
8-2	Oct 30/15	9-15	Nov 16/01
8-3	Oct 30/15	9-16	Oct 30/15
8-4	Nov 28/22	9-17	Oct 30/15
8-5	Nov 28/22	9-17.1	Oct 30/15
8-6	Oct 30/15	9-17.2	Jan 30/12
8-7	Oct 30/15	9-18	Oct 30/15
8-8	Jul 22/2020	9-19	Oct 30/15
8-9	May 9/18	9-19.1	Jul 31/12
8-10	Jul 31/12	9-19.2	Jul 31/12
8-11	Feb 1/13	9-20	Feb 1/13
8-12	Sep 2/16	9-21	May 9/18
8-13	Jul 22/2020	9-21.1	May 9/18
8-14	Sep 2/16	9-21.2	Jul 29/11
8-15	Sep 2/16	9-22	Feb 1/13
8-16	Jul 13/05	9-23	Oct 30/15
8-17	Jan 30/12	9-23.1	Oct 30/15
8-18	Jul 13/05	9-23.2	Oct 30/15
8-19	Dec 3/19	9-23.3	Oct 30/15
8-20	Dec 3/19	9-23.4	Jan 30/12
8-21	Aug 13/07	9-23.5	Oct 30/15
8-22	Jan 30/12	9-23.6	Oct 30/15
8-23	Dec 3/19	9-23.7	Oct 30/15
8-24	Jan 30/12	9-23.8	Oct 30/15
8-25	Jul 22/2020	9-24	Nov 16/01
8-26	Jul 22/2020	9-25	Dec 3/19
9-1	Nov 16/01	9-26	Dec 20/13
9-1.1	Dec 20/13	9-27	Nov 16/01
9-1.2	Nov 28/22	9-28	Nov 16/01
9-2	Feb 1/13	9-29	Jul 29/11
9-2.1	Feb 1/13	9-30	Nov 16/01
9-2.2	Jul 31/12	9-31	Oct 30/15

UNCONTROLLED COPY WHEN DOWNLOADED OR PRINTED

Visit www.enstromhelicopter.com for instructions to order an original manual and to register for email notification of updates.

EFFECTIVE PAGE LIST

Page	Date	Page	Date
9-32	Sep 2/16	10-17	Sep 2/16
9-33	Sep 2/16	10-18	Jul 31/12
9-33.1	Dec 20/13	10-19	Jul 31/12
9-33.2	Dec 20/13	10-20	Jan 30/12
9-34	Dec 15/10	▌10-21	Nov 28/22
9-35	Dec 3/19	10-22	Sep 2/16
9-36	Dec 3/19	10-23	Sep 2/16
9-37	Oct 30/15	10-24	Sep 2/16
9-38	Dec 3/19	10-24.1	Oct 30/15
9-39	Jul 22/2020	10-25	Sep 2/16
9-40	Oct 30/15	10-26	Sep 2/16
9-41	Oct 30/15	10-27	Sep 2/16
9-42	Oct 30/15	10-28	Sep 2/16
9-43	Oct 30/15	▌10-29	Nov 28/22
9-44	Oct 30/15	10-29.1	Sep 2/16
9-45	Oct 30/15	10-30	Jul 31/12
9-46	Oct 30/15	▌10-31	Nov 28/22
9-47	Oct 30/15	10-32	Jul 31/12
9-47.1	Oct 30/15	▌10-33	Nov 28/22
9-47.2	Oct 30/15	10-34	Jul 31/12
▌9-48	Nov 28/22	10-35	Feb 1/13
9-49	Sep 27/18	10-36	Jul 31/12
9-50	Oct 30/15	10-37	Feb 1/13
9-51	Sep 27/18	10-38	Jul 31/12
9-52	Jul 13/05	10-39	Jul 31/12
10-1	Nov 16/01	10-40	Jul 31/12
10-1.1	Dec 20/13	10-41	Dec 20/13
▌10-1.2	Nov 28/22	10-42	Jul 31/12
10-2	Sep 2/16	10-43	Feb 1/13
10-3	Sep 2/16	10-44	Jul 31/12
10-4	Jul 31/12	10-45	Jul 31/12
10-5	Jul 31/12	10-46	Sep 2/16
▌10-6	Nov 28/22	10-47	Jul 31/12
▌10-7	Nov 28/22	10-48	Jul 31/12
10-8	Sep 2/16	10-49	Dec 3/19
10-9	Sep 2/16	10-50	Jul 31/12
10-10	Jul 31/12	10-51	Dec 3/19
10-11	Jul 31/12	10-52	Dec 3/19
10-12	Jul 31/12	10-53	Jul 31/12
10-13	Feb 1/13	10-54	Jul 31/12
▌10-14	Nov 28/22	10-55	Dec 20/13
10-15	Jul 13/05	10-56	Jul 31/12
10-16	Sep 2/16	10-57	Jul 31/12

UNCONTROLLED COPY WHEN DOWNLOADED OR PRINTED

Visit www.enstromhelicopter.com for instructions to order an original manual and to register for email notification of updates.

EFFECTIVE PAGE LIST

Page	Date	Page	Date
10-58	Jul 31/12	10-91	Jul 31/12
10-59	Dec 3/19	10-92	May 9/18
10-60	Oct 30/15	10-93	Jul 31/12
10-61	Jul 31/12	10-94	Jul 31/12
10-62	Jul 31/12	10-95	Jul 31/12
10-63	Oct 30/15	10-96	Oct 30/15
10-64	Oct 30/15	10-97	Jul 31/12
10-65	Jul 31/12	10-98	Jul 31/12
10-66	Jul 31/12	10-99	Jul 31/12
10-67	Jul 31/12	10-100	Dec 20/13
10-68	Jul 31/12	10-101	Dec 3/19
10-69	Feb 1/13	10-102	Dec 3/19
10-70	Oct 30/15	10-103	Jul 31/12
10-71	Oct 30/15	10-104	Jul 31/12
10-72	Jul 31/12	10-105	May 9/18
10-73	Dec 20/13	10-106	Jul 31/12
10-74	Jul 31/12	10-107	May 9/18
10-75	Oct 30/15	10-108	Jul 31/12
10-76	Jul 31/12	10-109	May 9/18
10-77	Oct 30/15	10-110	Jul 31/12
10-78	Jul 22/2020	10-111	Jul 31/12
10-79	Jul 22/2020	10-112	Feb 1/13
10-80	Oct 30/15	10-113	Feb 1/13
10-81	Oct 30/15	10-114	Jul 31/12
10-82	Oct 30/15	10-115	Jul 31/12
10-83	Oct 30/15	10-116	Feb 1/13
10-83.1	Dec 20/13	10-117	Jul 31/12
10-83.2	Dec 20/13	10-118	Jul 31/12
10-84	Feb 1/13	10-119	Oct 30/15
10-85	Feb 1/13	10-120	Feb 1/13
10-86	Feb 1/13	10-121	Feb 1/13
10-86.1	Feb 1/13	10-122	Feb 1/13
10-86.2	Feb 1/13	10-123	Feb 1/13
10-86.3	Oct 30/15	10-124	Oct 30/15
10-86.4	Oct 30/15	10-125	Jul 31/12
10-86.5	Feb 1/13	10-126	Oct 30/15
10-86.6	Oct 30/15	10-127	Jul 31/12
10-86.7	Feb 1/13	10-128	Jul 31/12
10-86.8	Oct 30/15	10-129	Jul 31/12
10-87	Jul 31/12	10-130	Jul 31/12
10-88	Jul 31/12	10-131	Jul 31/12
10-89	Oct 30/15	10-132	Jul 31/12
10-90	May 9/18	10-133	Jul 31/12

UNCONTROLLED COPY WHEN DOWNLOADED OR PRINTED

Visit www.enstromhelicopter.com for instructions to order an original manual and to register for email notification of updates.

EFFECTIVE PAGE LIST

Page	Date	Page	Date
10-134	Jul 31/12	B-7	Jul 22/2020
11-1	Nov 16/01	B-8	Jul 22/2020
11-1.1	Dec 20/13	B-9	Jul 22/2020
▌ 11-1.2	Nov 28/22	B-10	Jul 22/2020
11-2	Nov 16/01	B-11	Jul 22/2020
11-3	Oct 30/15	B-12	Jul 22/2020
11-4	Oct 30/15	B-13	Jul 22/2020
11-5	Oct 30/15	B-14	Jul 22/2020
11-6	Oct 30/15	B-15	Jul 22/2020
11-7	Nov 16/01	B-16	Jul 22/2020
11-8	Jul 31/12		
11-9	Oct 30/15		
11-9.1	Oct 30/15		
11-9.2	Jul 31/12		
11-10	Nov 16/01		
11-11	Oct 30/15		
11-12	Jan 30/12		
11-13	Jan 30/12		
11-14	Dec 3/19		
11-15	Jan 30/12		
11-16	Aug 16/13		
11-17	Jan 30/12		
11-18	Oct 30/15		
11-19	Jan 30/12		
11-20	Jan 30/12		
11-21	Oct 30/15		
11-22	Jul 22/2020		
11-23	Oct 30/15		
11-24	Jul 31/12		
A-1	Jan 30/12		
A-2	Sep 20/13		
▌ A-3	Nov 28/22		
A-4	Oct 30/15		
A-5	Oct 30/15		
A-6	Dec 3/19		
A-7	Dec 3/19		
A-8	Sep 20/13		
▌ B-1	Nov 28/22		
B-2	Jul 22/2020		
B-3	Jul 22/2020		
B-4	Jul 22/2020		
B-5	Jul 22/2020		
B-6	Jul 22/2020		

UNCONTROLLED COPY WHEN DOWNLOADED OR PRINTED

Visit www.enstromhelicopter.com for instructions to order an original manual and to register for email notification of updates.

PART NUMBER INDEX

Part Number	Figure	Item	Part Number	Figure	Item
008-00041-0001	10-36	–	020-986-001	5-3	20
010-00188-03	10-37	10	030-01094-0077	10-36	–
01-0770028-05	10-30	1	030-01107-0048	10-36	–
01-0770119-15	10-1	31	034921-01	5-12	–
01-0770119-15	10-2	31	038088-08	6-9	35
01-0770119-15	10-3	24	038088-08-80	6-9	35
01-0770119-15	10-4	26	0402-005	6-1	16
01-0770119-15	10-5	5	047-05860-0001	10-36	–
01-0770119-15	10-6	5	050-01780-0003	10-36	6
01-0771424-20	10-28	5	0660-1055-0071	10-36	1
01-0790006-01	10-30	4	089-02013-0037	10-36	–
01-0790006-01	10-31	–	089-02051-0024	10-36	–
01-0790006-01	3-8	26	089-02191-0022	10-36	–
01-0790006-01	App A	–	089-02353-0001	10-36	–
01-0790006-03	10-30	4	089-05903-0007	10-36	–
01-0790006-03	10-31	–	089-05907-0012	10-36	–
01-0790006-03	3-8	25	089-06012-0008	10-36	–
01-0790006-03	App A	–	08DU	App A	–
01-0790340-03	10-30	4	08DU08	9-11	15
01-0790340-03	10-32	10	091-00072-0003	10-36	–
01-0790340-03	3-8	26	09-DU-12	9-3	22
01-0790340-04	10-30	4	#1	5-5	55
01-0790340-04	10-32	11	1-480319-0	6-1	–
01-0790340-04	3-8	25	1/2 X8	App A	–
01-1030-H-A-P	10-29	40	1/4 Harper	6-12	30
01-1030-H-A-P Rev A	10-29	40	1/4 Harper	8-7	27
01-1030-H-A-P Rev B	10-29	40	1/4 Harper	9-10	3
01-1030-H-A-P Rev C	10-29	40	1/4 Harper	9-8	10
01-691-04	9-15	27	1/4 Harper	9-8	21
01-691-05	9-13	10	1/8 X 832	11-5	90
02-0250276-00	10-31	8	1/8 X 832	5-8	–
02-0250276-00	App A	–	1/8X832	5-11	290
02-0350259-00	10-31	1	10065	App A	–
02-0350259-00	App A	–	102	3-3	–
02-0350260-00	10-31	3	102-00007	7-8	38
02-0350260-00	App A	–	102-00007	7-8.1	34

UNCONTROLLED COPY WHEN DOWNLOADED OR PRINTED

Visit www.enstromhelicopter.com for instructions to order an original manual and to register for email notification of updates.

PART NUMBER INDEX

Part Number	Figure	Item
1040	10-1	5
1040	10-2	5
1040	10-3	5
1040	10-4	5
1053	11-1	27
105CPOLYKEN	3-19	–
10-796-00	11-4	14
10-796-00	11-5	340
10-DU-10	6-7.2	21
10-DU-10	9-4	3
10-DU-10	9-4	5
1102	7-8	27
1102	7-8.1	24
11052	7-2	5
11052	7-2	5
1117067-05	3-18	29
1117067-07	3-18	28
1157	11-6	40
11-691-04	9-15	24
11-691-05	9-13	14
1-172165-9	10-4	32
11TS15-2	10-1	23
11TS15-2	10-2	23
11TS15-2	10-7	2
11TS15-2	10-8	2
11TS15-2	10-9	2
11TS15-2	10-9	2
1219-4200-Z3Y	3-2	–
1219-4200-Z3Y	3-2	–
1219-4200-Z3Y	3-2	–
1219-4200-Z3Y	3-2	–
1219-4200-Z3Y	6-11	18
1219-4200-Z3Y	6-12	20
1219-4200-Z3Y	App A	–
1238716	5-2	260
124F003-4CR0210	6-1	64
12500750-125B	8-5	14
13241-LDS	7-8	25
13AT401-T2	9-6	30
13AT401-T2	9-7	24
13AT401-T2	9-7.1	14
13AT401-T2	9-7.2	14
14-0050508-27	10-32	9
14399-001	10-1	18
14399-001	10-2	18
14399-001	10-3	18
14399-001	10-4	18
14399-002	10-1	17
14399-002	10-2	17
14399-002	10-3	17
14399-002	10-4	17
14399-003	10-1	16
14399-003	10-2	16
14399-003	10-3	16
14399-003	10-4	16
1-480303-0	10-37	80
1-480305-0	10-37	90
1-480318-0	10-1	–
1-480318-0	10-1	–
1-480318-0	10-1	–
1-480318-0	10-1	–
1-480318-0	10-2	–
1-480318-0	10-2	–
1-480318-0	10-2	–
1-480318-0	10-2	–
1-480318-0	10-2	–
1-480318-0	10-3	–
1-480318-0	10-3	–
1-480318-0	10-4	–
1-480318-0	10-4	–
1-480319-0	10-1	–
1-480319-0	10-1	–
1-480319-0	10-1	–
1-480319-0	10-1	–

UNCONTROLLED COPY WHEN DOWNLOADED OR PRINTED

Visit www.enstromhelicopter.com for instructions to order an original manual and to register for email notification of updates.

PART NUMBER INDEX

Part Number	Figure	Item
1-480319-0	10-2	–
1-480319-0	10-2	–
1-480319-0	10-2	–
1-480319-0	10-2	–
1-480319-0	10-2	–
1-480319-0	10-29	–
1-480319-0	10-3	–
1-480319-0	10-3	–
1-480319-0	10-4	–
1-480319-0	10-4	–
1-480319-0	5-7	–
1-480319-0	7-9	–
1-480424-0	6-7.3	70
1-480426-0	10-18	–
14809	7-1	2
14809	7-1.1	12
14809	App A	–
1495	10-1	–
150SG1009-5	6-1	–
150SG1009-5	6-1	–
150SG1040	6-1	53
150SG1040	6-1	53
150SG1108	6-1	52
150SG1108	6-1	52
150SG117Q-3	6-1	51
150SG117Q-3-1	6-1	51
150SG117Q-4	6-1	51
150SG117Q-4-1	6-1	51
1539-001	7-11	14
1540	7-8	–
1540	7-8.1	–
1-604102-1	10-18	–
1-604102-1	10-18	–
1-604102-1	10-19	–
16-1	8-7	30
1637-B	7-10	10
1637-B	8-1	35
1637-B	8-2	39
1637-B	9-12	12
1641-B	8-1	28
1641-B	8-3	20
1641-B	9-11	6
1641-B	9-13	3
1650	8-3	20
1650	8-7	21
16DU16	9-12	4
170363-1	10-17	19
170363-1	10-4	33
170364-1	10-17	19
1-72165-9	10-17	18
172233-1	10-17	18
17240	App A	–
1740001-01	6-9	34
1741125	6-9	–
1743629-01	5-12	–
1743640-01	5-12	60
1743645-01	5-12	–
1743645-02	5-12	70
1756-2	10-14	7
18-200	10-1	–
18-200	10-2	–
18-200	10-3	–
18-200	10-4	–
18-200	10-4	–
18-200	10-4	–
18-200	10-4	–
18-215	10-1	–
18-215	10-2	–
18-215	10-3	–
18-215	10-4	–
18-215	10-4	–
18-215	10-4	–
18-215	10-4	–
18-DU-12	9-6	8

UNCONTROLLED COPY WHEN DOWNLOADED OR PRINTED

Visit www.enstromhelicopter.com for instructions to order an original manual and to register for email notification of updates.

PART NUMBER INDEX

Part Number	Figure	Item
18-DU-12	9-7	8
18050-42	7-9	28
1/8 X 1/16 FG-S	7-9	–
1911-B	7-4	9
1911-B	7-6	14
1911-B	7-6.1	13
1911-B	8-1	34
19-170049-009	10-31	12
19-170049-009	App A	–
19-170049-010	10-32	8
19754	8-2	43
1B7536	7-8	5
1SE1	10-23	7
1SE1	6-1	87
2/0	6-3	66
2000653-001	11-6	50
20012S	6-1	47
20020S	4-5	–
20020S	4-5	–
20020S	4-5	–
20020S	4-5	–
20020S	4-5	–
20020S	4-5	–
20044S	6-1	105
2-008-S604-70	10-25	–
2-008-S604-70	10-25	–
2-011	10-27	10
2-015	4-4	30
2-018	7-11	4
2-025	8-5	4
2-025	8-5	11
2-029	7-9	21
2-029	8-3	14
2-032	8-2	45
2-041	7-1	10
20526	7-6	11
20526	7-6.1	10
20526	App A	–
206-061-505-003	6-9	1
208	7-4	8
210A155	9-3	8
2-131	4-4	15
2-133	8-3	15
2-137	8-5	15
2-141	7-1	8
2-141	7-1.1	17
2-141	7-2	4
2-141	7-2	4
218-901-019	10-2	9
219N04X02	10-34	1
21FA-540	7-11	13
21FA-540	7-8	–
21FA-540	7-9	–
2-212	8-2	23
2212000	10-4	–
2-218	4-4	5
22-370-150	10-16	8
22-370-150	10-17	9
22-370-200	10-17	9
229001	10-10	–
229001	11-6	–
229001	11-6	–
229001	11-6	–
229002	10-10	–
229003	10-10	–
229007	10-10	–
22NA17A-02	3-13	31
22NA1-82	3-8	39
22NA1-82BC	3-8	40
22NA27-22-02	10-13	5
22NA27-22-02	6-3	46
22-NA27-68-02	10-13	5
23052351	6-1	–
23052363	3-20	90

UNCONTROLLED COPY WHEN DOWNLOADED OR PRINTED

Visit www.enstromhelicopter.com for instructions to order an original manual and to register for email notification of updates.

PART NUMBER INDEX

Part Number	Figure	Item	Part Number	Figure	Item
23053995	7-1	16	268-N-04X02	App A	–
23053995	7-2	10	269N 4X2	App A	–
23054604	6-1	23	269N04X02	10-34	5
23063426	6-1	41	269-N-04X02	App A	–
23064565	6-1	60	269-N-04X04	10-27	6
23113DH	5-8	38	27539	7-4	6
23121DH	5-8	6	27539	7-5	11
2335-265	10-20	12	28-00014-1	3-20	10
23S-094-075	3-6	100	28-00015-1	3-20	100
24004-71-71	11-6	120	28-01041-3	6-10	22
24004TR71	11-6	180	280-114508-11	3-2	11
24914	7-4	3	28-11121-4	10-33	10
24914	7-5	3	28-11121-4	10-33	19
2523184	6-6	19	28-11121-7	10-33	6
259 N4	App A	–	28-11215-1	3-9	17
259N04	10-27	5	28-11215-11	3-9	17
259N04	10-34	2	28-11217-1	3-9	16
259N04	App A	–	28-11217-3	3-9	16
259-N-04X02	App A	–	28-11227-13	3-13	5
261N04X02	10-34	–	28-11227-13	3-13	10
261N04X02	10-34	–	28-11227-15	3-13	6
262N4	10-27	–	28-11227-15	3-13	8
262N4	10-27	–	28-11227-17	3-13	6
262N4	10-27	–	28-11227-19	3-13	–
264N 4	App A	–	28-11227-19	3-13	–
264N04	10-34	3	28-11227-21	3-13	8
264N04	App A	–	28-11227-23	3-13	–
264-N-04X02	App A	–	28-11227-23	3-13	–
264N4	10-27	4	28-11231-11	3-13	–
265N 4	App A	–	28-11233-1	3-13	15
265N04	App A	–	28-11233-13	3-13	–
265-N-04X02	App A	–	28-11233-5	3-13	18
267-1000–002	10-1	9	28-11236-11	3-13	19
267-1000–002	10-2	9	28-11236-13	3-13	13
268N 4X2	App A	–	28-11236-15	3-13	12
268N04X02	10-34	1	28-11236-17	3-13	20
268N04X02	App A	–	28-11236-19	3-13	22

UNCONTROLLED COPY WHEN DOWNLOADED OR PRINTED

Visit www.enstromhelicopter.com for instructions to order an original manual and to register for email notification of updates.

PART NUMBER INDEX

Part Number	Figure	Item	Part Number	Figure	Item
28-11236-21	3-13	14	28-13120-1	7-8.1	4
28-11237-11	3-13	33	28-13122-3	7-8.2	10
28-11237-11	3-8	38	28-13122-993	7-8.2	–
28-11238-1	3-13	23	28-13137-11	7-8	26
28-11238-11	3-13	–	28-13142-1	7-6	6
28-11238-13	3-13	26	28-13142-1	7-8	–
28-11239-1	3-13	1	28-13145-1	7-11	–
28-11239-101	3-13	11	28-13145-1	8-5	30
28-11239-29	3-13	–	28-13146-1	7-8	–
28-11239-3	3-13	7	28-13146-1	7-8.1	–
28-11239-31	3-13	–	28-13148-1	7-8	12
28-11239-31	3-13	–	28-13148-1	7-8.1	9
28-11239-35	3-13	–	28-13149-1	7-8	13
28-11239-35	3-13	–	28-13149-1	7-8.1	10
28-11239-37	3-13	–	28-13152-11	7-8	–
28-11239-39	3-13	–	28-13152-11	7-8.1	–
28-11239-9	3-13	9	28-13152-13	7-8	31
28-11241-13	3-13	–	28-13152-13	7-8.1	28
28-11241-3	3-13	21	28-13180-11	7-6	8
28-11711-15	3-4	150	28-13180-11	7-6.1	7
28-11711-15	3-4	170	28-13184-11	7-6	15
28-11712-15	3-4	80	28-13184-11	7-6.1	14
28-11714-11	3-4	220	28-13322-11	7-6	12
28-11715-11	3-3	10	28-13322-11	7-6.1	11
28-12319-1	3-2	–	28-13323-11	7-6	10
28-12319-1	3-2	–	28-135003-11	7-11	3
28-12356-1	6-2	2	28-13511-11	7-11	21
28-12400-23	6-1	73	28-13511-13	7-11	21
28-12420-15	5-12	160	28-13515-3	7-11	5
28-12429-9	5-2	410	28-13525-9	7-11	1
28-12460-1	5-12	120	28-13531-11	7-11	16
28-12460-1	5-9	–	28-13532-11	7-11	19
28-125	10-11	3	28-13605-4	7-10	11
28-13005-1	7-7	2	28-13605-5	7-10	11
28-13107-15	7-8	18	28-13605-6	7-10	11
28-13107-15	7-8.1	15	28-13605-7	7-10	11
28-13120-1	7-8	7	28-13605-8	7-10	11

UNCONTROLLED COPY WHEN DOWNLOADED OR PRINTED

Visit www.enstromhelicopter.com for instructions to order an original manual and to register for email notification of updates.

PART NUMBER INDEX

Part Number	Figure	Item
28-13607-1	7-11	22
28-13611-13	7-10	6
28-13611-15	7-10	6
28-13621-13	6-10	25
28-13621-13	7-10	17
28-14004-1	8-1	40
28-14004-1	8-2	47
28-14006-11	8-1	30
28-14006-11	8-2	35
28-14006-13	8-1	30
28-14006-13	8-2	35
28-14006-15	8-1	30
28-14006-15	8-2	35
28-14006-17	8-1	30
28-14006-17	8-2	35
28-14006-19	8-1	30
28-14006-19	8-2	35
28-14006-3	8-1	30
28-14006-3	8-2	35
28-14006-5	8-1	30
28-14006-5	8-2	35
28-14006-7	8-1	30
28-14006-7	8-2	35
28-14006-9	8-1	30
28-14006-9	8-2	35
28-14007-3	8-3	38
28-14008-1	8-1	39
28-14008-1	8-2	46
28-14009-1	8-1	37
28-14009-1	8-2	42
28-14009-10	8-2	42
28-14009-15	8-2	42
28-14009-2	8-1	37
28-14009-2	8-2	42
28-14009-3	8-1	37
28-14009-3	8-2	42
28-14009-5	8-1	37
28-14009-5	8-2	42
28-14019-10	8-4	3
28-14019-3	8-4	3
28-14019-5	8-4	3
28-14019-6	8-4	3
28-14019-7	8-4	3
28-14019-8	8-4	3
28-14100-9	8-3	37
28-14109-1	8-3	59
28-14110-1	8-3	–
28-14110-2	8-3	–
28-14110-3	8-3	–
28-14117-1	8-1	22
28-14117-11	8-1	22
28-14117-13	8-2	26
28-14141-13-Kit	8-3	58
28-14141-913	8-3	58
28-14202-1	8-1	4
28-14202-1	8-2	4
28-14207-101	9-13	1
28-14207-9	9-13	1
28-14219-3	8-1	–
28-14219-5	8-2	–
28-14219-7	8-1	–
28-14219-901	8-1	–
28-14219-903	8-2	–
28-14223-1	8-1	11
28-14223-1	8-2	11
28-14224-1	8-1	7
28-14224-1	8-2	7
28-14224-3	8-1	15
28-14224-5	8-1	15
28-14224-5	8-2	15
28-14227-1	8-1	20
28-14227-1	8-2	24
28-14227-11	8-4	6
28-14228-1	8-1	19

UNCONTROLLED COPY WHEN DOWNLOADED OR PRINTED

Visit www.enstromhelicopter.com for instructions to order an original manual and to register for email notification of updates.

PART NUMBER INDEX

Part Number	Figure	Item	Part Number	Figure	Item
28-14231-1	8-3	5	28-14278-1	8-3	46
28-14233-3	8-4	1	28-14279-3	8-3	18
28-14234-901	8-3	1	28-14280-3	8-1	9
28-14234-909	8-3	–	28-14280-5	8-1	9
28-14235-1	8-1	38	28-14280-5	8-2	9
28-14236-1	8-1	24	28-14281-3	8-1	13
28-14236-1	8-1	29	28-14281-5	8-1	13
28-14236-1	8-2	28	28-14281-5	8-2	13
28-14236-1	8-2	34	28-14282-13	8-3	1
28-14236-1	8-4	4	28-14283-1	8-3	41
28-14239-1	8-3	34	28-14290-3	8-1	12
28-14239-5	8-3	34	28-14290-3	8-2	12
28-14240-1	8-3	2	28-14290-5	8-1	12
28-14244-1	8-1	8	28-14290-5	8-2	12
28-14244-1	8-2	8	28-14290-7	8-1	12
28-14250-1	8-1	–	28-14290-7	8-2	12
28-14250-1	8-2	–	28-14290-9	8-1	12
28-14250-1	9-13	23	28-14290-9	8-2	12
28-14250-3	9-13	24	28-14293-11	8-3	22
28-14251-1	8-1	25	28-14293-13	8-3	22
28-14251-1	8-2	29	28-14293-7	8-3	22
28-14251-2	8-1	26	28-14293-9	8-3	22
28-14251-2	8-2	30	28-14311-1	8-3	7
28-14252-1	8-1	10	28-14313-1	8-3	13
28-14252-1	8-1	14	28-14320-15	8-3	21
28-14256-1	8-1	31	28-14335-1	8-3	23
28-14256-1	8-2	36	28-14356-5	8-5	–
28-14257-1	8-1	32	28-14357-3	8-5	1
28-14257-1	8-2	37	28-14357-5	8-5	1
28-14259-1	8-6	7	28-14358-4	8-5	5
28-14259-3	9-13	20	28-14358-4	8-5	12
28-14261-1	8-3	10	28-14359-11	8-1	10
28-14262-1	9-13	4	28-14359-11	8-2	10
28-14265-3	8-5	10	28-14359-15	8-5	2
28-14270-1	8-3	19	28-14359-17	8-5	3
28-14276-1	8-5	2	28-14359-19	8-1	14
28-14277-1	8-5	3	28-14359-19	8-2	14

UNCONTROLLED COPY WHEN DOWNLOADED OR PRINTED

Visit www.enstromhelicopter.com for instructions to order an original manual and to register for email notification of updates.

PART NUMBER INDEX

Part Number	Figure	Item	Part Number	Figure	Item
28-14366-1	8-5	21	28-150063-11	8-7	12
28-14367-7	8-5	22	28-150063-13	8-7	12
28-14368-2	7-8	29	28-150067-15	8-7	2
28-14368-2	7-8.1	26	28-150074-11	8-7	1
28-14368-2	8-5	23	28-150074-13	8-7	1
28-14369-1	8-5	27	28-150076-1	8-7	9
28-14370-17	8-5	6	28-150076-13	8-7	7
28-14374-13	8-5	29	28-150076-15	8-7	4
28-14374-15	8-5	29	28-150076-17	8-7	3
28-14375-103	8-5	–	28-150076-19	8-7	6
28-14375-107	8-5	–	28-150078-10	8-7	8
28-14375-906	8-5	–	28-150078-12	8-7	8
28-14375-907	8-5	–	28-150078-13	8-7	8
28-14375-908	8-5	–	28-150078-15	8-7	8
28-14381-1	8-3	–	28-150079-7	8-7	–
28-14381-3	8-3	–	28-150079-901	8-7	–
28-14381-901	8-3	28	28-15030-1	8-7	29
28-14381-902	8-3	26	28-15033-1	8-7	18
28-14381-903	8-3	1	28-15033-11	8-7	18
28-14382-19	8-3	32	28-15033-15	8-7	18
28-14382-21	8-3	27	28-15033-17	8-7	18
28-14383-13	8-3	–	28-15033-5	8-7	18
28-14384-13	8-3	–	28-16042-11	9-6	9
28-14385-13	8-3	1	28-16042-11	9-7	9
28-14385-15	8-3	1	28-16043-11	9-12	10
28-14386-3	8-3	18	28-16043-13	9-12	35
28-14386-5	8-3	18	28-16043-15	9-12	38
28-14387-13	8-3	–	28-16043-19	9-12	10
28-14389-11	8-3	–	28-16106-2	9-12	5
28-14389-13	8-3	–	28-16108-11	9-12	7
28-14390-11	8-5	8	28-16108-2	9-12	7
28-150001-9	8-7	19	28-16109-1	9-12	19
28-150044-5	8-7	20	28-16109-11	9-12	19
28-150055-1	8-7	14	28-16109-13	9-12	40
28-150055-13	8-7	14	28-16112-13	9-12	13
28-150055-15	8-7	14	28-16112-15	9-12	13
28-150060-11	8-7	11	28-16112-17	9-12	13

UNCONTROLLED COPY WHEN DOWNLOADED OR PRINTED

Visit www.enstromhelicopter.com for instructions to order an original manual and to register for email notification of updates.

PART NUMBER INDEX

Part Number	Figure	Item	Part Number	Figure	Item
28-16113-1	9-12	15	28-16253-6	9-12	31
28-16116-1	9-11	18	28-16253-8	9-12	31
28-16116-11	9-11	18	28-16258-1	9-8	20
28-16119-5	9-11	7	28-16260-1	9-12	1
28-16124-1	9-10	11	28-16263-5	9-11	13
28-16125-3	9-12	9	28-16264-1	9-12	2
28-16125-4	9-12	9	28-16308-1	9-15	19
28-16125-5	9-12	9	28-16310-2	9-15	18
28-16126-1	9-12	14	28-16311-1	9-15	39
28-16129-2	9-10	10	28-16313-1	9-15	1
28-16143-1	9-12	32	28-16314-1	9-15	3
28-16143-3	9-12	32	28-16319-1	9-15	2
28-16156-1	9-2	–	28-16331-1	9-15	6
28-162004-11	9-8	28	28-16332-1	9-14	–
28-16201-1	9-3	19	28-16332-1	9-14	–
28-16203-1	9-2	37	28-16332-1	9-14	–
28-16203-1	9-8	26	28-16332-1	9-14	–
28-16206-11	9-13	12	28-16336-11	9-13	22
28-16215-1	9-7.1	34	28-16341-1	9-14	53
28-16215-1	9-7.2	27	28-16345-1	9-15	–
28-16219-1	9-10	4	28-16345-11	9-15	–
28-16222-1	9-8	28	28-16348-1	4-2	23
28-16223-19	9-11	17	28-16352-1	9-14	44
28-16224-5	9-11	19	28-16353-3	9-15	30
28-16225-19	9-11	20	28-16353-5	9-15	35
28-16226-5	9-11	16	28-16374-1	9-15	16
28-16227-3	9-11	12	28-16386-1	9-12	6
28-16229-13	9-8	29	28-16391-1	9-15	23B
28-16230-1	9-8	27	28-16391-3	9-15	23A
28-16231-1	9-8	31	28-16391-5	9-15	23A
28-16232-1	9-8	32	28-16392-13	9-15	12
28-16234-6	9-8	7	28-16394-11	9-15	7
28-16236-1	9-8	16	28-16395-1	9-15	17
28-16237-1	9-8	14	28-16396-2	9-15	–
28-16238-1	9-8	18	28-16397-11	9-15	13
28-16238-3	9-8	–	28-16398-901	9-15	23C
28-16239-4	9-8	9	28-16399-11	7-11	18

UNCONTROLLED COPY WHEN DOWNLOADED OR PRINTED

Visit www.enstromhelicopter.com for instructions to order an original manual and to register for email notification of updates.

PART NUMBER INDEX

Part Number	Figure	Item	Part Number	Figure	Item
28-164043-11	6-6	22	28-16611-15	9-3	25
28-16476-2	6-1	30	28-16613-3	9-3	28
28-16524-1	9-9	15	28-16614-5	9-3	32
28-16524-3	7-8	32	28-16615-1	9-3	27
28-16524-3	7-8.1	29	28-16617-1	9-3	43
28-16524-3	9-1	31	28-16620-1	9-3	2
28-16524-3	9-11	14	28-16623-1	9-3	42
28-16524-3	9-12	24	28-16624-11	9-3	34
28-16524-3	9-9	15	28-16625-1	9-2	36
28-16524-4	9-1	31	28-16628-1	9-3	26
28-16524-4	9-11	14	28-16630-3	9-3	1
28-16524-4	9-12	24	28-16630-4	9-3	1
28-16524-4	9-9	15	28-16632-1	9-3	12
28-16524-5	7-8	32	28-16633-1	9-3	7
28-16524-5	7-8.1	29	28-16636-5	9-3	–
28-16524-5	9-1	31	28-17101-1	4-1	32
28-16524-5	9-11	14	28-17101-7	4-1	32
28-16524-5	9-12	24	28-17123-1	4-4	22
28-16524-5	9-9	15	28-17123-11	4-4	22
28-16524-6	9-1	31	28-17144-1	4-4	2
28-16524-6	9-11	14	28-17144-5	4-4	2
28-16524-6	9-12	24	28-17145-1	4-4	8
28-16524-6	9-9	15	28-17146-7	4-4	1
28-16524-7	9-1	31	28-17146-907	4-4	–
28-16524-7	9-11	14	28-17147-3	4-4	14
28-16524-7	9-12	24	28-17149-1	4-4	6
28-16524-7	9-9	15	28-17150-1	3-1	340
28-16524-8	9-1	31	28-17150-1	4-1	34
28-16524-8	9-11	14	28-17151-1	4-4	7
28-16524-8	9-12	24	28-17155-1	4-4	11
28-16524-8	9-9	15	28-17156-1	4-4	10
28-16601-1	9-3	23	28-17156-3	4-4	10
28-16603-1	9-3	24	28-17157-1	4-4	9
28-16604-1	9-3	21	28-17164-11	3-20	80
28-16608-13	9-3	15	28-17164-11	4-2	27
28-16609-1	9-3	4	28-17164-13	3-20	20
28-16610-1	9-3	5	28-17200-15	3-9	8

UNCONTROLLED COPY WHEN DOWNLOADED OR PRINTED

Visit www.enstromhelicopter.com for instructions to order an original manual and to register for email notification of updates.

PART NUMBER INDEX

Part Number	Figure	Item
28-17203-1	3-10	17
28-17203-11	3-10	17
28-17205-1	3-9	6
28-17206-11	3-10	15
28-17206-13	3-10	14
28-17206-13	3-9	7
28-17206-17	3-10	12
28-17206-19	3-10	16
28-17208-11	3-10	4
28-17308-1	8-7	22
28-18009-13	3-20	120
28-18009-17	3-20	120
28-18009-2	3-20	120
28-18009-21	3-20	120
28-18009-3	3-20	120
28-19048-11	10-23	12
28-19061-11	3-20	130
28-20107-11	3-20	40
28-21009-13	10-28	6
28-22184-11	10-38	110
28-22184-11	10-39	100
28-41	10-11	2
286377	10-10	1
286377	11-6	–
286377	11-6	–
286377	11-6	–
28NBC2040YZP	8-1	23
28NBC2040YZP	8-1	36
28NBC2040YZP	8-2	27
2D7310	7-8	17
2D7310	7-8.1	14
2D8934	7-8	17
2D8934	7-8.1	14
3/8 Harper	3-7	5
3/8 Harper	8-3	56
3/8 Harper	9-12	23
3/8 Harper	9-8	30
3/8-6R	3-21	–
300-097	6-4	–
3001-127-470Sep 27/180C-6.3M	10-22	1
3001-127-470Sep 27/180C-6.3M	App A	–
3001-127-47018	10-22	1
3001-127-47018	App A	–
300-166	6-5	13
313	10-1	–
313	10-1	–
313	10-1	–
313	10-2	–
313	10-2	–
313	10-2	–
313	10-3	–
313	10-3	–
313	10-3	–
313	10-4	–
313	10-4	–
313	10-4	–
313	11-6	–
32005-023	6-1	16
32005-023	6-1	17
3205A35	7-8	30
3205A35	7-8.1	27
321620	7-1.1	160
323101A575ZB	6-1	52
327	10-1	–
327	10-1	–
327	10-1	–
327	10-2	–
327	10-2	–
327	10-2	–
327	10-3	–
327	10-3	–
327	10-3	–
327	10-4	–

UNCONTROLLED COPY WHEN DOWNLOADED OR PRINTED

Visit www.enstromhelicopter.com for instructions to order an original manual and to register for email notification of updates.

PART NUMBER INDEX

Part Number	Figure	Item	Part Number	Figure	Item
327	10-4	–	381N-500	App A	–
327	10-5	–	381N-500-S	10-1	29
327	10-6	–	381N-500-S	10-2	29
32NBC2044YZP	8-3	11	381N-500-S	10-7	10
331008-13	3-17	10	381N-500-S	10-8	10
331008-2	3-17	7	381N-500-S	10-9	11
331281-34W	3-18	8	381N-500-S	App A	–
331281-34W	3-18	17	3-902 E515-80	8-5	25
331281-29W	3-17	15	3-902 V747-75	7-1.1	20
331381-48W	3-17	30	3-902 V747-75	7-1.1	140
34-0428020-65	10-31	2	3-902 V747-75	7-1.1	190
34-0428020-65	App A	–	3-903 V747-75	7-1.1	210
34-0428070-64	10-31	4	3-903 V747-75	7-1.1	230
34-0428070-64	App A	–	3-910 E515-80	8-5	24
34256	7-8	25	3SNE094A-72	6-6	1
34256	7-8.1	22	3SNE094A-72	App A	–
3519-6	6-9	–	3SNE-094A-72	App A	–
35574	7-8	14	3-SNE-094A-72	App A	–
35574	7-8.1	11	4 C5OX-S	6-1	25
36-0050626-01	10-32	6	4016-1	3-3	19
3621	10-13	28	408764B	6-1	–
3621	10-14	–	409140	6-1	52
3621	10-15	1	40NBC2052YZP	8-3	9
3659-03	10-22	11	4101501-3	3-1	–
369583	7-1.1	160	4110040-201	3-1	300
369H8011	6-3	28	4112000-103	3-7	1
38-0130090-00	10-31	9	4112000-7	3-7	1
38-0130090-00	App A	–	4112000-9	3-7	1
38-0130107-00	10-31	7	4112000-903	3-1	310
38-0130107-00	App A	–	4112003-11	3-8	33
38-0130878-01	10-32	5	4112003-12	3-8	34
38-0230021-00	10-31	5	4112003-13	3-8	36
38-0230021-00	App A	–	4112003-14	3-8	37
38-0230021-01	10-32	3	4112004-1	3-8	1
38-0250901-00	10-32	1	4112011-5	3-9	12
381N500	10-9	11	4112025-11	3-1	130
381N500	App A	–	4112025-11	3-7	6

UNCONTROLLED COPY WHEN DOWNLOADED OR PRINTED

Visit www.enstromhelicopter.com for instructions to order an original manual and to register for email notification of updates.

PART NUMBER INDEX

Part Number	Figure	Item	Part Number	Figure	Item
4112025-13	3-1	140	4114014-15	3-14	–
4112025-13	3-7	7	4114018-1	3-1	290
4112025-15	3-1	150	4114020-1	3-1	270
4112025-15	3-7	8	4114023-901	3-1	10
4112025-17	3-1	160	4114026-3	3-2	13
4112025-17	3-7	9	4114026-4	3-2	14
4112025-19	3-1	170	4114029-1	3-2	13
4112025-19	3-7	10	4114029-2	3-2	14
4112034-11	3-12	–	4114030-3	3-1	30
4112034-13	3-12	6	4114037-1	10-17	23
4112034-15	3-12	10	4114039-11	10-17	20
4112034-15	3-9	8	4114039-15	10-17	20
4112034-23	3-12	2	4115000-1	10-35	5
4112034-25	3-12	6	4115001-21	11-6	60
4112034-3	3-12	1	4115004-1	3-21	90
4112034-37	3-12	–	4115004-3	3-21	100
4112035-5	3-12	11	4115005-1	3-21	70
4114002-13	3-3	12	4115005-3	3-21	80
4114002-14	3-3	13	4115005-9	3-21	–
4114002-21	3-3	6	4115013-1	3-21	140
4114002-21	3-6	30	4115014-17	3-21	–
4114002-22	3-3	7	4115014-18	3-21	–
4114002-22	3-6	40	4115014-19	3-21	–
4114002-23	3-3	4	4115014-21	3-21	–
4114002-24	3-3	5	4115014-22	3-21	–
4114002-29	3-3	1	4115020-1	3-21	210
4114002-30	3-3	2	4118255-39	3-3	3
4114002-31	3-3	14	4118260-5	3-6	310
4114002-32	3-3	15	4118260-6	3-6	320
4114002-919	3-3	8	4118268-11	3-4	10
4114002-920	3-3	9	4118268-12	3-4	20
4114009-3	3-6.1	390	4118268-13	3-4	10
4114009-4	3-6.1	400	4118268-14	3-4	20
4114010-11	3-2	15	4118269-11	3-4	120
4114014-11	3-14	–	4118269-12	3-4	130
4114014-13	3-14	–	4118270-1	3-4	60
4114014-14	3-14	–	4118270-2	3-4	70

UNCONTROLLED COPY WHEN DOWNLOADED OR PRINTED

Visit www.enstromhelicopter.com for instructions to order an original manual and to register for email notification of updates.

PART NUMBER INDEX

Part Number	Figure	Item	Part Number	Figure	Item
4118271-1	3-4	100	4118291-7	3-6	460
4118271-2	3-4	110	4118291-8	3-6	470
4118272-1	3-4	–	4118291-9	3-6	920
4118272-2	3-4	–	4118292-1	3-6	280
4118272-3	3-4	–	4118292-13	3-6	330
4118272-4	3-4	–	4118292-17	3-6	140
4118278-21	3-6.1	120	4118292-17	3-6	340
4118278-21	3-6.1	360	4118292-29	3-6	660
4118278-23	3-6.1	110	4118292-3	3-6	130
4118278-23	3-6.1	350	4118292-30	3-6	670
4118281-1	3-6.1	20	4118292-33	3-6	540
4118281-19	3-6.1	190	4118292-34	3-6	550
4118281-2	3-6.1	30	4118292-35	3-6	760
4118281-21	3-6.1	380	4118292-36	3-6	770
4118281-3	3-6.1	60	4118292-43	3-6	400
4118281-4	3-6.1	70	4118292-43	3-6	830
4118284-1	3-6.1	150	4118292-47	3-6	290
4118284-1	3-6.1	330	4118292-5	3-6	790
4118284-13	3-6.1	180	4118292-6	3-6	800
4118284-13	3-6.1	370	4118292-7	3-6	610
4118290-15	3-6.1	260	4118292-8	3-6	620
4118290-16	3-6.1	290	4118294-17	3-6	880
4118290-17	3-6.1	300	4118294-18	3-6	890
4118290-18	3-6.1	310	4118294-19	3-6	230
4118290-21	3-6.1	320	4118294-20	3-6	240
4118290-33	3-6.1	280	4118294-25	3-6	500
4118291-10	3-6	930	4118294-26	3-6	420
4118291-101	3-6	360	4118294-26	3-6	510
4118291-102	3-6	370	4118308-11	3-6	680
4118291-13	3-6	630	4118308-12	3-6	690
4118291-13	3-6	810	4118308-13	3-6	850
4118291-25	3-6	210	4118308-14	3-6	860
4118291-25	3-6	380	4118309-903	3-6	50
4118291-25	3-6	480	4118309-904	3-6	60
4118291-25	3-6	940	4118310-1	3-6.1	–
4118291-5	3-6	190	4118310-2	3-6.1	–
4118291-6	3-6	200	4118310-5	3-6	10

UNCONTROLLED COPY WHEN DOWNLOADED OR PRINTED

Visit www.enstromhelicopter.com for instructions to order an original manual and to register for email notification of updates.

PART NUMBER INDEX

Part Number	Figure	Item	Part Number	Figure	Item
4118310-6	3-6	20	4119327-3	3-2	5
4118310-905	3-1	250	4119328-13	3-2	–
4118310-905	3-6	–	4119328-14	3-2	–
4118310-906	3-1	–	4119328-15	3-2	–
4118310-906	3-6	–	4119328-16	3-2	–
4118312-21	3-6	70	4119329-3	3-2	3
4118312-22	3-6	80	4119329-4	3-2	4
4118313-1	3-6	430	4119329-5	3-2	5
4118788-13	3-14	–	4119333-3	5-1	17
4118788-15	3-14	–	4119333-3	5-3	9
4118788-17	3-14	–	4119333-3	5-4	9
4118798-5	9-14	61	4119333-4	5-1	18
4118798-7	9-14	65	4119333-4	5-3	10
4118805-11	9-1	17	4119333-4	5-4	10
4118805-12	9-1	18	4119334-3	3-2	1
4118805-13	9-1	19	4119334-4	3-2	2
4118824-11	9-1	15	4119343-11	3-2	–
4118824-12	9-1	16	4119343-13	3-2	–
4118824-17	9-1	15	4119344-901	3-2	6
4118824-18	9-1	16	4119344-903	3-2	8
4118850-900	3-1	360	4119344-905	3-2	8
4118892-11	4-1	17	4119345-15	3-2	–
4119315-3	3-2	28	4119345-15	3-2	–
4119315-4	3-2	29	4119345-5	3-2	–
4119316	3-2	–	4119345-5	3-2	–
4119316-5	3-2	20	4119345-902	3-2	10
4119316-6	3-2	21	4119348-901	3-2	12
4119316-903	3-2	16	4119350-902	3-1	240
4119319-13	3-2	–	4119351-11	6-3	40
4119319-17	3-2	–	4119351-13	3-2	–
4119319-3	3-2	–	4119351-13	3-2	–
4119319-3	3-2	–	4119351-13	3-2	–
4119319-7	3-2	–	4119351-15	6-3	40
4119319-7	3-2	–	4119351-15	6-3	41
4119327-1	3-2	–	4119351-17	6-3	41
4119327-13	3-2	–	4119351-19	3-2	–
4119327-14	3-2	–	4119351-19	3-2	–

UNCONTROLLED COPY WHEN DOWNLOADED OR PRINTED

Visit www.enstromhelicopter.com for instructions to order an original manual and to register for email notification of updates.

PART NUMBER INDEX

Part Number	Figure	Item	Part Number	Figure	Item
4119351-19	3-2	–	4119525-110	6-1.1	360
4119352-13	3-2	–	4119525-15	6-1.1	390
4119352-15	3-2	–	4119525-19	6-1.1	–
4119352-16	3-2	–	4119525-21	6-1.1	–
4119355-11	3-2	–	4119525-23	6-1.1	40
4119356-3	3-2	3	4119525-25	6-1.1	280
4119356-4	3-2	4	4119525-27	6-1.1	210
4119357-1	3-2	9	4119525-29	6-1.1	220
4119357-13	3-2	–	4119525-3	6-1.1	300
4119357-902	3-2	9	4119525-33	6-1.1	60
4119358-3	3-2	7	4119525-37	6-1.1	20
4119361-13	3-2	30	4119525-41	6-1.1	80
4119364-13	3-2	–	4119525-43	6-1.1	70
4119365-13	3-2	–	4119525-45	6-1.1	50
4119366-1	3-2	7	4119525-47	6-1.1	260
4119500-107	6-1.1	–*	4119525-49	6-1.1	90
4119518-11	6-1.1	420	4119525-5	6-1.1	380
4119519-21	5-3	18	4119525-51	6-1.1	250
4119519-21	5-4	18	4119525-61	6-1.1	140
4119519-23	6-1.1	450	4119525-63	6-1.1	–
4119519-25	6-1.1	460	4119525-64	6-1.1	–
4119519-25	9-5	30	4119525-65	6-1.1	160
4119519-27	6-1.1	470	4119525-66	6-1.1	170
4119519-27	9-2	63	4119526-1	6-1.1	10
4119519-29	6-1.1	480	4119742-1	3-18	51
4119521-1	10-22	12	4119742-3	3-18	52
4119522-15	5-3	19	4119743-11	3-17	–
4119522-15	5-4	19	4119744-1	3-17	31
4119522-16	5-3	19	4119745-11	3-17	36
4119522-16	5-4	19	4119746-17	3-17	17
4119525-53	6-1.1	–	4119750-5	3-14	–
4119525-55	6-1.1	–	4119750-7	3-14	–
4119525-101	6-1.1	190	4119756-17	3-18	36
4119525-103	6-1.1	200	4119756-21	3-18	30
4119525-105	6-1.1	130	4119758-21	3-17	23
4119525-107	6-1.1	150	4119758-23	3-17	23
4119525-109	6-1.1	350	4119759-3	3-1	90

UNCONTROLLED COPY WHEN DOWNLOADED OR PRINTED

Visit www.enstromhelicopter.com for instructions to order an original manual and to register for email notification of updates.

PART NUMBER INDEX

Part Number	Figure	Item	Part Number	Figure	Item
4119760-3	3-15	2	4119782-3	3-18	–
4119760-3	3-16	–	4119782-901	3-18	2
4119760-5	3-15	1	4119782-903	3-18	11
4119760-5	3-16	–	4119783-19	3-18	–
4119760-903	3-1	20	4119783-21	3-18	–
4119760-905	3-1	70	4119783-23	3-18	–
4119761-5	3-17	1	4119783-23	3-18	–
4119761-7	3-17	1	4119783-25	3-16	2
4119762-5	3-16	1	4119783-31	3-18	–
4119764-19	3-15	3	4119783-31	3-18	–
4119764-21	3-15	6	4119784-15	3-17	26
4119764-23	3-15	5	4119785-15	3-17	19
4119764-25	3-15	4	4119785-21	3-17	2
4119764-27	3-15	4	4119786-1	3-18	–
4119764-29	3-15	6	4119786-3	3-18	–
4119764-31	3-15	5	4119786-901	3-18	–
4119764-33	3-15	3	4119788-15	3-17	21
4119765-17	3-16	6	4119789-19	3-17	6
4119765-19	3-16	5	4119791-13	3-17	29
4119768-19	3-17	3	4119791-15	3-18	7
4119768-21	3-17	4	4119791-15	3-18	16
4119775-101	3-18	10	4119795-1	3-18	–
4119775-103	3-1	80	4119795-3	3-18	–
4119775-9	3-18	1	4119795-901	3-18	53
4119780-11	3-18	24	4119795-903	3-18	53
4119780-19	3-17	11	4119796-11	3-18	44
4119780-23	3-16	14	4119796-13	3-18	44
4119780-25	3-18	27	4119797-1	3-18	43
4119780-25	3-18	38	4119798-1	3-21	35
4119780-29	3-18	35	4119798-3	3-21	35A
4119781-11	3-18	19	4119799-25	3-18	39
4119781-12	3-18	21	4119799-27	3-18	41
4119781-13	3-18	20	4119801-1	3-21	–
4119781-15	3-18	19	4119804-21	3-21	21
4119781-16	3-18	21	4119804-21	9-14	–
4119781-17	3-18	20	4119804-22	3-21	22
4119782-1	3-18	–	4119804-22	9-14	–

UNCONTROLLED COPY WHEN DOWNLOADED OR PRINTED

Visit www.enstromhelicopter.com for instructions to order an original manual and to register for email notification of updates.

PART NUMBER INDEX

Part Number	Figure	Item	Part Number	Figure	Item
4119804-23	3-21	23	4119863-11	3-16	–
4119804-23	9-14	–	4119865-5	10-35	1
4119804-24	3-21	24	4119865-7	10-35	1
4119804-24	9-14	–	4119870-3	3-21	40
4119812-1	3-21	270	4119871-3	3-21	50
4119812-2	3-21	280	4119872-3	3-21	60
4119835-23	5-12	150	4119873-1	3-21	200
4119835-27	3-20	70	4119873-11	10-11	1
4119835-27	5-11	170	4119873-13	10-11	4
4119835-31	3-20	60	4119878-11	3-16	–
4119835-31	5-12	150	4119878-12	3-16	–
4119835-31C480	3-20	110	4119879-11	3-18	–
4119835-31C480B	3-20	110	4119879-11	3-18	–
4119835-31GRD	3-20	30	4119879-13	3-18	–
4119835-33	11-6	–	4119879-13	3-18	–
4119835-33	11-6	–	4119880-11	3-18	–
4119835-35	11-6	–	4119884-1	3-21	30
4119839-13	3-6.1	50	4119884-11	3-18	56
4119840-11	10-11	5	4119884-12	3-18	57
4119841-5	3-21	110	4119884-13	3-18	54
4119842-5	3-19	1	4119884-15	3-18	55
4119844-15	3-19	9	4119884-19	3-18	–
4119844-17	3-19	9	4119884-21	3-18	–
4119845-11	3-19	4	4119884-21	3-18	–
4119849-1	3-21	120	4119887-11	10-35	2
4119849-3	3-21	130	4119887-13	10-35	2
4119849-901	3-16	–	4119887-911	10-35	2
4119849-902	3-16	8	4119889-1	3-21	240
4119849-902	3-17	–	4119889-2	3-21	250
4119849-903	3-16	8	4119890-5	11-5	330
4119849-903	3-17	–	4119890-6	10-35	7
4119855-11	3-19	17	4119890-6	11-4	18
4119855-11	9-14	–	4119890-6	11-5	350
4119858-13	3-19	11	4119890-7	10-35	6
4119861-1	3-21	20	4119890-7	11-4	13
4119862-11	3-18	–	4119891-7	3-21	10
4119862-13	3-18	–	4119892-11	3-20	140

UNCONTROLLED COPY WHEN DOWNLOADED OR PRINTED

Visit www.enstromhelicopter.com for instructions to order an original manual and to register for email notification of updates.

PART NUMBER INDEX

Part Number	Figure	Item	Part Number	Figure	Item
4119893-3	10-35	3	4120029-11	6-1	69
4119894-15	11-1	40	4120029-13	6-1	70
4119894-17	11-4	9	4120030-1	10-20	1
4119894-17	11-5	60	4120030-3	10-20	9
4119894-19	11-1	41	4120030-5	10-20	11
4119894-21	6-5	9	4120031-1	6-1	45
4119894-23	6-5	8	4120032-11	6-1	46
4119895-1	11-4	18	4120032-13	6-1	45
4119895-3	11-4	13	4120033-1	6-1	66
4119913-11	3-20	50	4120033-3	6-1	67
4119914-11	3-20	90	4120034-1	6-1	65
4119917-11	5-11	170	4120035-11	6-1	72
4120011-11	6-1	53	4120036-1	6-4	–
4120012-13	6-1	96	4120038-23	5-5	–
4120012-15	6-1	97	4120038-23	5-5	–
4120012-17	6-1	98	4120038-25	5-5	–
4120012-19	6-1	99	4120040-3	6-13	4
4120012-21	6-1	89	4120040-4	6-13	5
4120012-22	6-1	90	4120040-5	6-13	2
4120013-21	6-1	100	4120040-6	6-13	3
4120016-3	6-1	48	4120045-5	6-13	1
4120016-4	6-1	49	4120045-9	6-13	1
4120016-5	6-1	48	4120046-11	6-1	42
4120016-6	6-1	49	4120046-13	6-1	42
4120016-7	6-1	48	4120046-15	6-1	42
4120016-8	6-1	49	4120046-17	6-1	42
4120017-3	6-14	1	4120500-901	6-3	–
4120018-1	6-14	2	4120506-11	6-3	1
4120021-1	6-1	21	4120507-1	6-3	4
4120022-13	6-1	83	4120509-1	6-3	–
4120025-15	6-4	10	4120509-11	6-3	17
4120026-13	6-4	21	4120509-17	6-3	17
4120026-15	6-4	21	4120509-3	6-3	–
4120027-1	11-2	4	4120510-3	6-3	22
4120027-1	11-2	20	4120510-5	6-3	22
4120027-1	6-4	8	4120510-905	6-3	22
4120028-1	6-1	71	4120511-1	6-4	2

UNCONTROLLED COPY WHEN DOWNLOADED OR PRINTED

Visit www.enstromhelicopter.com for instructions to order an original manual and to register for email notification of updates.

PART NUMBER INDEX

Part Number	Figure	Item	Part Number	Figure	Item
4120513-3	6-4	–	4122015-23	11-2	12
4130514-11	6-3	5	4122015-23	11-2	28
4120515-1	6-3	11	4122015-23	6-4	13
4120515-3	6-3	13	4122015-25	5-8	17
4120515-5	6-4	37	4122015-25	5-8	45
4120515-7	6-4	35	4122015-25	5-8	86
4120516-11	6-3	18	4122016-23	5-4	25
4120516-13	6-3	19	4122016-5	5-3	22
4120517-11	6-1	13	4122017-11	5-8	21
4120517-13	6-1	14	4122019-13	5-3	11
4120517-15	6-4	23	4122021-1	5-3	3
4120517-17	6-4	25	4122021-1	5-4	3
4120521-11	6-3	34	4122022-11	5-3	4
4120525-11	6-3	35	4122022-11	5-4	4
4120525-13	6-3	35	4122024-17	5-8	34
4120525-15	6-3	36	4122024-17	5-8	75
4120532-9	6-3	–	4122024-5	5-8	8
4122000-9	9-15	–	4122025-3	5-5	19
4122005-19	5-2	80	4122025-3	5-6	25
4122005-20	5-2	50	4122026-3	5-12	220
4122005-39	5-2	20	4122026-5	5-12	350
4122005-41	5-2	70	4122026-7	5-8	26
4122005-43	5-2	60	4122026-7	5-8	67
4122005-49	5-2	270	4122026-7	5-8	94
4122009-1	5-3	1	4122026-9	5-5	29A
4122009-1	5-4	1	4122028-3	5-5	38
4122009-2	5-3	2	4122029-1	5-5	32
4122009-4	5-4	2	4122029-1	5-6	38
4122014-15	5-6	2	4122029-15	5-5	34
4122015-11	6-4	13	4122029-15	5-6	40
4122015-15	6-1	78	4122029-3	5-5	24
4122015-17	5-8	14	4122029-3	5-6	30
4122015-19	5-8	17	4122029-7	5-5	34A
4122015-19	5-8	45	4122030-101	5-5	46
4122015-19	5-8	86	4122030-105	5-5	45
4122015-21	11-2	12	4122030-5	5-5	1
4122015-21	11-2	28	4122030-5	5-6	1

UNCONTROLLED COPY WHEN DOWNLOADED OR PRINTED

Visit www.enstromhelicopter.com for instructions to order an original manual and to register for email notification of updates.

PART NUMBER INDEX

Part Number	Figure	Item	Part Number	Figure	Item
4122030-7	5-5	3	4122043-11	7-1.1	121
4122030-9	5-5	44	4122044-1	5-2	200
4122034-11	5-3	7	4122044-2	5-2	160
4122034-11	5-4	7	4122045-1	7-7	10
4122034-11	5-7	11	4122047-17	5-2	580
4122035-1	5-5	33	4122047-17	5-2	650
4122035-11	5-6	39	4122047-18	5-2	590
4122035-13	5-6	29	4122047-19	5-2	560
4122035-13	5-6	31	4122047-19	5-2	680
4122035-1	5-5	25	4122047-20	5-2	570
4122035-3	5-5	23	4122048-1	5-4	20
4122035-5	5-5	12	4122048-3	5-1	12
4122036-3	5-12	130	4122049-13	5-8	4
4122036-5	5-9	12	4122049-13	5-8	30
4122036-7	5-12	130	4122049-19	5-8	4
4122036-7	5-9	12	4122049-19	5-8	30
4122037-11	5-5	28	4122049-19	5-8	71
4122037-11	5-6	34	4122049-3	5-8	1
4122037-12	5-5	27	4122049-3	5-8	27
4122037-12	5-6	33	4122049-5	5-8	1
4122037-13	5-5	28	4122049-5	5-8	27
4122037-13	5-6	34	4122049-5	5-8	68
4122037-14	5-5	27	4122050-7	5-11	–
4122037-14	5-6	33	4122051-101	5-11	250
4122038-11	5-2	320	4122051-101	5-8	–
4122038-13	5-2	330	4122051-5	5-8	–
4122038-15	5-2	340	4122051-7	5-8	–
4122038-17	5-2	350	4122051-9	5-8	–
4122040-11	6-1	62	4122052-1	5-1	–
4122041-3	5-3	8	4122052-10	5-1	–
4122041-3	5-4	8	4122052-2	5-1	–
4122042-1	6-1	59	4122052-3	5-1	–
4122042-101	6-1	58	4122052-4	5-1	–
4122042-3	6-1	58	4122052-5	5-1	–
4122042-5	6-1	37	4122052-6	5-1	–
4122042-9	6-1	59	4122052-7	5-1	–
4122043-11	6-1	34	4122052-8	5-1	–

UNCONTROLLED COPY WHEN DOWNLOADED OR PRINTED

Visit www.enstromhelicopter.com for instructions to order an original manual and to register for email notification of updates.

PART NUMBER INDEX

Part Number	Figure	Item
▌ 4122052-101	5-1	–
▌ 4122052-102	5-1	–
4122053-13	5-1	4
4122053-17	5-7	1
4122053-19	5-7	1
4122054-3	5-1	–
4122054-903	5-1	1
4122054-904	5-1	2
▌ 4122054-906	5-1	–
4122055-3	5-7	5
4122056-11	5-7	3
4122057-1	5-1	7
4122057-2	5-1	8
4122057-3	5-1	7
4122057-3	5-7	–
4122057-4	5-1	8
4122057-4	5-7	–
4122058-901	5-1	–
4122058-902	5-1	–
4122059-3	5-5	9
4122060-1	5-7	4
4122061-5	3-1	280
4122061-5	5-2	–
4122062-11	5-2	380
4122062-13	5-2	390
4122064-3	5-9	1
4122065-15	5-1	25
4122065-17	5-4	31
4122065-19	5-4	29
4122065-21	5-1	16
4122065-23	5-1	24
4122065-23	5-4	11
4122065-23	5-4	30
4122065-25	5-1	21
4122065-27	5-1	10
4122065-33	5-1	27
4122065-35	5-1	34
4122068-11	5-4	24
4122069-11	5-4	33
4122070-1	5-7	7
4122071-1	5-1	26
4122071-13	5-1	–
4122071-13	5-3	–
4122071-13	5-4	–
▌ 4122074-11	5-1	22A
4122074-903	5-3	12
4122074-903	5-4	12
4122074-905	5-1	22
4122078-1	5-8	36
4122078-3	5-8	77
4122078-5	5-8	77
4122080-11	5-8	43
4122080-11	5-8	84
4122080-13	5-8	49
4122080-17	5-8	32
4122080-17	5-8	73
4122080-19	5-8	79
4122081-1	5-8	39
4122081-1	5-8	80
4122081-15	5-8	80
4122081-3	5-8	46
4122081-5	5-8	80
4122082-11	5-8	37
4122082-11	5-8	78
4122083-1	5-8	62
4122083-17	5-8	60
4122083-19	5-8	63
4122083-21	5-8	–
4122083-3	5-8	64
4122084-1	5-1	30
4122084-13	5-1	33
4122085-13	5-2	610
4122085-13	5-2	740
4122085-14	5-2	620

UNCONTROLLED COPY WHEN DOWNLOADED OR PRINTED

Visit www.enstromhelicopter.com for instructions to order an original manual and to register for email notification of updates.

PART NUMBER INDEX

Part Number	Figure	Item	Part Number	Figure	Item
4122085-15	5-2	630	4129054-41	5-7	12
4122085-16	5-2	640	4129054-41	6-1	43
4122085-21	5-2	660	4129054-43	5-12	330
4122085-22	5-2	670	4129054-45	6-1	1
4122085-24	5-2	620	4129054-5	6-1	3
4122086-11	5-2	10	4129054-7	6-1	1
4122086-12	5-2	40	4129054-7	6-9	17
4122087-11	5-8	42	4129054-9	6-9	19
4122087-11	5-8	83	4129100-11	6-9	9
4122088-1	5-1	14	4129100-9	6-9	–
4122088-3	5-1	14	4129100-902	6-9	–
4122088-5	5-1	14	4129101-101	6-10	–
4129054-1	6-9	21	4129101-103	6-10	–
4129054-105	6-1	5	4129101-105	6-10	–
4129054-11	6-9	21	4129101-5	6-10	1
4129054-13	5-3	6	4129101-7	6-10	1
4129054-13	5-4	6	4129101-9	6-10	–
4129054-13	5-7	12	4129101-905	6-10	–
4129054-13	6-1	43	4129101-907	6-10	–
4129054-13	6-9	15	4129102-105	6-10	21
4129054-17	6-9	17	4129102-107	6-10	21
4129054-19	6-9	19	4129102-13	6-10	21
4129054-25	5-3	6	4129102-15	6-10	21
4129054-25	5-4	6	4129103-11	6-10	8
4129054-25	6-9	15	4129104-21	6-10	18
4129054-27	5-12	330	4129107-13	6-11	1
4129054-29	6-9	15	4129107-13	6-12	1
4129054-3	5-7	12	4129108-11	6-11	2
4129054-3	6-1	43	4129108-13	6-12	3
4129054-3	6-9	15	4129108-15	6-11	3
4129054-31	6-9	17	4129111-1	6-11	11
4129054-33	6-9	19	4129111-3	6-12	13
4129054-35	6-9	21	4129112-11	6-9	26
4129054-37	6-1	3	4129113-1	6-11	23
4129054-39	5-3	6	4129113-1	6-12	25
4129054-39	5-4	6	4129113-3	6-12	25
4129054-39	6-1	5	4129116-1	6-12	4

UNCONTROLLED COPY WHEN DOWNLOADED OR PRINTED

Visit www.enstromhelicopter.com for instructions to order an original manual and to register for email notification of updates.

PART NUMBER INDEX

Part Number	Figure	Item	Part Number	Figure	Item
4129117-11	6-10	15	4129523-21	11-5	130
4129117-13	6-10	15	4129524-11	11-4	4
4129117-15	6-10	15	4129524-11	11-5	240
4129117-17	6-10	15	4129530-1	11-4	1
4129117-19	6-10	15	4129530-1	11-5	120
4129117-21	6-10	15	4129533-11	11-5	50
4129118-15	6-12	16	4129533-11	6-5	7
4129119-11	6-10	11	4129533-13	11-5	70
4129120-1	6-11	20	4129533-13	6-5	11
4129120-1	6-12	22	4129533-15	6-5	10
4129120-13	6-11	17	4129534-11	6-5	1
4129120-13	6-12	19	4129535-11	6-5	4
4129121-1	6-11	16	4129535-13	6-5	3
4129121-1	6-12	18	4129538-15	6-5	2
4129124-11	6-9	40	4129538-17	6-5	2
4129125-11	6-11	15	4129540-11	11-2	9
4129125-11	6-12	17	4129540-11	11-2	25
4129125-15	6-11	9	4129540-13	11-2	9
4129125-15	6-12	11	4129540-13	11-2	25
4129125-17	6-11	10	4129540-15	11-2	9
4129125-17	6-12	12	4129540-15	11-2	25
4129126-13	6-10	2	4129541-1	11-2	1
4129126-15	6-10	2	4129542-1	11-2	17
4129129-1	6-10	1	4129543-1	11-3	8
4129129-3	6-10	1	4129543-3	11-3	8
4129129-5	6-10	1	4129548-11	11-4	15
4129136-11	6-9	53	4129548-13	11-4	16
4129136-13	6-9	54	4129548-15	11-5	10
4129136-15	6-9	55	4129548-17	11-5	20
4129500-29	11-4	10	4129548-3	11-5	–
4129501-901	11-1	34	4129549-11	6-5	15
4129501-901	11-2	–	4129550-11	11-1	21
4129501-902	11-1	36	4129551-11	11-1	20
4129501-902	11-2	–	4129552-1	11-1	13
4129518-1	6-1	15	4129553-1	11-1	6
4129522-13	11-5	180	4129554-1	11-1	2
4129522-17	11-5	160	4129555-1	11-1	9

UNCONTROLLED COPY WHEN DOWNLOADED OR PRINTED

Visit www.enstromhelicopter.com for instructions to order an original manual and to register for email notification of updates.

PART NUMBER INDEX

Part Number	Figure	Item	Part Number	Figure	Item
4129556-1	11-1	8	4130021-25	7-8	18
4129557-11	11-3	6	4130021-25	7-8.1	15
4129557-13	11-3	5	4130030-1	7-8	–
4129558-11	11-1	26	4130030-3	7-6	–
4129559-1	11-1	14	4130031-1	7-9	20
4129559-1	11-3	–	4130032-1	7-9	19
4129560-1	11-1	33	4130032-3	7-9	17
4129560-3	11-1	35	4130032-5	7-9	17
4129560-5	11-4	8	4130032-7	7-9	29
4129560-5	11-5	30	4130032-9	7-9	17
4129560-7	6-4	29	4130033-1	7-9	8
4129560-7	6-5	17	4130033-17	7-9	–
4129560-9	6-1	77	4130034-11	7-9	2
4129560-9	6-5	18	4130034-13	7-9	3
4129561-11	11-1	44	4130034-15	7-9	2
4129562-3	11-1	43	4130034-17	7-9	2
4129563-11	11-1	45	4130034-19	7-9	2
4130008-1	7-8.2	20	4130034-21	7-9	3
4130008-10	7-8.2	50	4130035-1	7-9	12
4130008-2	7-8.2	30	4130035-11	7-9	14
4130008-20	7-8.2	55	4130035-13	7-9	–
4130008-3	7-8.2	40	4130036-5	7-9	10
4130015-1	7-8	11	4130038-11	7-9	8
4130015-1	7-8.1	8	4130039-1	7-9	10
4130015-3	7-8	11	4130040-1	7-9	–
4130015-3	7-8.1	8	4130040-5	7-9	–
4130020-1	7-8	–	4130040-7	7-9	–
4130020-101	7-8	–	4130040-9	7-9	–
4130020-103	7-8	–	4130046-11	7-6.1	9
4130020-3	7-6	–	4130052-11	7-8	26
4130020-5	7-6	–	4130052-13	7-8	26
4130020-7	7-8	–	4130052-13	7-8.1	23
4130020-9	7-6	–	4130060-101	7-8.1	–
4130021-15	7-8	19	4130060-103	7-8	–
4130021-21	7-8	18	4130060-105	7-8.1	–
4130021-23	7-8	19	4130060-107	7-8	–
4130021-23	7-8.1	16	4130060-109	7-8.1	–

UNCONTROLLED COPY WHEN DOWNLOADED OR PRINTED

Visit www.enstromhelicopter.com for instructions to order an original manual and to register for email notification of updates.

PART NUMBER INDEX

Part Number	Figure	Item	Part Number	Figure	Item
4130060-111	7-6	–	4130510-17	7-4	12
4130060-113	7-6	–	4130510-17	7-5	15
4130060-3	7-8	–	4130510-19	7-4	12
4130060-5	7-6.1	–	4130510-19	7-5	15
4130060-7	7-6.1	–	4130511-3	7-6	19
4130060-9	7-8.1	–	4130511-3	7-6.1	18
4130402-11	7-7	5	4130512-13	7-4	13
4130402-13	7-7	5	4130512-17	7-5	16
4130500-101	7-4	–	4130513-13	7-4	11
4130500-105	7-5	1	4130513-13	7-5	14
4130500-106	7-5	1A	4130514-15	7-6	1
4130500-111	7-5	–	4130514-17	7-6	1
4130500-5	7-4	–	4130516-17	7-4	17
4130500-7	7-4	1	4130516-17	7-5	20
4130500-901	7-4	–	4130517-13	7-4	14
4130500-909	7-5	–	4130517-13	7-5	17
4130500-911	7-5	–	4130518-1	7-3	4
4130500-990	7-5	–	4130520-11	7-3	30
4130500-991	7-5	–	4130520-13	7-4	25
4130501-11	7-6	7	4130520-13	7-5	28
4130501-11	7-6.1	6	4130521-11	7-3	32
4130503-1	7-3	–	4130521-11	7-4	27
4130503-11	7-3	12	4130521-11	7-5	30
4130504-13	7-4	21	4130521-13	7-3	32
4130504-13	7-5	24	4130521-13	7-4	27
4130505-4	7-11	23	4130521-13	7-5	30
4130505-4	7-8	34	4130521-15	7-3	32
4130505-8	7-10	2	4130521-15	7-4	27
4130505-8	7-10	4	4130521-15	7-5	30
4130506-15	7-4	16	4130521-17	7-3	32
4130506-15	7-5	19	4130521-17	7-4	27
4130507-13	7-3	5	4130521-17	7-5	30
4130507-19	7-3	6	4130521-19	7-3	32
4130508-13	7-4	10	4130521-19	7-4	27
4130508-13	7-5	13	4130521-19	7-5	30
4130509-1	7-4	2	4130521-21	7-3	32
4130510-15	7-5	15	4130521-21	7-4	27

UNCONTROLLED COPY WHEN DOWNLOADED OR PRINTED

Visit www.enstromhelicopter.com for instructions to order an original manual and to register for email notification of updates.

PART NUMBER INDEX

Part Number	Figure	Item	Part Number	Figure	Item
4130521-21	7-5	30	4131001-103	7-2	–
4130521-23	7-3	32	4131001-105	7-1	1
4130521-23	7-4	27	4131001-111	7-2	–
4130521-23	7-5	30	4131001-113	7-2	–
4130521-25	7-3	32	4131001-115	7-2	–
4130521-25	7-4	27	4131001-129	7-1	3
4130521-25	7-5	30	4131001-129	7-1.1	10
4130521-9	7-3	32	4131001-131	7-1	1
4130521-9	7-4	27	4131002-15	7-1	22
4130521-9	7-5	30	4131003-21	7-2	1
4130524-13	7-4	15	4131003-23	7-2	1
4130524-13	7-5	18	4131004-15	7-1	26
4130525-1	7-3	1	4131005-11	7-2	2
4130525-11	7-3	1	4131005-13	7-1	24
4130529-13	7-3	24	4131005-13	7-1	28
4130529-15	7-3	20	4131005-15	7-1	24
4130529-17	7-3	26	4131005-15	7-1	28
4130529-19	7-3	25	4131005-17	7-1	24
4130529-21	7-3	23	4131005-17	7-1	28
4130529-25	7-3	21	4131005-25	7-1	19
4130530-11	7-6	18	4131005-27	7-1	20
4130530-11	7-6.1	17	4131005-29	7-1	20
4130531-1	7-3	7	4131005-31	7-1	24
4130533-1	7-8.1	31	4131005-31	7-1	28
4130533-15	7-8.1	32	4131005-35	7-1	4
4130537-1	7-5	2A	4131005-35	7-1.1	14
4130537-2	7-5	2	4131005-37	7-1	4
4130538-11	7-6	1	4131005-37	7-1.1	15
4130538-11	7-6.1	1	4131005-39	7-2	6
4130541-11	6-10	3	4131005-39	7-2	6
4130541-11	7-4	18	4131005-41	7-2	6
4130541-11	7-5	21	4131005-41	7-2	6
4130541-13	6-10	3	4131006-25	7-1	3
4130541-13	7-4	18	4131006-25	7-1.1	11
4130541-13	7-5	21	4131006-31	7-1	3
▌ 4130541-15	6-10	3	4131006-33	7-1	3
▌ 4130541-17	6-10	3	4131006-45	7-1	3

UNCONTROLLED COPY WHEN DOWNLOADED OR PRINTED

Visit www.enstromhelicopter.com for instructions to order an original manual and to register for email notification of updates.

PART NUMBER INDEX

Part Number	Figure	Item	Part Number	Figure	Item
4131007-15	7-2	3	4140532-5	9-12	29
4131007-15	7-2	3	4140534-11	9-11	5
4131007-17	7-2	3	4140535-13	9-11	7
4131007-19	7-2	3	4142005-15	7-6	–
4131008-15	7-1	9	4142008-11	7-8	15
4131009-13	7-1	27	4142008-11	7-8.1	12
4131010-13	7-2	11	4142010-1	7-6.1	2
4131020-5	7-1.1	–	4142010-11	7-6	2
4131020-7	7-1.1	–	4142010-11	7-6	2
4131021-15	7-1.1	50	4142010-11	7-6	2
4131021-17	7-1.1	80	4143010-5	8-3	47
4131022-5	7-1.1	70	4143011-11	8-2	41
4131022-7	7-1.1	40	4143011-13	8-2	44
4131023-5	7-1.1	150	4143012-101	8-2	22
4131024-11	7-1.1	30	4143012-21	8-2	22
4131024-11	7-1.1	130	4143012-31	8-2	23
4132008-5	9-14	13	4143012-35	8-2	20
4132014-15	9-14	22	4143012-5	8-2	20
4132014-19	9-14	21	4143012-7	8-2	20
4132014-23	9-14	23	4143012-9	8-2	22
4133-0044	6-1	50	4143013-17	8-2	19
4136000-902	7-10	3	4150003-15	9-14	52
4136000-903	7-10	1	4150004-1	9-14	49
4136000-907	7-10	1	4150004-2	9-14	50
4136000-913	7-10	5	4150004-3	9-14	70
4136002-15	7-10	9	4150004-4	9-14	71
4140500-7	9-13	–	4150006-3	9-14	47
4140500-909	9-12	–	4150006-6	9-14	48
4140500-911	9-12	–	4150008-1	9-14	1
4140520-5	9-11	–	4150008-5	9-14	2
4140525-11	9-11	–	4150011-3	9-14	56
4140526-3	9-11	2	4150011-4	9-14	58
4140526-7	9-11	2	4150013-3	9-14	55
4140530-1	9-12	3	4150013-4	9-14	57
4140531-13	9-11	1	4150017-11	9-14	51
4140532-1	9-12	29	4150018-1	9-14	68
4140532-3	9-12	29	4150018-101	9-14	68

UNCONTROLLED COPY WHEN DOWNLOADED OR PRINTED

Visit www.enstromhelicopter.com for instructions to order an original manual and to register for email notification of updates.

PART NUMBER INDEX

Part Number	Figure	Item	Part Number	Figure	Item
4150018-6	9-14	75	4166010-7	9-1	–
4150018-7	9-14	72	4166010-7	9-1	–
4150018-8	9-14	69	4166011-1	9-2	11
4150018-9	9-14	74	4166014-1	9-1	10
416-13	6-9	–	4166014-3	9-1	10
4164	10-16	4	4166014-3	9-1	10
4164	10-17	13	4166014-5	9-1	10
4164002-1	6-6	14	4166015-11	9-1	2
4164004-11	6-6	–	4166015-11	9-1	2
4164004-11	9-6	34	4166015-13	9-1	5
4164004-11	9-7.1	27	4166015-15	9-1	5
4164004-13	6-6	8	4166015-17	9-1	2
4164006-11	6-7.2	20	4166015-17	9-1	2
4164006-11	9-4	29	4166015-19	9-1	6
4164012-5	6-6	24	4166015-21	9-1	4
4164014-103	6-8	2	4166015-21	9-1	4
4164014-17	6-8	13	4166015-21	9-1	4
4164014-29	6-8	11	4166015-23	9-1	5
4164014-43	9-5	27	4166015-23	9-1	5
4164015-1	6-8	–	4166022-905	9-1	26
4164015-901	6-8	–	4166024-101	9-2	45
4164015-902	6-8	1	4166024-101	9-2	55
4164017-3	9-4	16	4166024-103	9-2	40
4166008-101	9-2	12	4166024-103	9-2	50
4166008-19	9-2	29	4166024-11	9-2	–
4166008-21	9-2	9	4166024-13	9-2	–
4166008-23	9-2	12	4166024-19	9-2	41
4166008-25	9-2	25	4166024-19	9-2	51
4166008-27	9-2	28	4166024-23	9-2	–
4166008-29	9-2	24	4166024-23	9-2	–
4166009-101	9-1	1	4166024-37	9-2	–
4166009-3	9-1	1	4166024-37	9-2	–
4166009-5	9-1	1	4166024-5	9-2	49
4166009-7	9-1	1	4166024-7	9-2	39
4166009-9	9-1	1	4166031-101	9-2	34
4166010-1	9-1	–	4166031-101	9-3	–
4166010-3	9-1	–	4166031-102	9-2	35

UNCONTROLLED COPY WHEN DOWNLOADED OR PRINTED

Visit www.enstromhelicopter.com for instructions to order an original manual and to register for email notification of updates.

PART NUMBER INDEX

Part Number	Figure	Item	Part Number	Figure	Item
4166031-102	9-3	–	4166053-13	9-3	–
4166031-106	9-3	–	4166053-15	9-1	11
4166031-107	9-3	–	4166053-15	9-1	11
4166031-108	9-3	–	4166053-15	9-1	11
4166031-11	9-3	38	4166053-15	9-3	–
4166032-1	9-3	–	4167001	9-5	–
4166032-2	9-3	–	4167211-15	9-4	14
4166032-3	9-3	–	4167213-19	9-4	2
4166032-5	9-3	–	4167213-21	9-4	4
4166034-3	9-3	18	4167225-11	9-4	1
4166036-47	9-14	–	4167226-3	9-7	–
4166037-1	9-14	8	4167227-7	9-4	–
4166038-11	9-14	–	4167229-11	9-4	11
4166050-1	9-2	32	4167230-1	9-4	10
4166050-101	9-2	17	4167231-13	9-4	28
4166050-103	9-2	16	4167232-13	9-4	18
4166050-105	9-2	26	4167233-13	9-4	19
4166050-107	9-2	18	4167241-11	9-6	9
4166050-109	9-2	19	4167241-11	9-7	9
4166050-201	9-5	1	4167241-11	9-7.1	–
4166050-205	9-5	22	4167241-11	9-7.2	–
4166050-207	9-14	3	4167242-11	9-4	8
4166050-209	9-5	17	4167276-1	9-9	13
4166050-211	9-2	33	4167276-27	9-9	12
4166050-5	9-2	15	4167286-11	9-9	14
4166050-7	9-2	14	4167287-11	9-9	5
4166050-9	9-2	27	4167290-1	9-9	18
4166050-901	9-5	–	4167291-13	9-9	4
4166050-903	9-2	16	4167292-11	9-9	3
4166050-907	9-2	14	4167292-13	9-9	2
4166051-15	9-1	14	4167310-3	9-8	–
4166051-20	9-1	14	4167311-11	9-5	11
4166051-25	9-1	14	4167313-1	9-5	14
4166051-30	9-1	14	4167313-3	9-5	14
4166052-11	9-2	62	4167314-1	9-8	5
4166052-13	9-5	29	4167315-3	9-8	33
4166053-11	9-3	–	4167316-3	9-12	18

UNCONTROLLED COPY WHEN DOWNLOADED OR PRINTED

Visit www.enstromhelicopter.com for instructions to order an original manual and to register for email notification of updates.

PART NUMBER INDEX

Part Number	Figure	Item	Part Number	Figure	Item
4167316-5	9-12	18	4167323-17	9-7.2	5
4167317-13	9-12	22	4167323-19	9-6	14
4167318-11	9-12	25	4167323-19	9-7	14
4167319-1	9-8	8	4167323-19	9-7.1	6
4167320-11	9-8	13	4167323-19	9-7.2	6
4167320-13	9-8	3	4167324-15	9-4	26
4167321-101	9-7.2	25	4167324-17	9-6	25
4167321-103	9-7.1	25	4167324-21	9-6	22
4167321-105	9-7.2	25	4167324-25	9-6	21
4167321-5	9-6	4	4167324-27	9-7.1	9
4167321-7	9-7	4	4167324-27	9-7.2	9
4167321-9	9-7	4	4167324-29	9-7.1	17
4167322-17	9-6	5	4167324-29	9-7.2	17
4167322-17	9-7	5	4167325-15	9-6	17
4167322-19	9-6	3	4167325-15	9-7	17
4167322-19	9-7	3	4167325-17	9-6	15
4167322-21	9-6	1	4167325-17	9-7	15
4167322-21	9-7	1	4167325-19	9-6	17
4167322-23	9-6	2	4167325-21	9-7.1	11
4167322-23	9-7	2	4167325-21	9-7.2	11
4167322-5	9-7.1	1	4167326-7	9-7	–
4167322-5	9-7.2	1	4167326-9	9-6	–
4167323-11	9-6	11	4167327-11	9-6	26
4167323-11	9-7	11	4167327-13	9-6	24
4167323-11	9-7.1	4	4167327-15	9-7	22
4167323-11	9-7.2	4	4167327-17	9-7	20
4167323-13	9-6	12	4167327-19	9-7.1	21
4167323-13	9-7	12	4167327-19	9-7.1	36
4167323-13	9-7.1	3	4167327-19	9-7.2	21
4167323-13	9-7.2	3	4167327-19	9-7.2	29
4167323-15	9-6	7	4167328-1	9-6	31
4167323-15	9-7	7	4167328-1	9-7	25
4167323-15	9-7.1	7	4167328-11	9-7	21
4167323-15	9-7.2	7	4167328-3	9-7.1	22
4167323-17	9-6	10	4167328-3	9-7.2	22
4167323-17	9-7	10	4167333-11	9-12	–
4167323-17	9-7.1	5	4167338-11	9-7.1	33

UNCONTROLLED COPY WHEN DOWNLOADED OR PRINTED

Visit www.enstromhelicopter.com for instructions to order an original manual and to register for email notification of updates.

PART NUMBER INDEX

Part Number	Figure	Item	Part Number	Figure	Item
4167338-11	9-7.2	26	4172000-7	3-11	2
4167340-1	9-7.2	–	4172000-9	3-11	–
4167340-3	9-7.1	–	4172000-9	3-9	1
4167340-5	9-7.2	–	4172001-1	3-10	1
4167360-17	6-6	22	4172001-3	3-10	2
4167370-1	6-7.1	–	4172001-5	3-10	1
4167370-3	6-7.1	9	4174000-7	3-1	50
4167370-7	6-7.1	–	4174000-9	3-1	40
4167371-1	6-7.2	7	4174001-101	4-2	2
4167371-17	6-7.2	2	4174001-102	4-2	2
4167371-19	6-7.1	4	4174001-103	4-2	4
4167371-19	6-7.2	13	4174001-104	4-2	4
4167371-21	6-7.2	9	4174001-105	4-2	3
4167371-25	6-7.2	12	4174001-107	4-2	3
4167371-3	6-7.2	3	4174002-7	4-1	1
4167371-31	6-7.2	11	4174002-9	4-1	19
4167371-31	6-7.2	17	4174003-1	4-2	1
4167371-33	6-7	12	4174003-3	4-2	1
4167371-37	6-7.2	2	4174004-1	4-2	–
4167372-1	6-7	3	4174004-3	4-2	–
4167372-1	6-7	8	4174007-5	4-2	6
4167373-1	6-7.1	13	4174007-7	4-2	7
4167373-1	6-7.2	22	4174007-8	4-2	7
4167374-11	6-7.1	1	4174008-11	4-2	–
4167511-5	9-1	38	4174008-11	4-2	–
4167521-19	9-1	40	4174008-15	4-2	–
4167521-21	9-1	37	4174008-17	4-2	–
4168000-11	9-14	42	4174009-13	4-2	5
4168001-1	9-14	–	4174012-11	4-2	15
4168001-5	9-14	–	4174012-13	4-2	16
4168001-7	9-14	–	4174013-903	4-1	6
4168001-9	9-14	–	4174013-903	4-1	25
4168002-11	9-14	42	4174014-11	4-1	2
4168002-13	9-14	42A	4174014-11	4-1	20
4172000-101	3-10	–	4174015-11	4-4	26
4172000-101	3-9	1	4174016-101	4-4	17
4172000-5	3-11	1	4174016-7	4-4	17

UNCONTROLLED COPY WHEN DOWNLOADED OR PRINTED

Visit www.enstromhelicopter.com for instructions to order an original manual and to register for email notification of updates.

PART NUMBER INDEX

Part Number	Figure	Item	Part Number	Figure	Item
4174018-1	3-1	60	4182127-5	3-1	260
4174019-1	4-5	5	4182142-1	11-5	80
4174019-101	4-5	9	4182142-1	6-5	–
4174019-102	4-5	4	4182310-13	10-33	1
4174019-104	4-5	10	4182310-15	10-33	2
4174019-2	4-5	6	4182310-17	10-33	–
4174019-3	4-5	7	4182310-19	10-33	–
4174019-4	4-5	8	4182310-21	10-33	1
4174019-7	4-5	1	4192083-1	10-18	21
4174019-8	4-5	2	4192083-15	10-18	22
4174019-9	4-5	3	4192083-15	10-19	5
4174020-11	4-5	–	4192083-19	10-21	1
4174020-11	4-5	–	4192083-9	10-18	20
4174020-13	4-5	–	4192102-4	10-16	20
4174020-13	4-5	–	4192102-903	10-16	20
4174020-13	4-5	–	4192507-103	10-37	70
4174020-13	4-5	–	4192508-939	7-9	10
4174020-15	4-4	31	4192509-3	5-12	190
4174021-11	4-5	16	4192509-901	7-8	30
4174021-12	4-5	17	4192509-901	7-8.1	27
4174022-11	4-5	11	4192514-37	10-24.2	1
4174022-12	4-5	12	4192514-67	10-24.1	15
4174024-11	4-5	21	4192514-69	10-24.1	12
4174027-11	4-4	27	4192514-71	6-7.3	40
4174032-11	4-6	1	4192514-998	10-26	–
4174032-12	4-6	1	4192570-1	10-36	9
4174033-1	4-6	8	4193003-1	10-25	1
4174033-17	4-6	11	4193003-3	10-25	2
4174033-2	4-6	8	4193003-5	10-25	1
4174034-11	4-5	25	4193003-5	10-26	1
4174501-4	4-3	1	4193003-7	10-25	2
4174501-4	4-4	–	4193003-7	10-26	2
4174501-5	4-3	1	4196518-19	11-1	48
4174501-5	4-4	–	4196529-3	3-21	220
4174501-901	4-4	16	4196536-1	10-33	12
4174501-904	4-4	–	4196536-25	10-33	18
4174501-905	4-4	–	4196536-5	10-33	12

UNCONTROLLED COPY WHEN DOWNLOADED OR PRINTED

Visit www.enstromhelicopter.com for instructions to order an original manual and to register for email notification of updates.

PART NUMBER INDEX

Part Number	Figure	Item	Part Number	Figure	Item
4196540-11	10-14	8	4196580-1	10-14	2
4196540-11	10-14	12	4196580-1	10-15	5
4196550-1	10-14	4	4196595-11	10-19	4
4196550-17	10-14	–	4196597-1	10-12	9
4196551-1	10-12	17	4196597-1	10-13	13
4196551-1	10-13	24	4196600-11	10-4	23
4196551-3	10-12	17	4196652-101	10-18	22
4196551-3	10-13	24	4196652-101	10-19	5
4196555-5	10-16	11	4196652-3	10-18	20
4196555-7	10-16	11	4196652-7	10-21	1
4196555-9	10-16	11	4199003-101	10-33	18
4196556-13	10-23	4	4199003-103	10-33	–
4196557-1	3-21	–	4199003-11	10-33	–
4196558-5	10-18	29	4199005-901	10-29	–
4196562-11	10-1	14	4199006-5	10-36	7
4196562-11	10-2	14	4199008-7	9-1	24
4196562-11	10-3	14	4199008-8	9-1	23
4196562-11	10-4	14	4199011-3	9-4	24
4196569-1	10-14	3	4199011-3	9-7	–
4196569-1	10-15	6	4199017-1	10-24.1	–
4196578-1	10-12	1	4199019-11	10-27	9
4196578-3	10-13	1	4199019-13	10-27	11
4196578-5	10-13	1	4199019-15	10-27	1
4196579-1	10-13	17	4199019-17	10-27	2
4196579-101	10-12	13	4199019-19	10-27	3
4196579-19	10-12	–	4199019-21	10-27	12
4196579-19	10-13	–	4199041-1	10-33	3
4196579-21	10-13	2	4199041-13	10-33	5
4196579-23	10-13	6	4199042-11	10-17	12
4196579-25	10-13	7	4199042-13	10-17	12
4196579-27	10-13	10	4199042-27	10-17	26
4196579-29	10-13	9	4199045-103	9-1	23
4196579-31	10-13	8	4199045-105	9-1	25
4196579-31	10-14	–	4199045-109	9-1	23
4196579-31	10-15	–	4199045-111	9-1	25
4196579-7	10-12	13	4199045-131	9-1	23
4196579-9	10-13	17	4199045-133	9-1	25

UNCONTROLLED COPY WHEN DOWNLOADED OR PRINTED

Visit www.enstromhelicopter.com for instructions to order an original manual and to register for email notification of updates.

PART NUMBER INDEX

Part Number	Figure	Item
4199046-1	9-4	25
4199046-1	9-7	–
4199046-3	9-4	23
4199046-3	9-6	–
4199046-3-R	9-6	–
4199046-R	9-4	23
4199049-1	3-21	290
4199052-11	10-16	7
4199057-1	6-2	1
4199057-13	6-2	4
4199057-15	6-2	4
4199057-3	6-2	1
4199059-1	10-16	20
4199059-3	10-16	20
4199067-1	3-21	150
4199067-101	3-21	190
4199067-3	3-21	160
4199067-5	3-21	170
4199067-7	3-21	180
4199070-1	10-24.2	–
4199071	10-23.1	–
4199072-11	9-4	33
4199072-13	10-23	12
4199072-13	9-4	34
4199080-901	9-4	25
4199080-901	9-7.2	–
4199080-903	9-4	23
4199080-903	9-7.1	–
4200000-( )	3-8	43
4200000-10	3-8	–
4200000-101	3-8	–
4200000-103	3-8	10
4200000-104	3-8	11
4200000-9	3-8	–
4200002-11	3-8	5
4200008-11	3-8	20
4200009-11	3-8	7
4200009-13	3-8	6
4200011-7	3-8	19
4200017-1	10-30	8
4200017-1	3-8	30
4200017-2	10-30	8
4200017-2	3-8	31
4212101-101	10-29	–
4212101-5	10-29	–
4212101-7	10-29	–
4212101-9	10-29	–
4212102-11	10-29	50
4212103-19	10-28	12
4212103-21	10-28	8
4212103-21	10-29	160
4212103-23	10-29	200
4212103-25	10-29	20
4212103-27	10-29	230
4212103-29	10-29	30
4212103-31	10-29	20
4212103-33	10-29	30
4212103-35	10-29	30
4212103-5	10-28	1
4212103-5	10-29	–
4212103-7	10-29	–
4212104-11	10-28	15
4212104-13	10-29	80
4220035-1	5-12	–
4220037	6-3	–
4220037-1	6-3	63
4220037-15	6-3	–
4220037-2	6-3	–
4220037-3	6-3	58
4220037-5	6-3	49
4220039-1	5-12	10
4220039-3	5-12	20
4220043-3	3-5	–
4220044-13	3-5	30

UNCONTROLLED COPY WHEN DOWNLOADED OR PRINTED

Visit www.enstromhelicopter.com for instructions to order an original manual and to register for email notification of updates.

PART NUMBER INDEX

Part Number	Figure	Item	Part Number	Figure	Item
4220044-21	3-5	50	4508-1	10-33	13
4220044-22	3-5	60	4508-1	6-11	27
4220125-19	3-19	–	4508-1	6-12	29
4220132-1	4-2	6	4508-1	6-3	–
4220132-1	4-2	7	4508-1	6-3	–
4220143-1	10-37	50	4508-1	6-3	–
4220150-3	3-2	1	4516	3-2	–
4220150-4	3-2	2	4516-75	11-4	2
4220150-5	3-2	1	4516-75	3-2	–
4220150-6	3-2	2	4516-75	3-3	21
4220152-11	3-6.2	20	4596	10-28	5
4220152-13	3-6.2	30	4604-12-12-0	6-1	46
4220152-14	3-6.2	30	464	11-6	140
4220153-1	3-6.2	–	4-8 F5OX-S	7-9	11
4220171-1	11-6	10	4910-50	3-4	250
4220521-1	10-38	10	4910-50	6-3	–
4220521-3	10-39	10	4941	3-3	23
4230001-1	7-1	–	4941	6-2	7
4230005-11	3-19	2	4F5BX-SS	6-1	7
4230005-13	3-19	13	4F650X-S	5-12	100
4230012-1	10-4	–	4R6BX-SS	10-20	10
4230019-1	10-19	–	5/16 Harper	6-13	7
428-3VG	App A	–	5/16 Harper	9-13	19
428-3-VG	9-14	38	500130	5-6	5
428-3-VG	App A	–	500150	5-6	10
4-3 F5OX-SS	6-1	9	5008-75	9-6	23
43-13-1-24	3-13	–	5-01-090701 Rev A	3-18	29
43-13-1-24	3-13	–	5-01-095701 Rev A	3-18	28
43-13-1-24	3-13	–	502	9-1	27
43-13-1-24	3-13	–	5045	8-3	20
436-19	6-9	2	506	10-28	–
439SS-4-2-6	5-10	7	506	10-29	–
439SS-4-8-2-6	5-11	70	506	10-33	–
439-SS4-8-2-6	10-38	20	5100-50	5-8	48
444-4-2-6	5-11	20	5100-68	5-8	41
444-4-2-6	5-5	35	5100-68	5-8	82
444-4-2-6	5-6	41	5103-62	3-17	25

UNCONTROLLED COPY WHEN DOWNLOADED OR PRINTED

Visit www.enstromhelicopter.com for instructions to order an original manual and to register for email notification of updates.

PART NUMBER INDEX

Part Number	Figure	Item	Part Number	Figure	Item
51086	8-5	8	60617-1	10-1	–
5133-18-S-PP	3-6	410	60617-1	10-1	–
5133-18-S-PP	3-6	840	60617-1	10-1	–
5133-25-S-PP	3-6	150	60617-1	10-2	–
5133-25-S-PP	3-6	350	60617-1	10-2	–
520-004	10-13	29	60617-1	10-2	–
520-004	10-14	–	60617-1	10-2	–
520-004	10-15	2	60617-1	10-2	–
520-006	10-34	4	60617-1	10-24.1	13
52305-A06-6	9-1	28	60617-1	10-3	–
524-080	6-1	51	60617-1	10-3	–
5451	4-5	23	60617-1	10-37	–
5453	3-12	–	60617-1	10-4	–
5453	9-2	–	60617-1	10-4	–
5453	9-2	–	60618-1	10-1	–
5480	4-5	26	60618-1	10-1	–
58390	10-23	2	60618-1	10-1	–
5934PD-3-A.253	10-1	3	60618-1	10-1	–
5934PD-3-A.253	10-2	3	60618-1	10-18	–
5934PD-3-A.253	10-3	3	60618-1	10-2	–
5934PD-3-A.253	10-4	3	60618-1	10-2	–
6 X1/2	4-5	18	60618-1	10-2	–
601-6	3-16	3	60618-1	10-2	–
601985-2	10-18	–	60618-1	10-2	–
601985-2	10-18	–	60618-1	10-24.2	12
601985-2	10-19	–	60618-1	10-29	–
603817-4	10-18	–	60618-1	10-3	–
603817-4	10-18	–	60618-1	10-3	–
603817-4	10-19	–	60618-1	10-37	–
603864	6-1	53	60618-1	10-4	–
604111-1	10-18	–	60618-1	10-4	–
604111-1	10-18	–	60618-1	5-7	–
604111-1	10-19	–	60618-1	6-1	–
60434	5-6	3	60620-1	7-9	–
60607-1	6-7.3	80	60652	5-6	8
60617-0	10-24.1	13	608036-1	6-1	112
60617-1	10-1	–	6-1437622-0	11-6	210

UNCONTROLLED COPY WHEN DOWNLOADED OR PRINTED

Visit www.enstromhelicopter.com for instructions to order an original manual and to register for email notification of updates.

PART NUMBER INDEX

Part Number	Figure	Item	Part Number	Figure	Item
6-1616945-7	10-16	1	726607	10-23	1
6-1616945-7	10-17	1	726621	7-8	30
6-1616945-7	10-18	9	726621	7-8.1	27
6-4 F5OX-S	7-9	12	7270-1-35	10-9	13
6502-12	6-9	23	7270-1-35	10-9	13
65143	5-6	6	7270-1-5	10-1	28
6-6FBTX-SS	6-4	9	7270-1-5	10-2	25
68-2290005-30	10-31	11	7270-1-5	10-2	27
68-2290005-30	App A	–	7270-1-5	10-7	3
68-2290005-34	10-32	7	7270-1-5	10-7	5
6839	10-1	–	7270-1-5	10-8	3
6839	10-2	–	7270-1-5	10-8	5
6839	10-3	–	7270-1-5	10-9	3
6839	10-4	–	7270-1-5	10-9	3
68-3950902A30	10-32	4	7270-1-5	10-9	5
68-3950903A30	10-32	2	7270-1-5	10-9	5
68-4230020-40	10-31	6	7270-1-7 1/2	10-1	27
68-4230020-40	App A	–	7270-1-7 1/2	10-2	26
68-4230020-50	10-31	6	7270-1-7 1/2	10-33	–
68-4230020-50	App A	–	7270-1-7 1/2	10-7	4
68-4250066-30	10-31	10	7270-1-7 1/2	10-8	4
68-4250066-30	App A	–	7270-1-7 1/2	10-9	4
6EBTX-SS	7-9	18	7270-1-7 1/2	10-9	4
6R X 3/8	App A	–	7277-5-1	10-9	6
6RX1/2	App A	–	7277-5-1 1/2	10-7	8
6RX3/8	9-2	64	7277-5-1 1/2	10-8	8
6RX3/8	App A	–	7277-5-1 1/2	10-9	
6X1/2	App A	–	7277-5-1 1/2	10-9	6
6X3/8	4-2	–	7277-5-1 1/2	10-9	9
6X3/8	11-3	3	7277-5-1/2	10-9	14
6X3/8	App A	–	7277-5-1/2	10-9	14
70-0160-1056-6	3-3	26	7277-5-1/2	11-6	–
7101SYZQE	10-4	22A	7277-5-1/2	11-6	–
71478S	6-7.2	16	7277-5-1/2	11-6	–
7201SYZQE	10-1	22	7277-5-10	10-7	9
7201SYZQE	10-2	22	7277-5-10	10-8	9
7203K2ZQE	10-36	3	7277-5-10	10-9	10

UNCONTROLLED COPY WHEN DOWNLOADED OR PRINTED

Visit www.enstromhelicopter.com for instructions to order an original manual and to register for email notification of updates.

PART NUMBER INDEX

Part Number	Figure	Item
7277-5-10	10-9	16
7277-5-2	10-7	6
7277-5-2	10-8	6
7277-5-2	10-9	7
7277-5-2	10-9	7
7277-5-3	10-37	30
7277-5-3	10-7	7
7277-5-3	10-8	7
7277-5-3	10-9	8
7277-5-3	10-9	8
7277-5-5	10-36	4
7277-5-5	10-9	9
732BL	11-5	140
732-RTV	10-24.2	5
732-RTV	10-33	13
732-RTV	3-3	–
732-RTV	6-3	38
7401SYZQE	10-3	22
7401SYZQE	10-4	22
748-RTV	10-24.2	5
748-RTV	10-36	18
748-RTV	10-39	20
7592	11-6	30
7641-20	10-14	1
76638	5-6	9
76640	5-6	11
76642	5-6	4
767	6-4	–
77345-09.0HG-01	7-9	15
786-4	5-11	190
786-4-CU	5-10	2
786-4-CU	5-5	43
8000B.439	10-1	2
8000B.439	10-2	2
800-28V-BAT	10-1	4
800-28V-BAT	10-2	4
800-28V-BAT	10-3	4
800-28V-BAT	10-4	4
803-28V	10-4	4
801-4	5-5	–
801-4	5-5	–
801-8	5-5	–
801-8	5-6	18
8116-B	7-9	–
82043-22420	8-5	7
82-12-120-16	3-19	18
8-218-N300-9	4-4	4
82-19-140-16	3-18	48
82-19-160-16	3-13	–
82-19-160-16	3-13	–
82-19-160-16	3-13	–
82-19-160-16	3-13	2
82-19-160-16	3-2	–
82-19-160-16	3-2	–
82-19-160-16	3-2	–
82-32-101-20	3-13	–
82-32-101-20	3-13	–
82-32-101-20	3-13	–
82-32-101-20	3-13	4
82-32-101-20	3-18	50
82-32-101-20	3-19	19
82-32-101-20	3-2	–
82-32-101-20	3-2	–
82-32-101-20	3-2	–
82-35-302-15	3-19	7
82-35-306-10	3-13	–
82-35-306-10	3-13	–
82-35-306-10	3-13	16
82-36-302-15	3-18	–
82-46-101-39	3-13	–
82-46-101-39	3-13	–
82-46-101-39	3-13	–
82-46-101-39	3-13	3
82-46-101-39	3-18	49

UNCONTROLLED COPY WHEN DOWNLOADED OR PRINTED

Visit www.enstromhelicopter.com for instructions to order an original manual and to register for email notification of updates.

PART NUMBER INDEX

Part Number	Figure	Item	Part Number	Figure	Item
82-46-101-39	3-2	–	8X1/2	3-2	–
82-46-101-39	3-2	–	8X1/2	3-2	17
82-46-101-39	3-2	–	8X1/2	4-5	20
8-32X1/4in	6-7.2	1	8X1/2	6-1.1	30
8473 H5L16	App A	–	8X1/2	6-1.1	110
8473H5L16	7-8.1	–	8X1/2	6-1.1	180
8473RUPH5-L16	7-8	–	8X1/2	6-1.1	290
8473RUPH5-L16	App A	–	8X1/2	6-1.1	330
848-FSO-04-03	6-1	9	8X1/2	6-1.1	340
849-FSO-04X04	6-1	25	8X1/2	6-1.1	400
85-12-140-16	3-2	–	8X1/2	App A	–
85-12-140-16	3-2	–	8X3/8	6-1.1	370
85-12-140-16	3-2	–	90120075	6-1	61
85-12-140-16	3-2	–	90251A190	11-2	10
85-12-140-20	3-2	–	90251A190	11-2	26
85-12-140-20	3-2	–	90312A11	9-14	60
85-12-140-20	3-2	–	90-42130-009	10-1	–
85-12-140-20	3-2	–	90-42130-009	10-2	–
85-34-101-20	3-2	–	90-42130-009	10-3	–
85-34-101-20	3-2	–	90-42130-009	10-3	–
85-34-101-20	3-2	–	90-42130-009	10-4	–
85-34-101-20	3-2	–	90-42130-010	10-1	–
85-35-295-15	3-2	–	90-42130-010	10-2	–
85-35-295-15	3-2	–	90-42130-010	10-3	–
85-46-101-39	3-2	–	90-42130-010	10-3	–
85-46-101-39	3-2	–	90-42130-010	10-4	–
85-46-101-39	3-2	–	90-42130-011	10-1	–
85-46-101-39	3-2	–	90-42130-011	10-2	–
8618M25	6-8	14	90-42130-011	10-3	–
8-8MTX-SS	11-1	4	90-42130-011	10-3	–
8871T34	3-18	3	90-42130-011	10-4	–
8871T34	3-18	12	90-42130-012	10-1	–
8RX1/2	App A	–	90-42130-012	10-2	–
8x1/2	10-17	21	90-42130-012	10-3	–
8X1/2	3-2	–	90-42130-012	10-3	–
8X1/2	3-2	–	90-42130-012	10-4	–
8X1/2	3-2	–	90-42130-013	10-1	–

UNCONTROLLED COPY WHEN DOWNLOADED OR PRINTED

Visit www.enstromhelicopter.com for instructions to order an original manual and to register for email notification of updates.

PART NUMBER INDEX

Part Number	Figure	Item	Part Number	Figure	Item
90-42130-013	10-2	–	90-42130-022	10-3	–
90-42130-013	10-3	–	90-42130-022	10-4	–
90-42130-013	10-3	–	90-42130-023	10-1	–
90-42130-013	10-4	–	90-42130-023	10-2	–
90-42130-015	10-1	–	90-42130-023	10-3	–
90-42130-015	10-2	–	90-42130-023	10-3	–
90-42130-015	10-3	–	90-42130-023	10-4	–
90-42130-015	10-3	–	90-42130-024	10-1	–
90-42130-015	10-4	–	90-42130-024	10-2	–
90-42130-016	10-1	–	90-42130-024	10-3	–
90-42130-016	10-2	–	90-42130-024	10-3	–
90-42130-016	10-3	–	90-42130-024	10-4	–
90-42130-016	10-3	–	90-42130-026	10-1	–
90-42130-016	10-4	–	90-42130-026	10-2	–
90-42130-017	10-1	–	90-42130-026	10-3	–
90-42130-017	10-2	–	90-42130-026	10-3	–
90-42130-017	10-3	–	90-42130-026	10-4	–
90-42130-017	10-3	–	90-42130-028	10-3	–
90-42130-017	10-4	–	90-42130-028	10-4	–
90-42130-018	10-1	–	9080221	3-1	–
90-42130-018	10-2	–	9080331	3-1	–
90-42130-018	10-3	–	9080443	3-1	–
90-42130-018	10-3	–	9080494	10-13	28
90-42130-018	10-4	–	9080494	10-14	–
90-42130-019	10-1	–	9080494	10-15	1
90-42130-019	10-2	–	90D030N-2	10-4	35
90-42130-019	10-3	–	90D030N-MOD-2	9-7.1	20
90-42130-019	10-3	–	90D030N-MOD-2	9-7.2	20
90-42130-019	10-4	–	9253	7-9	15
90-42130-021	10-1	–	92X9537	7-6.1	10
90-42130-021	10-2	–	95-41-11-H6-55785	10-1	19
90-42130-021	10-3	–	95-41-11-H6-55785	10-2	19
90-42130-021	10-3	–	95-41-11-H6-55785	10-3	19
90-42130-021	10-4	–	95-41-11-H6-55785	10-4	19
90-42130-022	10-1	–	959-5	8-5	13
90-42130-022	10-2	–	97CSX-2 24VDC	App A	–
90-42130-022	10-3	–	A01784-6Z-1D	3-21	–

UNCONTROLLED COPY WHEN DOWNLOADED OR PRINTED

Visit www.enstromhelicopter.com for instructions to order an original manual and to register for email notification of updates.

PART NUMBER INDEX

Part Number	Figure	Item	Part Number	Figure	Item
A01787-8Z-1D	3-2	–	A315HI-B-28V	10-1	32
A01787-8Z-1D	6-1.1	100	A413AHDACF-14/28	10-30	1
A01787-8Z-1D	6-1.1	310	A4274	App A	–
A01787-8Z-1D	6-11	4	A427-4	10-31	7
A01787-8Z-1D	6-12	2	A427-4	App A	–
A01787-8Z-1D	App A	–	A507	10-31	3
A01789-8Z-1D	3-2	–	A507	App A	–
A01789-8Z-1D	4-4	32	A50828	App A	–
A01789-8Z-1D	4-5	–	A508-28	10-31	4
A01789-8Z-1D	4-5	–	A508-28	App A	–
A01789-8Z-1D	App A	–	A600PG28	App A	–
A06194-8Z-1D	6-11	13	A600-PG-28	10-30	4
A06194-8Z-1D	App A	–	A600-PG-28	10-31	–
A06195-6Z-1D	6-1.1	–	A600-PG-28	3-8	26
A06195-8Z-1D	3-2	–	A600-PG-28	App A	–
A06195-8Z-1D	3-2	–	A600PR28	App A	–
A06195-8Z-1D	3-2	–	A600-PR-28	10-30	4
A06195-8Z-1D	3-2	–	A600-PR-28	10-31	–
A06195-8Z-1D	3-2	–	A600-PR-28	3-8	25
A06195-8Z-1D	3-2	–	A600-PR-28	App A	–
A06195-8Z-1D	3-2	–	A605	10-31	1
A06195-8Z-1D	3-2	–	A605	App A	–
A06195-8Z-1D	3-2	18	A606	10-31	12
A06195-8Z-1D	4-5	–	A606	App A	–
A06195-8Z-1D	4-5	–	A610	10-31	8
A06195-8Z-1D	6-1.1	–	A610	App A	–
A06195-8Z-1D	6-1.1	–	A612	10-31	11
A06195-8Z-1D	6-1.1	–	A612	App A	–
A06195-8Z-1D	6-1.1	–	A615	10-31	10
A06195-8Z-1D	6-1.1	–	A615	App A	–
A06195-8Z-1D	6-11	12	A616	10-31	9
A06195-8Z-1D	6-12	14	A616	App A	–
A06195-8Z-1D	App A	–	A6194-8Z-1	App A	–
A10K130	11-6	110	A6195-8Z-1	App A	–
A1787-8Z1	App A	–	A-700	6-4	29
A1787-8Z-1	App A	–	A-700	App A	–
A1789-8Z-1	App A	–	A-700RD1180	App A	–

UNCONTROLLED COPY WHEN DOWNLOADED OR PRINTED

Visit www.enstromhelicopter.com for instructions to order an original manual and to register for email notification of updates.

PART NUMBER INDEX

Part Number	Figure	Item
A700RD11800	5-10	1
A700RD11800	5-11	10
A700RD11800	App A	–
A8944-632-493	10-1	–
A8944-632-493	10-1	–
A8944-632-493	10-1	–
A8944-632-493	10-1	–
A8944-632-493	10-2	–
A8944-632-493	10-2	–
A8944-632-493	10-2	–
A8944-632-493	10-2	–
A8944-632-493	10-2	–
A8944-632-493	10-3	–
A8944-632-493	10-3	–
A8944-632-493	10-3	–
A8944-632-493	10-4	–
A-8970B1-327	10-1	31
A-8970B1-327	10-2	31
A-8970B1-327	10-5	5
A-8970B1-327	10-6	5
A8P150	3-3	22
AA521-4	9-8	6
AA521-4	App A	–
AA-521-4	App A	–
AA521-8	9-5	15
AA-521-9	9-8	19
AA86146	7-8	38
AA86146	7-8.1	34
ABC6114	9-4	27
ABM1M-A-C	10-39	90
ABMM-AT-C	10-24	10
ABMM-AT-C	10-24.2	4
ABMM-AT-C	10-36	14
ABMS-A	5-5	31
ABMS-A	5-6	37
AC-B283F-107	6-9	35
ACC38-A-C20	10-39	30
ACC62-A-C20	10-39	40
ACF-50	8-3	–
AD-B283101	6-9	34
AD4( )BSLF	3-3	20
AJ4-30	3-2	–
AJ4-30	3-2	–
AJ4-30	3-2	–
AJ4-35	3-2	–
AJ4-35	3-2	–
AJ4-35	3-2	–
AJ4-35	3-2	–
AJ4-35	3-2	–
AJ4-35	3-2	–
AJ4-40	3-2	–
AJ4-40	3-2	–
AJC19-A-C	10-36	15
AJW4-30	6-11	21
AJW4-30	6-12	23
AN100C4	9-14	37
AN104607	6-6	26
AN104608	6-6	27
AN174-21	9-13	5
AN176-15A	8-3	42
AN176-15A	8-3	55
AN176-17A	7-6	20
AN176-17A	7-6.1	19
AN176-17A	8-3	43
AN178-21	8-6	5
AN2552-3A	10-16	14
AN3-10A	10-12	18
AN3-10A	10-13	25
AN3-10A	3-18	22
AN3-10A	5-9	2
AN3-10A	7-9	4
AN3115-1	10-33	22
AN3-11A	10-22	13
AN3-11A	4-4	18

UNCONTROLLED COPY WHEN DOWNLOADED OR PRINTED

Visit www.enstromhelicopter.com for instructions to order an original manual and to register for email notification of updates.

PART NUMBER INDEX

Part Number	Figure	Item	Part Number	Figure	Item
AN3-11A	5-12	30	AN316-4R	9-2	21
AN3-11A	5-8	65	AN316-4R	9-5	3
AN3-11A	5-9	2	AN316-4R	9-5	19
AN3-11A	6-1.1	410	AN316-4R	9-8	15
AN3-11A	7-9	4	AN316-5L	9-13	13
AN3-11A	9-4	30	AN316-5L	9-15	25
AN3-12	9-14	25	AN316-5L	9-5	–
AN3-12A	8-3	29	AN316-5R	11-2	6
AN315-3L	6-6	15	AN316-5R	11-2	22
AN315-3L	6-7	4	AN316-5R	9-13	11
AN315-3l	6-7	7	AN316-5R	9-15	26
AN315-3L	6-8	12	AN316-5R	9-5	–
AN315-3L	7-3	16	AN316-6R	3-17	16
AN315-3R	3-6	570	AN316-6R	3-18	4
AN315-3R	3-6	720	AN316-6R	3-18	13
AN315-3R	6-6	4	AN316-7	6-6	3
AN315-3R	6-6	17	AN316-8	5-9	10
AN315-3R	6-7	2	AN316-8R	5-9	10
AN315-3R	6-7	9	AN3-16A	6-14	3
AN315-3R	6-8	3	AN3-16A	9-1	7
AN315-3R	6-8	10	AN3-16A	9-9	19
AN315-3R	7-3	14	AN3-17A	3-9	9
AN315-4R	9-14	30	AN320-4	9-10	13
AN3-15A	3-11	3	AN320-6	9-11	11
AN3-15A	6-10	19B	AN320-6	9-12	27
AN315C4R	10-17	8	AN320-7	9-11	9
AN316-4	6-8	16	AN320-8	9-12	33
AN316-4L	9-14	6	AN3-20A	3-10	6
AN316-4L	9-14	11	AN3-20A	4-6	12
AN316-4L	9-2	23	AN3-3A	10-12	4
AN316-4L	9-5	5	AN3-3A	10-13	21
AN316-4L	9-5	21	AN3-3A	11-1	32
AN316-4L	9-8	17	AN3-3A	6-14	6
AN316-4R	6-7	22	AN3-3A	6-3	33
AN316-4R	6-7.2	19	AN3-3A	9-2	47
AN316-4R	9-14	5	AN3-3A	9-2	57
AN316-4R	9-14	10	AN3-3A	9-9	8

UNCONTROLLED COPY WHEN DOWNLOADED OR PRINTED

Visit www.enstromhelicopter.com for instructions to order an original manual and to register for email notification of updates.

PART NUMBER INDEX

Part Number	Figure	Item	Part Number	Figure	Item
AN340-2	10-23	10	AN3-4A	6-9	3
AN340-4	9-3	37	AN3-4A	6-9	31
AN340-6	10-1	–	AN3-4A	9-4	32
AN340-6	10-2	–	AN3-5	9-14	45
AN340-6	10-3	–	AN3-5A	3-18	45
AN340-8	10-1	–	AN3-5A	3-9	15
AN340-8	10-2	–	AN3-5A	4-2	26
AN340-8	10-21	7	AN3-5A	6-10	19A
AN340-8	10-22	9	AN3-5A	6-10	9
AN340-8	10-24	7	AN3-5A	6-3	23
AN340-8	10-3	–	AN3-5A	6-9	33
AN340-8	10-4	–	AN3-5A	7-10	12
AN340-8	11-2	11	AN3-5A	7-9	7
AN340-8	11-2	27	AN3-5A	9-9	1
AN340-8	5-8	18	AN3-6	9-14	40
AN340-8	5-8	58	AN364-1032	3-4	160
AN340-8	6-1	82	AN364-1032	3-4	210
AN340-8	6-1	109	AN364-1032A	10-12	6
AN340-832	10-20	8	AN364-1032A	10-12	12
AN340-832	5-8	87	AN364-1032A	10-12	16
AN340-832	6-1	31	AN364-1032A	10-12	20
AN340-832	6-4	15	AN364-1032A	10-13	16
AN340-832	9-12	39	AN364-1032A	10-13	20
AN345-10	6-7.1	10	AN364-1032A	10-13	23
AN3-4A	10-12	14	AN364-1032A	10-13	27
AN3-4A	10-13	18	AN364-1032A	10-17	27
AN3-4A	10-14	5	AN364-1032A	10-18	8
AN3-4A	10-14	10	AN364-1032A	10-18	26
AN3-4A	10-14	14	AN364-1032A	10-27	14
AN3-4A	10-18	7	AN364-1032A	11-1	31
AN3-4A	10-18	30	AN364-1032A	3-12	15
AN3-4A	3-18	22	AN364-1032A	3-6	180
AN3-4A	3-18	45A	AN364-1032A	3-6	600
AN3-4A	3-8	15	AN364-1032A	3-6	750
AN3-4A	5-5	56	AN364-1032A	3-8	44
AN3-4A	6-11	24	AN364-1032A	5-2	110
AN3-4A	6-12	26	AN364-1032A	5-2	150

UNCONTROLLED COPY WHEN DOWNLOADED OR PRINTED

Visit www.enstromhelicopter.com for instructions to order an original manual and to register for email notification of updates.

PART NUMBER INDEX

Part Number	Figure	Item	Part Number	Figure	Item
AN364-1032A	5-2	190	AN364-624A	8-3	45
AN364-1032A	5-2	250	AN364-632A	10-1	–
AN364-1032A	5-2	710	AN364-632A	10-18	14
AN364-1032A	5-2	770	AN364-632A	10-18	37
AN364-1032A	5-2	800	AN364-632A	10-19	–
AN364-1032A	5-2	830	AN364-632A	10-19	8
AN364-1032A	5-5	8	AN364-632A	10-28	11
AN364-1032A	5-6	16	AN364-632A	10-29	120
AN364-1032A	5-8	66	AN364-632A	10-29	180
AN364-1032A	5-9	4	AN364-632A	10-4	–
AN364-1032A	6-1	79	AN364-632A	11-4	7
AN364-1032A	6-10	5	AN364-632A	11-6	170
AN364-1032A	6-10	5	AN364-632A	8-7	31
AN364-1032A	6-11	26	AN364-832A	10-33	9
AN364-1032A	6-12	28	AN364-832A	11-1	19
AN364-1032A	7-10	–	AN364-832A	11-1	39
AN364-1032A	7-10	–	AN364-832A	11-5	290
AN364-1032A	7-11	26	AN364-832A	3-3	18
AN364-1032A	7-4	20	AN364-832A	5-10	5
AN364-1032A	7-5	23	AN364-832A	5-11	240
AN364-1032A	7-9	6	AN364-832A	5-12	260
AN364-1032A	9-1	9	AN364-832A	5-2	460
AN364-1216A	8-3	40	AN364-832A	5-5	42
AN364-428A	3-6	110	AN364-832A	5-6	24
AN364-428A	4-1	5	AN364-832A	6-1	76
AN364-428A	4-1	23	AN364-832A	6-3	56
AN364-428A	4-2	24	AN364-832A	6-4	7
AN364-428A	4-6	4	AN364-832A	6-4	18
AN364-428A	5-2	300	AN364-832A	6-9	52
AN364-428A	8-7	28	AN364-832A	7-3	29
AN364-524A	4-4	28	AN365-1032A	10-16	17
AN364-524A	7-4	28	AN365-1032A	10-18	10
AN364-524A	7-5	31	AN365-1032A	10-18	32
AN364-524A	7-6	5	AN365-1032A	3-10	9
AN364-524A	7-6.1	5	AN365-1032A	3-11	5
AN364-624A	3-1	330	AN365-1032A	3-15	9
AN364-624A	4-1	35	AN365-1032A	3-19	16

UNCONTROLLED COPY WHEN DOWNLOADED OR PRINTED

Visit www.enstromhelicopter.com for instructions to order an original manual and to register for email notification of updates.

PART NUMBER INDEX

Part Number	Figure	Item	Part Number	Figure	Item
AN365-1032A	3-8	9	AN365-624A	8-3	57
AN365-1032A	4-4	20	AN365-632A	4-4	13
AN365-1032A	4-6	14	AN365-832	9-14	62
AN365-1032A	5-12	50	AN365-832A	10-18	17
AN365-1032A	5-9	4	AN365-832A	3-13	29
AN365-1032A	6-10	17	AN365-832A	9-14	62
AN365-1032A	6-9	6	AN3-6A	10-14	9
AN365-1032A	6-9	42	AN3-6A	10-14	13
AN365-1032A	7-11	26	AN3-6A	6-9	3
AN365-1032A	7-3	22	AN3-6A	7-3	17
AN365-1032A	7-8	37	AN3-6A	7-9	4
AN365-1032A	9-2	48	AN370-3	6-9	56
AN365-1032A	9-2	58	AN3-7A	6-10	13
AN365-428A	3-6.1	140	AN3-7A	6-9	29
AN365-428A	3-9	4	AN3-7A	7-3	17
AN365-428A	4-1	12	AN3-7A	7-3	19
AN365-428A	4-1	31	AN3-7A	7-9	4
AN365-428A	4-2	10	AN380-4-8	8-3	24
AN365-428A	6-10	26	AN381-2-10	3-6.1	90
AN365-428A	6-9	39	AN381-2-10	9-15	22
AN365-428A	7-10	18	AN381-2-12	9-11	10
AN365-428A	7-3	11	AN381-2-16	9-15	14
AN365-428A	7-8.2	80	AN381-2-7	9-14	18
AN365-524A	4-1	9	AN381-2-8	6-1	86
AN365-524A	4-1	28	AN381-2-8	9-10	6
AN365-524A	4-2	14	AN381-2-8	9-13	8
AN365-524A	4-3	8	AN381-3-12	9-1	35
AN365-524A	4-4	25	AN381-3-12	9-12	28
AN365-524A	4-6	7	AN381-3-12	9-14	43
AN365-524A	6-13	8	AN381-3-16	8-6	9
AN365-524A	6-6	20	AN381-3-16	9-12	34
AN365-524A	8-1	16	AN381-3-8	10-33	4
AN365-524A	8-2	16	AN386-2-7A	7-11	24
AN365-624A	4-2	21	AN386-2-8A	6-10	3
AN365-624A	4-3	4	AN386-2-8A	6-10	3
AN365-624A	7-6	22	AN386-2-8A	7-8	35
AN365-624A	7-6.1	21	AN386-2-9A	6-10	3

UNCONTROLLED COPY WHEN DOWNLOADED OR PRINTED

Visit www.enstromhelicopter.com for instructions to order an original manual and to register for email notification of updates.

PART NUMBER INDEX

Part Number	Figure	Item
AN386-2-9A	7-10	–
AN386-2-9A	7-10	–
AN386-2-9A	7-4	18
AN386-2-9A	7-5	21
AN3-8A	11-1	29
AN393-9	3-2	–
AN3H3A	6-7.1	3
AN3H-3A	7-11	28
AN3H4A	9-12	36
AN3H5A	7-3	2
AN3H5A	7-10	12
AN4076-1	7-8	8
AN4076-1	7-8.1	5
AN4-10A	3-8	3
AN4-11	9-13	9
AN4-11A	3-10	10
AN4-13	9-15	28
AN4-13	9-15	38
AN4-14	9-10	1
AN4-14	9-15	38
AN4-14A	4-1	10
AN4-14A	4-1	29
AN416-1	9-1	27
AN4-17A	3-9	5
AN4-17A	3-12	7
AN4-17A	3-18	33
AN4-17A	7-8.2	59
AN4-20A	3-12	7
AN4-21A	3-9	19
AN4-21A	6-9	37
AN4-22A	3-9	2
AN4-22A	6-9	41
AN4-25A	3-12	7
AN4-26A	3-12	7
AN42B-14A	3-4	180
AN4-33A	4-2	8
AN4-34A	4-1	3
AN4-34A	4-1	24
AN4-36A	4-6	2
AN4-37A	4-1	21
AN4-37A	4-2	22
AN4-3A	10-18	27
AN4-3A	7-8	22
AN4-3A	7-8.1	19
AN4-4A	5-12	80
AN4-5A	3-18	31
AN4-5A	5-12	80
AN4-5A	8-7	26
AN4-6A	3-18	37
AN4-6A	7-6	16
AN4-6A	7-6.1	15
AN470AD3-5	3-5	70
AN4-7A	3-18	40
AN4-7A	6-10	23
AN4C5A	10-17	4
AN4C6A	10-17	5
AN4H10A	8-5	17
AN4H15A	8-5	28
AN4H3A	5-1	6
AN4H-4A	8-7	25
AN4H-4A	9-12	17
AN4-7A	7-10	15
AN4H5A	7-3	9
AN4H7A	7-10	15
AN4-XXX	10-24.1	16
AN502-10-10	9-12	36
AN502-10-10	9-3	39
AN502-10-12	7-11	17
AN502-10-8	9-3	16
AN503-10-10	9-10	15
AN503-10-10	9-12	11
AN503-10-18	9-15	4
AN503-10-6	11-2	15
AN503-10-6	11-2	32

UNCONTROLLED COPY WHEN DOWNLOADED OR PRINTED

Visit www.enstromhelicopter.com for instructions to order an original manual and to register for email notification of updates.

PART NUMBER INDEX

Part Number	Figure	Item	Part Number	Figure	Item
AN503-8-6	6-11	5	AN5158R10	3-2	–
AN503-8-6	6-12	5	AN5158R10	3-2	–
AN503-8-6	9-3	29	AN5158R10	3-2	–
AN503-8-8	8-2	49	AN515-8R10	10-21	4
AN503-8-8	9-3	9	AN515-8R10	10-24.1	4
AN507-1024R7	6-4	22	AN515-8R10	5-10	8
AN507-1032R14	10-17	14	AN515-8R10	6-3	30
AN507-1032R8	3-19	14	AN515-8R10	6-4	14
AN507-632R4	10-30	5	AN515-8R12	6-1	29
AN507-632R4	3-8	29	AN515-8R14	10-21	8
AN507-632R7	10-30	7	AN515-8R14	10-23	3
AN507-632R7	3-8	28	AN515-8R14	7-3	27
AN507-6R8	3-16	7	AN515-8R6	11-1	42
AN507-832R-10	9-9	11	AN515-8R7	11-1	37
AN507-832R6	6-5	5	AN515-8R7	11-2	10
AN507-832R7	4-5	19	AN515-8R7	11-2	26
AN507-832R7	6-5	6	AN515-8R7	5-6	22
AN507-832R8	9-7.1	8	AN515-8R7	5-8	19
AN507-832R8	9-7.1	10	AN515-8R7	5-8	59
AN507-832R8	9-7.2	8	AN515-8R7	9-7.1	23
AN507-832R8	9-7.2	10	AN515-8R7	9-7.2	23
AN509-10R10	3-6.1	230	AN515-8R8	10-20	5
AN509-8R10	11-5	110	AN515-8R8	10-24.1	4
AN509-8R10	6-5	12	AN515-8R8	11-1	17
AN509-8R14	6-5	16	AN515-8R8	5-10	3
AN509-8R16	11-1	46	AN515-8R8	5-11	130
AN5-11	9-13	15	AN515-8R8	6-1	81
AN5-11A	7-5	28	AN515-8R8	6-1	108
AN5-12A	4-2	17	AN515-8R8	6-4	5
AN5-13A	4-2	17	AN515-8R8	6-4	19
AN5-13A	6-1	93	AN515-8R8	6-7.2	8
AN515-4R12	9-3	35	AN515-8R9	10-22	6
AN515-6R8	11-4	3	AN515-8R9	10-24	4
AN515-6R8	11-5	210	AN5-15A	4-2	12
AN515-8-10	5-12	250	AN515B6R10	10-1	–
AN515-8-12	5-12	300	AN515B6R10	10-1	–
AN515-832R7	5-8	88	AN515B6R10	10-2	–

UNCONTROLLED COPY WHEN DOWNLOADED OR PRINTED

Visit www.enstromhelicopter.com for instructions to order an original manual and to register for email notification of updates.

PART NUMBER INDEX

Part Number	Figure	Item	Part Number	Figure	Item
AN515B6R10	10-2	–	AN525-10R10	5-1	20
AN515B6R10	10-3	–	AN525-10R10	5-3	15
AN515B6R10	App A	–	AN525-10R10	5-4	15
AN515-B6R10	App A	–	AN525-10R10	6-3	2
AN515B6R14	10-4	–	AN525-10R10	6-3	37
AN515B6R16	10-1	–	AN525-10R10	6-3	39
AN515B6R16	10-1	–	AN525-10R10	7-9	9
AN515B6R16	10-1	–	AN525-10R12	3-8	21
AN515B6R16	10-1	–	AN525-10R12	5-2	170
AN515B6R16	10-2	–	AN525-10R12	6-3	42
AN515B6R16	10-2	–	AN525-10R12	7-9	9
AN515B6R16	10-2	–	AN525-10R14	3-8	21
AN515B6R16	10-2	–	AN525-10R14	3-8	32
AN515B6R16	10-2	–	AN525-10R14	5-2	130
AN515B6R16	10-3	–	AN525-10R14	7-9	9
AN515B6R16	10-3	–	AN525-10R16	5-2	220
AN515B6R16	10-3	–	AN525-10R18	5-1	15
AN515B6R16	10-4	–	AN525-10R6	6-3	3
AN515B6R16	10-4	–	AN525-10R6	6-3	6
AN515B6R16	10-4	–	AN525-10R6	7-1.1	100
AN515B6R4	10-10	6	AN525-10R7	5-1	19
AN515B6R7	10-1	–	AN525-10R7	5-3	14
AN515B6R7	10-2	–	AN525-10R7	5-4	14
AN515B6R7	10-3	–	AN525-10R7	6-3	9
AN515B6R7	10-3	–	AN525-10R7	6-3	9
AN515B6R7	10-4	–	AN525-10R8	11-6	80
AN515B8R8	10-1	–	AN525-10R8	3-13	30
AN515B8R8	10-2	–	AN525-10R8	3-19	10
AN515B8R8	10-3	–	AN525-10R8	5-3	17
AN515B8R8	10-4	–	AN525-10R8	5-4	17
AN5-16	9-13	18	AN525-416R8	5-1	23
AN5-16A	4-3	6	AN525-416R10	5-1	23
AN5-16A	4-4	24	AN525-416R10	5-1	28
AN520-10-“X”	8-7	24	AN525-416R10	5-4	32
AN520-10R16	5-5	5	AN525-416R14	5-1	23A
AN520-10R16	5-6	13	AN525-416R6	5-3	13
AN525-10R10	3-2	–	AN525-416R6	5-4	13

UNCONTROLLED COPY WHEN DOWNLOADED OR PRINTED

Visit www.enstromhelicopter.com for instructions to order an original manual and to register for email notification of updates.

PART NUMBER INDEX

Part Number	Figure	Item
AN525-632R10	3-8	27
AN525-832R10	3-2	31
AN525-832R10	3-3	–
AN525-832R10	5-11	80
AN525-832R16	11-1	47
AN525-832R6	3-8	42
AN525-832R7	10-38	70
AN525-832R7	11-6	70
AN525-832R7	3-8	42
AN525-832R7	5-2	440
AN525-832R7	6-6	28
AN525-832R7	6-8	22
AN525-832R8	10-33	7
AN525-832R8	10-38	30
AN525-832R8	11-5	300
AN525-832R8	3-3	16
AN525-832R8	3-8	42
AN525-832R8	5-3	16
AN525-832R8	5-4	16
AN525-8R7	11-1	23
AN525-8R7	4-5	13
AN525-8R7	5-11	220
AN525-8R7	5-5	40
AN525-8R7	6-9	50
AN525-8R8	6-1.1	230
AN526-1032R6	3-6	220
AN526-1032R6	3-6	390
AN526-1032R6	3-6	950
AN526-1032R6	5-2	470
AN526-1032R8	3-6	160
AN526-1032R8	3-6	260
AN526-1032R8	3-6	450
AN526-1032R8	3-6	590
AN526-1032R8	3-6	640
AN526-1032R8	3-6	700
AN526-1032R8	3-6	740
AN526-1032R8	3-6	820
AN526-1032R8	3-6	870
AN526-1032R8	3-6	910
AN526-1032R8	3-6.1	170
AN526-632R	10-29	140
AN526-632R10	10-30	6
AN526-632R12	11-5	250
AN526-632R4	6-7.1	2
AN526-632R6	10-1	–
AN526-632R6	10-35	4
AN526-632R6	3-21	–
AN526-632R6	3-4	30
AN526-632R6	3-4	230
AN526-632R7	10-18	12
AN526-632R7	10-18	35
AN526-632R7	10-19	–
AN526-632R7	10-19	6
AN526-632R7	10-29	10
AN526-632R7	11-4	5
AN526-632R8	10-28	7
AN526-632R8	10-29	100
AN526-632R8	3-4	90
AN526-632R8	3-4	260
AN526-6R6	10-24.1	7
AN526-832R7	9-14	63
AN526-832R8	10-28	16
AN526-832R8	10-29	90
AN526-832R8	3-13	27
AN526-832R8	3-18	9
AN526-832R8	3-18	18
AN526-832R8	6-12	9
AN526-832R8	9-1	39
AN526-832R8	9-14	63
AN526-832R-8	9-9	9
AN526-8R8	9-14	63
AN526C-1032R9	3-4	190
AN530-4-6	11-5	190
AN530-6R6	10-1	15

UNCONTROLLED COPY WHEN DOWNLOADED OR PRINTED

Visit www.enstromhelicopter.com for instructions to order an original manual and to register for email notification of updates.

PART NUMBER INDEX

Part Number	Figure	Item
AN530-6R6	10-10	8
AN530-6R6	10-2	15
AN530-6R6	10-3	15
AN530-6R6	10-4	15
AN530-6R6	11-4	12
AN530-6R6	4-2	–
AN530-8R8	3-2	–
AN530-8R8	3-2	–
AN530-8R8	3-2	–
AN530-8R8	3-2	–
AN530-8R8	3-2	17
AN530-8R8	4-2	–
AN531-6R12	3-17	–
AN531-6R8	3-16	4
AN531-8R8	3-2	–
AN5-33A	7-6	3
AN5-33A	7-6	3
AN5-33A	7-6	3
AN5-33A	7-6.1	3
AN5-35A	4-1	7
AN5-35A	4-6	5
AN5-37A	4-1	26
AN5-37A	4-1	33
AN5-37A	6-13	6
AN5-43A	8-1	5
AN5-43A	8-2	5
AN5-44A	8-1	5
AN5-44A	8-2	5
AN5-4A	4-6	9
AN5-4A	7-8.1	33
AN5534-2	10-21	2
AN5546-1	7-8	38
AN5546-1	7-8.1	34
AN5816-2	10-33	16
AN5H-45A	8-1	2
AN5H-45A	8-2	2
AN5H-46A	8-1	2
AN5H-46A	8-2	2
AN5H-6A	8-1	1
AN5H-6A	8-2	1
AN6-20A	4-3	2
AN6227-11	7-11	8
AN6227-3	7-11	12
AN6227-6	7-8	–
AN6227-6	7-9	–
AN6-23A	4-2	19
AN654-832A	11-2	14
AN654-832A	11-2	30
AN690-10	3-14	–
AN742F10	6-4	4
AN742F8	6-4	3
AN743-13	11-2	2
AN743-13	5-5	21
AN743-13	5-6	27
AN75-A12	8-3	54
AN75-A6	8-3	53
AN7H-7A	8-7	33
AN814-2D	8-2	32
AN814-2DL	5-8	52
AN814-2DL	7-1	13
AN814-2DL	7-1.1	200
AN814-2DL	7-11	7
AN814-2DL	7-5	10
AN814-2DL	8-5	26
AN814-4DL	6-9	24
AN814-5DL	7-8	2
AN814-5DL	7-8.1	2
AN814-6DL	6-9	13
AN814-8DL	6-9	11
AN814-8DL	7-5	7
AN815-6J	6-4	24
AN816-4D	5-12	110
AN816-4D	5-9	11
AN816-6D	7-8	9

UNCONTROLLED COPY WHEN DOWNLOADED OR PRINTED

Visit www.enstromhelicopter.com for instructions to order an original manual and to register for email notification of updates.

PART NUMBER INDEX

Part Number	Figure	Item
AN816-6D	7-8.1	6
AN816-8D	11-2	8
AN816-8D	11-2	24
AN816-8J	11-2	7
AN816-8J	11-2	23
AN818-4D	10-33	–
AN818-4D	6-3	61
AN824-6J	6-3	12
AN824-6J	6-4	36
AN824-8D	11-1	10
AN824-8D	11-3	7
AN824-8D	5-5	2
AN824-8J	11-1	7
AN832-4D	6-3	50
AN833-4	6-1	38
AN833-6J	6-3	14
AN833-6J	6-4	33
AN900-10	7-9	24
AN900-6	7-8	1
AN900-6	7-8.1	1
AN900-8	7-11	10
AN924-4	6-1	40
AN924-4D	5-2	430
AN924-4D	6-3	51
AN924-6D	5-7	10
AN924-6J	6-3	16
AN924-6J	6-4	34
AN929-4D	10-33	21
AN929A4J	6-1	68
AN929A4S	6-3	64
AN931-10-20	10-13	30
AN931-3-5	10-1	–
AN931-3-5	10-2	–
AN931-3-5	10-3	–
AN931-3-5	10-4	41
AN931-3-5	6-9	5
AN931-3-9	6-1.1	270
AN931-4-12	7-7	7
AN931-4-7	5-8	–
AN931-5-12	3-2	–
AN931-5-12	3-2	–
AN931-5-12	3-2	–
AN931-8-13	7-7	7
AN931-8-20	7-7	6
AN932-3D	7-8	3
AN935-10	6-7.1	11
AN935-4	9-3	36
AN935-416L	7-8	21
AN935-416L	7-8.1	18
AN935-6	10-1	–
AN935-6	10-2	–
AN935-6	10-3	–
AN935-8	10-21	6
AN935-8	10-22	8
AN935-8	10-24	6
AN935-8	6-1	32
AN935-8	6-1	74
AN935-8	6-1	111
AN935B8	10-1	–
AN935B8	10-2	–
AN935B8	10-3	–
AN935B8	10-4	–
AN936-416	11-5	260
AN936A2	10-23	9
AN936A416	11-1	25
AN936-A416	4-5	15
AN936-A516	11-2	5
AN936-A516	11-2	21
AN936A716	6-6	2
AN936-B4	9-3	–
AN938-8	10-20	7
AN950-516L	4-3	9
AN960-10	10-12	5
AN960-10	10-12	11

UNCONTROLLED COPY WHEN DOWNLOADED OR PRINTED

Visit www.enstromhelicopter.com for instructions to order an original manual and to register for email notification of updates.

PART NUMBER INDEX

Part Number	Figure	Item	Part Number	Figure	Item
AN960-10	10-13	15	AN960-10	9-14	41A
AN960-10	10-13	22	AN960-10	9-14	46
AN960-10	10-16	16	AN960-10	9-3	17
AN960-10	10-17	3	AN960-10L	10-12	15
AN960-10	3-12	14	AN960-10L	10-12	19
AN960-10	3-6	170	AN960-10L	10-13	19
AN960-10	3-6	580	AN960-10L	10-13	26
AN960-10	3-6	730	AN960-10L	10-14	6
AN960-10	3-8	16	AN960-10L	10-16	12
AN960-10	4-6	13	AN960-10L	10-17	11
AN960-10	5-11	270	AN960-10L	10-17	25
AN960-10	5-12	40	AN960-10L	10-18	19
AN960-10	5-2	700	AN960-10L	10-18	25
AN960-10	5-2	760	AN960-10L	10-19	2
AN960-10	5-2	790	AN960-10L	10-27	15
AN960-10	5-2	820	AN960-10L	11-1	30
AN960-10	5-8	23	AN960-10L	3-11	4
AN960-10	5-8	55	AN960-10L	3-12	13
AN960-10	5-8	91	AN960-10L	3-15	8
AN960-10	5-9	3	AN960-10L	3-19	15
AN960-10	6-1	36	AN960-10L	3-8	8
AN960-10	6-1	85	AN960-10L	4-2	28
AN960-10	6-10	4	AN960-10L	4-4	19
AN960-10	6-10	4	AN960-10L	5-2	100
AN960-10	6-10	16	AN960-10L	5-2	140
AN960-10	6-14	4	AN960-10L	5-2	180
AN960-10	6-2	9	AN960-10L	5-2	240
AN960-10	6-7.1	12	AN960-10L	5-5	7
AN960-10	6-9	4	AN960-10L	5-6	15
AN960-10	7-10	13	AN960-10L	5-9	3
AN960-10	7-11	25	AN960-10L	6-10	14
AN960-10	7-4	19	AN960-10L	6-10	16
AN960-10	7-5	22	AN960-10L	6-10	20
AN960-10	7-8	36	AN960-10L	6-11	7
AN960-10	8-3	–	AN960-10L	6-11	25
AN960-10	8-3	30	AN960-10L	6-12	7
AN960-10	8-7	23	AN960-10L	6-12	27

UNCONTROLLED COPY WHEN DOWNLOADED OR PRINTED

Visit www.enstromhelicopter.com for instructions to order an original manual and to register for email notification of updates.

PART NUMBER INDEX

Part Number	Figure	Item	Part Number	Figure	Item
AN960-10L	6-6	10	AN960-416L	10-24.1	17
AN960-10L	6-7	13	AN960-416L	3-12	4
AN960-10L	6-7.1	5	AN960-416L	3-6	120
AN960-10L	6-9	4	AN960-416L	3-6.1	130
AN960-10L	7-11	27	AN960-416L	3-8	4
AN960-10L	7-3	18	AN960-416L	3-9	3
AN960-10L	7-9	5	AN960-416L	4-1	11
AN960-10L	8-3	31	AN960-416L	4-1	30
AN960-10L	8-7	23	AN960-416L	4-2	9
AN960-10L	9-1	8	AN960-416L	5-2	310
AN960-10L	9-10	8	AN960-416L	6-1	20
AN960-10L	9-12	37	AN960-416L	6-10	24
AN960-10L	9-14	26	AN960-416L	9-10	2
AN960-10L	9-14	41	AN960-416L	9-10	12
AN960-10L	9-15	5	AN960-416L	9-12	16
AN960-10L	9-2	43	AN960-416L	9-15	29
AN960-10L	9-2	53	AN960-416L	9-2	2
AN960-10L	9-4	31	AN960-416L	9-5	8
AN960-10L	9-6	36	AN960-416L	9-8	23
AN960-10L	9-7.1	29	AN960-4L	3-3	–
AN960-10L	9-8	2	AN960-4L	3-3	24
AN960-10L	9-9	6	AN960-4L	6-7.2	5
AN960-3	6-3	24	AN960-4L	7-8.2	70
AN960-416	3-8	4	AN960-4L	9-3	41
AN960-416	4-1	4	AN960-516	4-1	8
AN960-416	4-1	22	AN960-516	4-1	27
AN960-416	4-2	11	AN960-516	4-2	13
AN960-416	4-6	3	AN960-516	4-3	7
AN960-416	5-12	90	AN960-516	4-6	6
AN960-416	6-10	24	AN960-516	6-1	94
AN960-416	7-1	17	AN960-516	6-1	102
AN960-416	7-8	20	AN960-516	7-3	31
AN960-416	7-8.1	17	AN960-516	7-4	26
AN960-416	8-5	16	AN960-516	7-5	29
AN960-416	9-13	6	AN960-516	7-6	4
AN960-416	9-15	31	AN960-516	7-6	4
AN960-416L	10-18	28	AN960-516	7-6	4

UNCONTROLLED COPY WHEN DOWNLOADED OR PRINTED

Visit www.enstromhelicopter.com for instructions to order an original manual and to register for email notification of updates.

PART NUMBER INDEX

Part Number	Figure	Item	Part Number	Figure	Item
AN960-516	7-6.1	4	AN960-616L	4-3	5
AN960-516	8-1	6	AN960-616L	6-7.2	15
AN960-516	8-2	6	AN960-616L	9-12	21
AN960-516	9-13	21	AN960-6L	10-18	13
AN960-516L	4-2	18	AN960-6L	10-18	36
AN960-516L	4-4	23	AN960-6L	10-19	–
AN960-516L	4-6	10	AN960-6L	10-19	7
AN960-516L	5-8	13	AN960-6L	10-28	10
AN960-516L	6-1	92	AN960-6L	10-29	110
AN960-516L	6-1	94	AN960-6L	10-29	150
AN960-516L	7-2	12	AN960-6L	10-29	170
AN960-516L	7-3	31	AN960-6L	10-4	–
AN960-516L	7-4	26	AN960-6L	11-6	160
AN960-516L	7-5	29	AN960-6L	3-4	40
AN960-516L	8-1	6	AN960-6L	3-4	240
AN960-516L	8-2	6	AN960-716	5-2	420
AN960-516L	9-13	16	AN960-716	8-7	32
AN960-516L	9-15	20	AN960-716L	9-11	8
AN960-516L	9-5	24	AN960-8	10-20	6
AN960-6	10-1	–	AN960-8	10-33	8
AN960-6	10-1	–	AN960-8	11-1	38
AN960-6	10-2	–	AN960-8	11-2	13
AN960-6	10-3	–	AN960-8	11-2	29
AN960-6	11-4	6	AN960-8	5-12	270
AN960-6	4-4	12	AN960-8	5-12	320
AN960-616	3-1	220	AN960-8	5-8	15
AN960-616	3-1	320	AN960-8	6-1	75
AN960-616	3-1	350	AN960-8	6-1	110
AN960-616	3-1	370	AN960-8	6-2	9
AN960-616	3-1	400	AN960-8	6-3	31
AN960-616	4-1	14	AN960-8	6-4	17
AN960-616	4-3	3	AN960-816	5-9	8
AN960-616	7-6	21	AN960-816	6-1	39
AN960-616	7-6.1	20	AN960-816	8-6	6
AN960-616	7-7	3	AN9608L	6-7.2	10
AN960-616	9-12	26	AN960-8L	10-17	22
AN960-616L	4-2	20	AN960-8L	10-18	16

UNCONTROLLED COPY WHEN DOWNLOADED OR PRINTED

Visit www.enstromhelicopter.com for instructions to order an original manual and to register for email notification of updates.

PART NUMBER INDEX

Part Number	Figure	Item	Part Number	Figure	Item
AN960-8L	10-21	5	AN960-916	6-4	32
AN960-8L	10-22	7	AN960B8	10-1	–
AN960-8L	10-24	5	AN960B8	10-2	–
AN960-8L	10-30	3	AN960B8	10-3	–
AN960-8L	11-1	18	AN960B8	10-4	–
AN960-8L	11-5	280	AN960C10	10-16	3
AN960-8L	3-13	28	AN960C10	10-16	10
AN960-8L	3-2	–	AN960C10	6-13	9
AN960-8L	3-2	–	AN960C10	6-14	7
AN960-8L	3-2	–	AN960C10	6-6	25
AN960-8L	3-2	–	AN960C10	6-8	6
AN960-8L	3-2	–	AN960C10L	6-1	80
AN960-8L	3-2	–	AN960C10L	6-6	23
AN960-8L	3-3	17	AN960C10L	6-8	6
AN960-8L	5-10	4	AN960C1216	8-3	39
AN960-8L	5-11	210	AN960C416	7-10	16
AN960-8L	5-11	230	AN960C416L	10-17	6
AN960-8L	5-2	450	AN960C416L	10-17	16
AN960-8L	5-5	41	AN960C416L	10-18	–
AN960-8L	5-6	23	AN960C416L	6-8	20
AN960-8L	5-8	7	AN960C416L	7-10	16
AN960-8l	5-8	33	AN960C516	6-1	56
AN960-8L	5-8	74	AN960C516L	10-17	30
AN960-8L	6-1	33	AN960D10	10-18	3
AN960-8L	6-1.1	240	AN960D10	10-19	–
AN960-8L	6-12	10	AN960D10	10-23	6
AN960-8L	6-3	55	AN960D10	11-2	16
AN960-8L	6-4	6	AN960D10	11-2	31
AN960-8L	6-4	16	AN960D10	11-6	90
AN960-8L	6-9	51	AN960D10	6-8	18
AN960-8L	8-1	33	AN960D10	6-9	30
AN960-8L	8-2	38	AN960D10	8-7	23
AN960-8L	9-14	64	AN960D10	9-1	21
AN960-8L	9-3	10	AN960D10L	10-17	28
AN960-8L	9-3	31	AN960D10L	10-18	31
AN960-8L	9-9	10	AN960D10L	10-25	7
AN960-916	6-3	15	AN960D10L	10-26	8

UNCONTROLLED COPY WHEN DOWNLOADED OR PRINTED

Visit www.enstromhelicopter.com for instructions to order an original manual and to register for email notification of updates.

PART NUMBER INDEX

Part Number	Figure	Item	Part Number	Figure	Item
AN960D10L	11-6	100	AN960PD10	10-16	22
AN960D10L	3-2	–	AN960PD10	7-3	3
AN960D10L	3-2	–	AN960PD10L	3-6.1	210
AN960D10L	3-2	25	AN960PD10L	3-6.1	240
AN960D10L	3-21	–	AN960PD10L	3-8	22
AN960D10L	6-8	18	AN960PD416	7-3	10
AN960D10L	8-7	23	AN960PD416	7-6	17
AN960D10L	9-10	14	AN960PD416	7-6.1	16
AN960D10L	9-4	7	AN960PD8L	7-3	28
AN960D10L	9-4	21	AN964-6C	6-4	31
AN960D3L	10-28	14	AN970-3	5-2	230
AN960D3L	10-29	220	AN970-3	6-12	30
AN960D416	11-5	230	AN970-3	6-3	25
AN960D416	6-9	38	AN970-3	6-3	26
AN960D416	9-14	15	AN975-3	6-10	4
AN960D416	9-14	16	AN975-3	7-5	22
AN960D416	9-2	8	AN975-3	7-10	–
AN960D416L	11-5	220	AN975-3	7-10	–
AN960D416L	9-14	15	ANL100	App A	–
AN960D416L	9-2	4	ANL-100	10-16	6
AN960D516	8-1	3	ANL-100	10-17	15
AN960D516	8-2	3	ANL-100	App A	–
AN960D516	8-3	52	ANL150	App A	–
AN960D516L	8-1	3	ANL-150	10-17	15
AN960D516L	8-2	3	ANL-150	App A	–
AN960D516L	10-4	–	ANL35	App A	–
AN960D616	8-3	44	ANL-35	10-17	29
AN960D616	9-1	32	ANL-35	App A	–
AN960D616L	9-1	33	AP-1-3-50-051	10-1	24
AN960D8	3-2	23	AP-1-3-50-051	10-2	24
AN960D8	8-1	18	AP-1-3-50-051	10-7	1
AN960D8	8-2	18	AP-1-3-50-051	10-8	1
AN960D8	8-3	36	AP-1-3-50-051	10-9	1
AN960D8L	10-28	10	AP22-6	8-6	3
AN960D8L	10-33	8	AS3084-08	6-1	12
AN960D8L	3-3	17	AS3209-113	6-1	54
AN960KD10L	9-4	21	AS3209-113	6-1	54

UNCONTROLLED COPY WHEN DOWNLOADED OR PRINTED

Visit www.enstromhelicopter.com for instructions to order an original manual and to register for email notification of updates.

PART NUMBER INDEX

Part Number	Figure	Item
AS3209-113	6-1	54
AS3491-01	6-1	18
AS3492-01	6-1	55
AV-22	10-38	120
AV-22	10-39	110
B-00396-1	10-18	6
B1000-050-S	9-9	17
B1210	App A	–
B-1210	8-7	5
B-1210	App A	–
B-1GF2-B	5-9	5
B46-2 1/2	9-3	11
BPF 15/16	10-12	22
BPF 15/16	10-13	32
BPF 15/16	10-15	–
BPF-1/2	3-8	14
BPF-3/4	4-5	22
BPF-3/4	9-7	19
C0455-039-0500M	9-6	20
C0480-035-0750-M	3-17	28
C0480-035-0750-M	3-17	34
C0480-045-0880-S	3-18	6
C0480-045-0880-S	3-18	15
C0600-063-1250	3-17	22
C102780	3-16	15
C102780	3-18	25
C145712	6-7	17
C145712	6-7	18
C148740	7-4	22
C148740	7-5	25
C23-805	10-4	29
C23-805	10-4	29
C23-806	10-4	30
C23-806	10-4	30
C23-807	10-4	31
C23-807	10-4	31
C307PS	10-4	–
CA3106F10-6S	10-1	–
CA3106F10-6S	10-2	–
CA3106F10-6S	10-3	–
CA3106F12S3SF80	5-12	200
CA3106F14S-5SF80	10-1	–
CA3106F14S-5SF80	10-1	–
CA3106F14S-5SF80	10-2	–
CA3106F14S-5SF80	10-2	–
CA3106F14S-5SF80	10-2	–
CA3106F14S-5SF80	10-3	–
CA3106F14S-5SF80	10-3	–
CA3106F14S-5SF80	10-3	–
CA3106F14S-5SF80	10-3	–
CA3106F20-29SF80	10-18	–
CBR1M-M	10-24.1	–
CBR1M-M	10-24.2	–
CBR1M-M	10-36	–
CBR1M-M	10-39	50
CBR2M-M	10-24.1	–
CBR2M-M	10-24.2	–
CBR2M-M	10-36	–
CBR3I-M	10-24.1	–
CBR3I-M	10-24.2	–
CBR3I-M	10-36	–
CBR3S-M	10-24.1	–
CBR3S-M	10-24.2	–
CBR3S-M	10-36	–
CC-3251	3-3	11
CCH25-S10-C	10-38	60
CCR-264 SS-3-3	App A	–
CCR264-3-03	3-2	–
CCR264-3-03	3-2	–
CCR264-3-3	App A	–
CCR264SS-3-02	5-2	490
CCR264SS-3-02	5-2	530
CCR-264-SS-3-2	4-5	–
CCR-264-SS-3-2	4-5	–

UNCONTROLLED COPY WHEN DOWNLOADED OR PRINTED

Visit www.enstromhelicopter.com for instructions to order an original manual and to register for email notification of updates.

PART NUMBER INDEX

Part Number	Figure	Item
CCR264SS-3-3	3-8	41
CCR264SS-3-3	5-8	25
CCR264SS-3-3	5-8	57
CCR264SS-3-3	5-8	93
CCR-264-SS-3-3	3-2	–
CCR-264-SS-3-3	3-2	–
CCR-264-SS-3-3	3-2	–
CCR-264-SS-3-3	3-2	–
CCR-264-SS-3-3	3-2	19
CCR-264-SS-3-3	3-2	27
CCR274SS-3-02	3-20	–
CCS38-S8-C0	10-4	34
CL42498	7-1	25
CP25WB+	5-11	180
CP25WB+	6-4	30
CP8-TB	10-24.1	11
CP8-TB	10-24.2	8
CP8-TB	5-2	360
CR 17240	8-3	16
CR 17240	App A	–
CR20526	App A	–
CR2-M	10-24.1	–
CR2-M	10-24.2	10
CR2-M	10-25	4
CR2-M	10-26	4
CR2-M	10-36	13
CR2-M	10-39	60
CR3212-4-02	5-2	540
CR3212-4-02	9-6	6
CR3212-4-02	9-7	6
CR3212-4-02	App A	–
CR3212-4-03	4-4	21
CR3212-4-03	5-2	500
CR3212-4-03	5-2	510
CR3212-4-03	5-2	550
CR3212-4-2	App A	–
CR3212-4-4	3-6.2	–
CR3213-4-02	10-19	–
CR3213-4-02	3-11	6
CR3213-4-02	5-5	22
CR3213-4-02	5-6	28
CR3213-4-02	6-3	–
CR3213-4-02	9-4	15
CR3213-4-02	App A	–
CR3213-4-03	3-10	18
CR3213-4-03	4-4	21
CR3213-4-03	6-3	–
CR3213-4-03	9-14	73
CR3213-4-2	App A	–
CR3213-4-4	3-6.2	10
CR3213-5-02	9-4	17
CR3213-5-03	5-2	720
CR3213-5-03	9-1	29
CR3213-5-04	9-4	–
CR3213-6-03	App A	–
CR3213-6-3	4-2	26
CR3213-6-3	App A	–
CR3214-4-02	5-3	–
CR3214-4-02	5-4	–
CR3523-6-05	9-1	7
CR3523-6-5	9-1	7
CR3523-6-5	9-1	7
CR3523-6-5	9-1	7
CR91484-4-( )	3-3	20
CRWI14809	7-1	2
CRWI14809	App A	–
CTJ122E25E	10-36	8
D110277	10-1	37
D110278	10-1	34
D1250	4-4	3
DE110963-1	10-1	35
DEU-9P	10-1	33
DEU-9S	10-1	36
DT-370-MOMF-5	7-9	26

UNCONTROLLED COPY WHEN DOWNLOADED OR PRINTED

Visit www.enstromhelicopter.com for instructions to order an original manual and to register for email notification of updates.

PART NUMBER INDEX

Part Number	Figure	Item	Part Number	Figure	Item
DU08	App A	–	ECD092-3	8-2	40
DU-08	App A	–	ECD093-11	11-5	100
E9000-10	6-1	14	ECD093-11	5-11	280
E9002-1	11-1	11	ECD093-11	5-8	–
E9002-2	11-1	12	ECD111-11	7-9	–
EA9309NA	3-10	–	ECD4000-11	7-3	33
EA9309NA	5-2	400	ECD4011-13	6-10	6
EA9359	5-11	300	ECD4014-11	7-1	5
EA9394	5-2	850	ECD4014-11	7-1.1	13
EC-776	5-2	840	ECD4015-11	7-1	23
ECD001-11	8-7	13	ECD4016-11	7-1	29
ECD001-13	8-7	13	ECD4017-11	7-2	7
ECD001-15	8-7	13	ECD4017-11	7-2	7
ECD002-13	8-7	15	ECD4019-1	3-14	–
ECD009-11	9-11	3	ECD4019-3	3-14	–
ECD013-11	9-12	8	ECD4019-5	3-14	–
ECD014-11	7-6	9	ECD4020-11	9-8	28
ECD014-11	7-6.1	8	ECD4024-1	7-4	24
ECD015-11	7-10	7	ECD4024-1	7-5	27
ECD016-11	9-15	9	ECD4025-1	7-10	14
ECD030-11	9-12	–	ECD4031-11	9-3	23
ECD030-11	9-15	–	ECD4031-13	9-3	23
ECD034-11	9-3	13	ECD4032-3	3-5	10
ECD050-11	3-12	8	ECD4032-7	3-6.2	70
ECD050-11	9-15	34	ECD4034-1	6-9	45
ECD050-11	9-15	36	ECD4034-3	6-9	44
ECD050-19	9-13	19	ECD4034-5	6-9	46
ECD066-1	9-3	3	ECD4034-7	6-9	43
ECD075-13	10-16	1	ECD4034-9	6-9	47
ECD075-13	10-18	9	ECD4035-1	10-1	11
ECD075-15	10-16	1	ECD4035-1	10-2	11
ECD075-15	10-18	9	ECD4035-1	10-3	11
ECD084-1	8-3	25	ECD4035-5	10-4	11
ECD091-1	8-5	20	ECD4036-150	5-3	5
ECD092-1	8-1	23	ECD4036-150	5-4	5
ECD092-1	8-1	36	ECD4037-11	5-1	13
ECD092-1	8-2	27	ECD4037-11	5-4	22

UNCONTROLLED COPY WHEN DOWNLOADED OR PRINTED

Visit www.enstromhelicopter.com for instructions to order an original manual and to register for email notification of updates.

PART NUMBER INDEX

Part Number	Figure	Item	Part Number	Figure	Item
ECD4037-3	5-4	23	ECD4050-1	10-3	2
ECD4038-3	10-2	9	ECD4050-1	10-4	2
ECD4038-3	10-3	9	ECD4052-4	10-3	8
ECD4038-4	10-2	9	ECD4052-5	10-3	8
ECD4038-4	10-3	9	ECD4053-1	10-1	1
ECD4038-5	10-4	9	ECD4053-1	10-2	1
ECD4039-1	10-25	6	ECD4053-3	10-2	1
ECD4039-1	10-26	7	ECD4053-4	10-2	1
ECD4039-3	10-25	6	ECD4053-5	10-2	1
ECD4039-3	10-26	12	ECD4053-5	10-3	1
ECD4040-1	10-1	10	ECD4053-6	10-3	1
ECD4040-1	10-2	10	ECD4053-6	10-4	1
ECD4040-1	10-3	10	ECD4053-7	10-3	1
ECD4040-5	10-4	10	ECD4053-7	10-4	1
ECD4041-1	10-1	12	ECD4054-3	10-2	8
ECD4041-1	10-2	12	ECD4054-3	10-3	8
ECD4041-7	10-3	12	ECD4056-1	7-4	5
ECD4041-7	10-4	12	ECD4056-1	7-5	5
ECD4041-9	10-4	12	ECD4056-3	7-4	5
ECD4042-1	10-1	6	ECD4056-3	7-5	5
ECD4042-1	10-2	6	ECD4056-5	7-4	5
ECD4042-1	10-3	6	ECD4056-5	7-5	5
ECD4042-7	10-4	6	ECD4057-11	4-2	25
ECD4043-1	10-1	8	ECD4057-13	4-2	25
ECD4043-1	10-2	8	ECD4057-15	4-2	25
ECD4043-4	10-2	8	ECD4059-3	10-1	20
ECD4043-4	10-3	8	ECD4059-3	10-2	20
ECD4043-5	10-3	8	ECD4059-3	10-3	20
ECD4043-7	10-4	8	ECD4059-5	10-3	20
ECD4044-1	10-1	7	ECD4059-5	10-4	20
ECD4044-1	10-2	7	ECD4060-11	9-7.1	18
ECD4044-4	10-3	7	ECD4060-11	9-7.2	18
ECD4044-5	10-4	7	ECD4060-15	9-7.1	18
ECD4046-1	5-7	9	ECD4061-1	3-16	10
ECD4049-11	5-1	3	ECD4064-13	6-3	29
ECD4049-13	5-1	11	ECD4066-1	6-3	7
ECD4050-1	10-2	2	ECD4066-2	6-3	8

UNCONTROLLED COPY WHEN DOWNLOADED OR PRINTED

Visit www.enstromhelicopter.com for instructions to order an original manual and to register for email notification of updates.

PART NUMBER INDEX

Part Number	Figure	Item
ECD4066-3	6-3	7
ECD4066-4	6-3	8
ECD4069-1	7-9	1
ECD4072-1	10-18	23
ECD4074-1	6-9	1
ECD4074-5	6-9	1
ECD4078-1	10-4	20
ECD4078-X	10-4	20
ECD4079-1	10-18	38
ECD4079-1	10-23.1	10
ECD4080-11	6-1	91
ECD4089-11	10-35	–
ECD4089-11	3-21	230
ECD4089-15	10-35	–
ECD4089-15	3-21	260
ECD4089-23	3-18	–
ECD4089-23	3-18	–
ECD4092-1	5-1	29
ECD4093-1	10-4	27
ECD4094-1	6-6	1
ELP30-28-03	11-6	220
ELP30-2803-281	11-6	220
ELR07-2800WB-2	11-6	200
ELR17-2800WB-2	11-6	200
ES49026-8	11-1	4
F12NE4717-054	9-15	21
F12NE-4753-02	9-14	28
F12-NE-4753-048	9-13	7
F12-NE-4753-054	9-13	17
F12NE-4753-080	8-6	8
F22NA1-02	10-12	2
F22NA1-02	10-13	11
F22NA1-62	10-28	2
F22NA17A-02	11-2	18
F22NKM62	3-4	50
FIT-221V-1/8	6-9	58
FIT-221V-3/32	10-36	–
FLX200120003208	6-1	104
FN22M-624	7-7	4
FN22M-624	8-6	4
FN22M-624	App A	–
FN-22M-624	App A	–
G06DU	9-9	16
G08DU	6-6	6
G08DU	App A	–
G2-0032	9-1	36
G-641	10-14	1
GA4-250	3-2	–
GA4-250	3-2	–
GA4-250	3-2	–
GA4-250	3-2	–
GA4-250	3-2	–
GA4-250	3-2	–
GA4-250	6-11	22
GA4-250	6-12	24
GB-910	9-13	2
GCSG 501-2	App A	–
GCSG501-2	10-18	1
GCSG501-2	App A	–
GEE62FR-C	10-19	–
GF-5500-88	5-3	21
GF-5500-88	5-4	27
Harper 1/4	3-6.1	100
HD6158510090030	App A	–
HD6158-510-090-030	10-10	4
HD6158-510-090-030	App A	–
HFLVV3M	6-8	9
HFLVV3M	7-3	15
HFLVV3M	App A	–
HFLVV-3M	App A	–
HFVV3M	3-6	270
HFVV3M	3-6	560
HFVV3M	3-6	710
HFVV3M	7-3	13

UNCONTROLLED COPY WHEN DOWNLOADED OR PRINTED

Visit www.enstromhelicopter.com for instructions to order an original manual and to register for email notification of updates.

PART NUMBER INDEX

Part Number	Figure	Item
HFVV3M	App A	–
HFVV-3M	App A	–
HGVV3M	App A	–
HGVV-3M	App A	–
HL18PB5-2	9-8	34
HL18PB5-3	9-5	12
HL18PB70-5-5	3-8	2
HL70-5	9-5	13
HL70-5	9-8	35
HM3M	6-7	1
HM3M	6-7	10
HM3M	App A	–
HM-3M	App A	–
HML3M	6-7	5
HML3M	6-7	6
HML3M	App A	–
HML-3M	App A	–
HMLVV3M	6-6	16
HMLVV3M	6-7	5
HMLVV3M	6-7	6
HMLVV3M	App A	–
HMLVV-3M	App A	–
HMLVV4M	9-14	7
HMLVV4M	9-14	12
HMLVV4M	9-2	22
HMLVV4M	9-5	4
HMLVV4M	9-5	20
HMLVV4M	App A	–
HMLVV-4M	App A	–
HMLVV5M	9-5	–
HMLVV5M	App A	–
HMLVV-5M	App A	–
HMVV3M	6-6	5
HMVV3M	6-6	18
HMVV3M	6-7	1
HMVV3M	6-7	10
HMVV3M	6-8	4
HMVV3M	App A	–
HMVV-3M	App A	–
HMVV4M	6-8	17
HMVV4M	9-14	4
HMVV4M	9-14	9
HMVV4M	9-2	20
HMVV4M	9-5	2
HMVV4M	9-5	18
HMVV4M	App A	–
HMVV-4M	App A	–
HMVV5M	9-5	–
HMVV5M	App A	–
HMVV-5M	App A	–
HP-1003	7-9	23
HPF1260-6-58	8-6	1
HS-99417	3-6	530
HS-99417	3-6	650
HS-99417	3-6	780
HV79-13	5-8	12
ILT1.5IM	10-36	11
ILT1M-M	10-36	10
ILT2S-M	10-24.1	–
ILT2S-M	10-24.2	–
ILT2S-M	10-36	12
IPT-20RT1-1000	App A	–
IPT-20RT1-1000-150G	10-20	2
IPT-20RT1-1000-150G	App A	–
J-3459-8	9-3	7
JC-D4N-300L	6-7.1	7
JC-D4N-300L	6-7.3	10
J-D4N-300M	10-16	–
JE-1	10-23	8
JE-1	6-1	88
K010-0406	7-8	39
K010-0406	7-8.1	35
K010406	6-9	9
K10712	7-9	–

UNCONTROLLED COPY WHEN DOWNLOADED OR PRINTED

Visit www.enstromhelicopter.com for instructions to order an original manual and to register for email notification of updates.

PART NUMBER INDEX

Part Number	Figure	Item
K1AN	App A	–
K1A-N	11-5	40
K1A-N	6-5	14
K203RA	7-9	25
K94RA	7-11	11
KA1-N	App A	–
KN500B1/8	10-1	30
KN500B1/8	10-2	30
KN500B1/8	10-7	11
KN500B1/8	10-8	11
KN500B1/8	10-9	12
KN500B1/8	10-9	12
KN500B1/8	App A	–
KN500B-1/8	App A	–
KN700B1/4	11-6	210
KUP-5D55-24	10-18	33
KXD-X9N	10-18	15
L-14X	8-4	–
L-18X	8-3	6
L58D-G24-W	10-4	25
L58D-Y24-W	10-3	23
L58D-Y24-W	10-4	25
L-7X	8-4	–
LCB	10-24.1	–
LCB	10-36	–
LDF-5-157	9-2	61
LDF-5-157	9-5	28
LED-41-11-HE-39062	10-4	19
LHMS-S5-D	10-27	17
LHMS-S5-D	10-36	16
LHSSE-5	9-12	–
LR3-40-17-HE-81041	10-4	18
LR3-40-17-HE-81042	10-4	17
LR3-40-17-HE-81043	10-4	16
LW12878-4S-260	5-5	29
LW12878-4S-260	5-6	35
LWB-22-6-58	8-6	1
M1270	7-5	8
M12883/41-14	10-16	–
M25988/1-906	7-1	12
M25988/1-906	7-1.1	170
M39029/22-192	10-1	–
M39029/22-192	10-2	–
M39029/22-192	10-3	–
M39029/22-192	10-4	–
M39029/22-192	10-4	–
M39029/22-192	10-4	–
M39029/22-192	10-4	–
M39029/89-498	10-26	–
M39029/89-501	10-26	–
M39029/92-536	6-7.3	30
M45913/2-4CG5C	3-5	20
M45913/2-4CG5C	3-6.2	50
M5594/1-3	10-1	25
M81934/1-08C012	9-12	30
M83248/1-008	7-11	12
M83248/1-011	7-8	–
M83248/1-011	7-9	–
M83248/1032	App A	–
M83248/1-032	8-2	45
M83248/1-032	App A	–
M83248/1-138	6-9	36
M83248/1-911	7-8	16
M83248/1-911	7-8.1	13
M83536/10-024M	10-16	–
M83536/2-024L	10-18	33
M83536/33-003L	10-18	34
MAC-VR	10-18	11
MB542DD	9-1	3
MB542DD	9-1	3
MB542DD	9-1	3
MCI-06-01	3-17	32
MM-46-70	7-9	–
MOBIL 1 75-90	App A	–

UNCONTROLLED COPY WHEN DOWNLOADED OR PRINTED

Visit www.enstromhelicopter.com for instructions to order an original manual and to register for email notification of updates.

PART NUMBER INDEX

Part Number	Figure	Item
MOBIL 1 75W-90	App A	–
MOBIL 1 LS 75W-90	App A	–
MS1042-08	6-4	7
MS1083N08	7-3	29
MS14101-6	9-1	12
MS14103-4	9-12	–
MS14104-6	9-1	12
MS15001-1	8-1	28
MS16555-27	8-3	17
MS16562-196	6-7.2	14
MS16562-211	9-3	–
MS16562-213	9-3	40
MS16562-215	8-4	2
MS16562-218	3-19	5
MS16562-222	5-8	50
MS16562-232	5-8	44
MS16562-232	5-8	85
MS16998-10L	9-4	–
MS16998-46	3-8	13
MS171527	3-17	20
MS171531	3-17	18
MS171531	3-17	35
MS171535	3-17	5
MS17825-4	9-13	7
MS17825-4	9-15	32
MS17825-5	9-13	17
MS17826-3	6-6	11
MS17826-3	6-7	14
MS17826-3	6-7	19
MS17826-3	6-8	7
MS17826-3	9-6	37
MS17826-3	9-7.1	30
MS17826-4	6-8	21
MS17826-4	9-10	5
MS17826-4	9-14	17
MS17826-4	9-2	5
MS17826-4	9-5	9
MS17826-4	9-8	24
MS17826-5	9-5	25
MS17826-6	9-1	34
MS17987C409	9-14	59
MS18066-25	3-6	90
MS18066-69	6-7	21
MS18066-69	6-7.2	18
MS18066-8	3-6	300
MS20002C4	7-3	10
MS20002C4	App A	–
MS20002-C4	App A	–
MS20002C6	3-1	120
MS20002C6	3-1	200
MS20002-C6	3-7	3
MS20073-0304	App A	–
MS20073-03-04	App A	–
MS20074-03-04	9-10	15
MS20074-05-06	8-3	53
MS20074-05-12	8-3	54
MS20074-05-16	8-3	51
MS20074-05-17	8-3	50
MS20074-05-23	8-3	48
MS20253-P2	3-13	–
MS20253-P2	3-13	–
MS20253-P2	3-13	–
MS20253-P2	3-13	–
MS20253-P2	3-2	32
MS20364-1032A	9-9	7
MS20364-428	3-16	17
MS20392-1C11	6-7.2	4
MS20392-1C9	6-7.2	4
MS20392-2C17	3-6.1	80
MS20392-2C31	6-1	84
MS20426A3-3	6-3	–
MS20426A3-3	6-3	–
MS20426A3-3	6-3	–
MS20426A3-3	6-3	–

UNCONTROLLED COPY WHEN DOWNLOADED OR PRINTED

Visit www.enstromhelicopter.com for instructions to order an original manual and to register for email notification of updates.

PART NUMBER INDEX

Part Number	Figure	Item
MS20426A3-3	6-3	–
MS20426A3-3	6-11	14
MS20426A3-3	6-12	15
MS20426A3-4	3-13	–
MS20426A3-4	3-13	–
MS20426A3-4	3-13	–
MS20426A3-5	10-29	240
MS20426A5-4	3-19	3
MS20426AD3-2	6-9	28
MS20426AD3-3	10-12	3
MS20426AD3-3	10-12	8
MS20426AD3-3	10-13	3
MS20426AD3-3	10-18	–
MS20426AD3-3	10-18	5
MS20426AD3-3	10-28	3
MS20426AD3-3	11-2	19
MS20426AD3-3	3-13	25
MS20426AD3-3	3-2	–
MS20426AD3-3	3-2	–
MS20426AD3-3	3-2	–
MS20426AD3-3	3-2	–
MS20426AD3-3	5-8	3
MS20426AD3-3	5-8	29
MS20426AD3-3	5-8	70
MS20426AD3-3	6-12	–
MS20426AD3-3	6-2	6
MS20426AD3-3.5	6-12	–
MS20426AD3-4	10-28	3
MS20426AD3-4	10-29	70
MS20426AD3-4	10-29	250
MS20426AD3-4	11-5	150
MS20426AD3-4	3-19	8
MS20426AD3-4	3-2	–
MS20426AD3-4	3-2	–
MS20426AD3-4	3-2	–
MS20426AD3-4	3-2	–
MS20426AD3-4	3-2	–

Part Number	Figure	Item
MS20426AD3-4	3-2	–
MS20426AD3-4	3-8	24
MS20426AD3-5	3-8	18
MS20426AD3-5	3-9	14
MS20426AD3-5	6-11	19
MS20426AD3-5	6-12	21
MS20426AD3-5	9-14	32
MS20426AD3-6	10-28	4
MS20426AD3-6	3-13	34
MS20426AD3-7	3-13	32
MS20426AD4-4	11-4	17
MS20426AD4-4	3-2	–
MS20426AD4-4	3-2	–
MS20426AD4-8	3-6.2	40
MS20427M3-3E	6-1.1	–
MS20427M3-3E	6-1.1	–
MS20427M3-3E	6-1.1	–
MS20427M3-3E	6-1.1	–
MS20427M3-3E	6-1.1	–
MS20470A3-3	3-2	–
MS20470A3-3	6-1.1	120
MS20470A3-3	6-1.1	320
MS20470A3-4	10-29	190
MS20470A3-4	3-2	–
MS20470A3-4	3-2	–
MS20470A3-4	6-2	6
MS20470AD3-3	3-13	–
MS20470AD3-3	3-13	–
MS20470AD3-3	3-13	17
MS20470AD4-3	11-2	3
MS20470AD4-3	3-19	12
MS20470AD4-3	3-2	–
MS20470AD4-3	3-5	40
MS20470AD4-4	11-2	3
MS20470AD4-4	3-2	–
MS20470AD4-4	3-2	–
MS20470AD4-4	3-2	–

UNCONTROLLED COPY WHEN DOWNLOADED OR PRINTED

Visit www.enstromhelicopter.com for instructions to order an original manual and to register for email notification of updates.

PART NUMBER INDEX

Part Number	Figure	Item
MS20470AD4-4	3-6.1	340
MS20470AD4-4	5-2	600
MS20470AD4-6	3-19	6
MS20470AD5-4	9-14	66
MS20470AD5-7	3-8	2
MS20500-428	3-12	9
MS20500-524	6-1	57
MS20500-524	6-1	95
MS20604AD4W( )	3-3	20
MS20615-3M4	10-28	13
MS20615-3M4	10-29	210
MS20813-1	4-4	–
MS20819-4D	10-33	–
MS20819-4D	6-3	62
MS20822-4D	5-8	9
MS20822-4D	6-3	57
MS20822-4D	7-9	28
MS20822-4J	7-9	11
MS20822-6D	7-8	10
MS20822-6D	7-8.1	7
MS20823-4D	5-8	51
MS20823-4D	5-8	89
MS20913-1	5-12	210
MS20995C20	5-8	–
MS20995C25	5-1	–
MS20995C25	5-1	–
MS20995C25	5-12	170
MS20995C25	9-12	–
MS20995C25	9-2	–
MS20995-C25	6-7.1	6
MS20995-C25	7-1.1	–
MS20995C32	11-2	–
MS20995C32	11-2	–
MS20995C32	3-1	100
MS20995C32	3-1	180
MS20995C32	3-7	11
MS20995C32	5-7	–
MS20995C32	6-9	57
MS20995C32	7-10	–
MS20995C32	7-8	–
MS20995C32	7-8.1	–
MS20995C32	7-9	–
MS20995-C32	App A	–
MS20995C41	7-6	–
MS20995C41	7-6.1	–
MS20995C41	7-10	–
MS21042-08	10-24.1	5
MS21042-08	3-3	18
MS21042-08	5-12	260
MS21042-08	5-12	310
MS21042-08	5-5	18
MS21042-08	5-5	51
MS21042-08	6-1	82
MS21042-08	6-1	109
MS21042-08	6-3	32
MS21042-3	10-22	15
MS21042-3	11-1	31
MS21042-3	3-14	–
MS21042-3	3-6.1	220
MS21042-3	3-6.1	250
MS21042-3	6-1	35
MS21042-3	6-1.1	440
MS21042-3	6-13	10
MS21042-3	6-14	5
MS21042-3	6-3	27
MS21042-3	9-1	22
MS21042-3	9-10	9
MS21042-3	9-2	44
MS21042-3	9-2	54
MS21042-3	9-4	9
MS21042-3	9-4	22
MS21042-3	9-8	4
MS21042-4	10-24.1	18
MS21042-4	3-12	5

UNCONTROLLED COPY WHEN DOWNLOADED OR PRINTED

Visit www.enstromhelicopter.com for instructions to order an original manual and to register for email notification of updates.

PART NUMBER INDEX

Part Number	Figure	Item	Part Number	Figure	Item
MS21042-4	7-1	18	MS21080-06	3-8	23
MS21042-4	9-8	11	MS21080-08	11-2	18
MS21042-6	3-1	230	MS21080-08K	3-2	–
MS21042-6	3-1	380	MS21080-08K	3-2	–
MS21042-6	4-1	18	MS21080-3	10-13	12
MS21043-3	7-1.1	120	MS21080-3	3-9	13
MS21043-4	10-18	–	MS21081-3	3-8	17
MS21043-4	6-1	19	MS21083N3	3-12	15
MS21044N06	10-4	–	MS21083N3	3-17	12
MS21044N08	9-14	62	MS21083N3	3-18	47
MS21044N3	3-10	9	MS21083N3	6-1	79
MS21044N3	3-9	11	MS21083N3	7-9	6
MS21044N3	4-6	14	MS21083N3	8-3	–
MS21044N3	5-12	50	MS21083N5	7-5	31
MS21044N3	6-10	12	MS21083N4	3-10	13
MS21044N3	7-3	22	MS21083N4	3-18	26
MS21044N4	3-9	4	MS21083N6	3-17	24
MS21044N4	4-2	10	MS21083N6	4-2	21
MS21044N5	4-2	14	MS21240-08C12	9-12	30
MS21044N5	4-3	8	MS21240-08C12	App A	–
MS21044N5	7-4	28	MS21240-08C-12	App A	–
MS21044N5	7-5	31	MS21250-06-048	7-7	1
MS21044N5	7-6	5	MS21251-B3L	9-14	33
MS21044N5	7-6	5	MS21251-B3S	9-14	33
MS21044N5	7-6	5	MS21255-3LS	9-14	35
MS21044N5	7-6.1	5	MS21255-3RS	9-14	34
MS21044N5	8-1	16	MS21256-1	9-14	36
MS21044N5	8-2	16	MS21256-2	9-14	36
MS21044N6	4-3	4	MS21299C6	8-6	2
MS21044N6	7-6	22	MS21428-42	9-1	3
MS21044N6	7-6.1	21	MS21428-42	9-1	3
MS21059-08	5-8	69	MS21428-44	9-4	12
MS21061L3	6-3	44	MS21571-2S	10-17	17
MS21075L4	9-14	31	MS21919F14	5-9	13
MS21078-06	3-8	23	MS21919F4	5-11	120
MS21078-3	3-13	24	MS21919WCJ12	5-5	54
MS21078-3	3-2	–	MS21919WCJ14	10-22	4

UNCONTROLLED COPY WHEN DOWNLOADED OR PRINTED

Visit www.enstromhelicopter.com for instructions to order an original manual and to register for email notification of updates.

PART NUMBER INDEX

Part Number	Figure	Item
MS21919WCJ14	5-5	14
MS21919WCJ14	6-3	53
MS21919WCJ16	10-22	5
MS21919WCJ16	5-5	15
MS21919WCJ18	5-5	20
MS21919WCJ4	5-11	120
MS21919WCJ4	6-3	52
MS21919WCJ8	5-5	26
MS21919WCJ8	5-5	47
MS21919WCJ8	9-2	46
MS21919WCJ8	9-2	56
MS21919WDF14	5-6	14
MS21919WDG14	6-4	27
MS21919WDG16	6-4	26
MS21919WDG3	6-4	20
MS21919WDG3	7-1.1	90
MS21919WDG6	6-4	28
MS21919WF10	5-5	30
MS21919WF10	5-6	36
MS21919WF12	10-22	10
MS21919WF12	10-24.1	2
MS21919WF12	11-1	15
MS21919WF-12	5-12	230
MS21919WF14	10-22	10
MS21919WF14	10-24	2
MS21919WF14	5-6	20
MS21919WF14	6-9	49
MS21919WF16	10-20	4
MS21919WF16	10-22	10
MS21919WF16	10-24	8
MS21919WF16	10-24.1	3
MS21919WF16	11-1	16
MS21919WF16	5-5	15
MS21919WF16	5-6	21
MS21919WF16	6-1	27
MS21919WF-16	5-12	280
MS21919WF18	5-6	26
MS21919WF18	6-9	48
MS21919WF-18	5-12	290
MS21919WF4	11-1	28
MS21919WF4	5-10	6
MS21919WF4	5-5	39
MS21919WF4	5-6	32
MS21919WF8	10-20	3
MS21919WF8	10-22	10
MS21919WF8	10-24	3
MS21919WF8	10-24.1	14
MS21919WF8	11-1	22
MS21919WF8	9-2	46
MS21919WF8	9-2	56
MS21919WFA	11-5	310
MS2191WCJ8	6-1	106
MS24523-21	10-1	26
MS24524-31	10-9	1
MS24524-31	10-9	1
MS24525-31	10-1	21
MS24525-31	10-2	21
MS24525-31	10-3	21
MS24525-31	10-4	21
MS24566-2B	9-14	39
MS24665-1010	6-7.2	6
MS24665-1013	6-3	65
MS24665-1013	9-13	8
MS24665-1013	9-15	33
MS24665-105	6-8	8
MS24665-151	10-33	4
MS24665-151	11-5	200
MS24665-151	3-2	–
MS24665-151	5-9	7
MS24665-151	6-1	86
MS24665-151	9-13	27
MS24665-151	9-15	22
MS24665-151	9-8	25
MS24665-153	5-9	7

UNCONTROLLED COPY WHEN DOWNLOADED OR PRINTED

Visit www.enstromhelicopter.com for instructions to order an original manual and to register for email notification of updates.

PART NUMBER INDEX

Part Number	Figure	Item
MS24665-153	6-6	12
MS24665-153	6-7	15
MS24665-153	6-7	20
MS24665-153	9-11	10
MS24665-153	9-2	6
MS24665-153	9-5	10
MS24665-153	9-6	38
MS24665-153	9-7.1	31
MS24665-302	5-8	61
MS24665-323	9-14	54
MS24665-357	9-14	67
MS24665-389	9-14	67
MS24665-88	6-8	8
MS24677-49	8-3	53
MS24677-52	8-3	49
MS24677-52	8-3	54
MS246935287FLTH	8-3	–
MS24693BB52	App A	–
MS24693-BB52	10-1	–
MS24693-BB52	10-1	–
MS24693-BB52	10-1	–
MS24693-BB52	10-1	–
MS24693-BB52	10-1	–
MS24693-BB52	10-2	–
MS24693-BB52	10-2	–
MS24693-BB52	10-2	–
MS24693-BB52	10-2	–
MS24693-BB52	10-2	–
MS24693-BB52	10-2	–
MS24693-BB52	10-2	–
MS24693-BB52	10-2	–
MS24693-BB52	10-2	–
MS24693-BB52	10-2	–
MS24693-BB52	10-2	–
MS24693-BB52	10-3	–
MS24693-BB52	10-3	–
MS24693-BB52	10-3	–
MS24693-BB52	10-3	–
MS24693-BB52	10-3	–
MS24693-BB52	10-3	–
MS24693-BB52	10-3	–
MS24693-BB52	10-3	–
MS24693-BB52	10-3	–
MS24693-BB52	10-4	–
MS24693-BB52	10-4	–
MS24693-BB52	10-4	–
MS24693-BB52	10-4	–
MS24693-BB52	10-4	–
MS24693-BB52	10-4	–
MS24693-BB52	App A	–
MS24693S24	App A	–
MS24693-S24	10-36	2
MS24693-S24	10-37	20
MS24693-S24	10-4	24
MS24693-S24	App A	–
MS24693S275	App A	–
MS24693-S275	10-17	31
MS24693-S275	App A	–
MS24693-S287	8-3	–
MS24693-S294	5-1	9A
MS24693-S50	9-7.1	8
MS24693-S50	9-7.1	10
MS24693-S50	9-7.2	8
MS24693-S50	9-7.2	10
MS24694-47	3-6	490
MS24694-51	3-21	–
MS24694-51	3-6	250
MS24694-51	3-6	440

UNCONTROLLED COPY WHEN DOWNLOADED OR PRINTED

Visit www.enstromhelicopter.com for instructions to order an original manual and to register for email notification of updates.

PART NUMBER INDEX

Part Number	Figure	Item
MS24694-51	3-6	520
MS24694-51	3-6	900
MS24694-S301	5-2	290
MS24694S51	App A	–
MS24694-S51	3-15	11
MS24694-S51	App A	–
MS24694S54	App A	–
MS24694-S54	10-12	10
MS24694-S54	10-13	14
MS24694-S54	App A	–
MS24694S55	App A	–
MS24694-S55	10-16	5
MS24694-S55	App A	–
MS24694S56	App A	–
MS24694-S56	10-16	15
MS24694-S56	5-2	90
MS24694-S56	App A	–
MS24694S58	App A	–
MS24694-S58	3-15	10
MS24694-S58	5-2	755
MS24694-S58	10-13	14
MS24694-S58	App A	–
MS24694S94	App A	–
MS24694-S94	5-1	9
MS24694-S94	App A	–
MS24694S95	App A	–
MS24694-S95	5-4	21
MS24694-S95	App A	–
MS25182-2	10-12	21
MS25182-2	10-13	31
MS25182-2	10-15	4
MS25226-6-4	10-18	–
MS26574-1	10-16	18
MS26574-1	10-16	19
MS26574-10	10-2	28
MS26574-10	10-5	4
MS26574-10	10-6	4
MS26574-2	10-16	18
MS26574-2	10-16	18
MS26574-2	10-5	1
MS26574-2	10-6	1
MS26574-3	10-5	2
MS26574-3	10-6	2
MS26574-5	10-16	19
MS26574-5	10-5	3
MS26574-5	10-6	3
MS27039-0806	10-18	39
MS27039-0806	10-23.1	20
MS27039-0806	6-2	8
MS27039-0807	6-2	3
MS27039-0808	3-2	22
MS27039-1-07	10-17	24
MS27039-1-07	6-2	8
MS27039-1-08	10-17	2
MS27039-1-08	11-6	20
MS27039-1-08	3-2	–
MS27039-1-08	3-2	24
MS27039-1-08	3-21	–
MS27039-1-08	3-6.1	200
MS27039-1-08	5-11	260
MS27039-1-08	5-8	22
MS27039-1-08	5-8	54
MS27039-1-08	5-8	90
MS27039-1-08	6-11	6
MS27039-1-08	6-12	6
MS27039-1-09	10-16	13
MS27039-1-09	10-16	21
MS27039-1-09	10-33	14
MS27039-1-09	3-17	13
MS27039-1-09	3-6.1	270
MS27039-1-09	5-2	780
MS27039-1-09	5-2	810
MS27039-1-11	10-16	2
MS27039-1-11	10-16	9

UNCONTROLLED COPY WHEN DOWNLOADED OR PRINTED

Visit www.enstromhelicopter.com for instructions to order an original manual and to register for email notification of updates.

PART NUMBER INDEX

Part Number	Figure	Item	Part Number	Figure	Item
MS27039-1-11	10-17	10	MS27506B16-2	10-4	–
MS27039-1-11	10-18	24	MS27506B16-2	10-4	–
MS27039-1-11	3-12	12	MS27506B16-2	10-4	–
MS27039-1-11	3-17	14	MS27641-6	9-1	12
MS27039-1-11	5-2	690	MS27641-6	9-1	12
MS27039-1-14	6-11	8	MS27641-6	9-1	12
MS27039-1-14	6-12	8	MS27718-22-1	9-6	27
MS27039-1-16	3-15	7	MS27718-22-1	9-7.1	12
MS27039-1-16	5-2	750	MS27718-22-1	9-7.2	12
MS27039-1-17	3-14	–	MS28034-3	6-9	7
MS27212-3-4	10-18	–	MS28042-1A	10-1	–
MS27473E14B15S	10-4	–	MS28042-1A	10-1	–
MS27473E14B15SB	10-4	–	MS28042-1A	10-1	–
MS27473E14B18S	10-26	–	MS28042-1A	10-1	–
MS27473E14B18SA	10-4	–	MS28042-1A	10-1	–
MS27473E16B99S	10-4	–	MS28042-1A	10-1	–
MS27473E16B99SA	10-4	–	MS28042-1A	10-2	–
MS27473E16B99SB	10-4	–	MS28042-1A	10-2	–
MS27473E16B99SC	10-4	–	MS28042-1A	10-2	–
MS27488-16	10-4	–	MS28042-1A	10-2	–
MS27488-16	10-4	–	MS28042-1A	10-2	–
MS27488-16	10-4	–	MS28042-1A	10-2	–
MS27488-16	10-4	–	MS28042-1A	10-2	–
MS27488-16	10-4	–	MS28042-1A	10-2	–
MS27488-20	10-26	–	MS28042-1A	10-2	–
MS27488-20	10-4	–	MS28042-1A	10-26	–
MS27488-20	10-4	–	MS28042-1A	10-3	–
MS27488-20	10-4	–	MS28042-1A	10-3	–
MS27488-20	10-4	–	MS28042-1A	10-3	–
MS27488-20	10-4	–	MS28042-1A	10-3	–
MS27488-20	10-4	–	MS28042-1A	10-3	–
MS27488-20	10-4	–	MS28042-1A	10-3	–
MS27506B14-2	10-26	–	MS28042-1A	10-3	–
MS27506B14-2	10-4	–	MS28042-1A	10-3	–
MS27506B14-2	10-4	–	MS28042-1A	10-4	–
MS27506B14-2	10-4	–	MS28042-1A	10-4	–
MS27506B16-2	10-4	–	MS28042-1A	10-4	–

UNCONTROLLED COPY WHEN DOWNLOADED OR PRINTED

Visit www.enstromhelicopter.com for instructions to order an original manual and to register for email notification of updates.

PART NUMBER INDEX

Part Number	Figure	Item
MS28042-1A	10-4	–
MS28042-1A	10-4	–
MS28042-1A	10-4	–
MS28042-1A	10-4	–
MS28042-2A	10-2	–
MS28042-2A	10-2	–
MS28042-2A	10-2	–
MS28042-2A	10-3	–
MS28042-2A	10-3	–
MS28042-2A	10-3	–
MS28042-2A	10-4	–
MS28775-008	7-11	12
MS28775-013	7-9	–
MS28775-014	5-8	20
MS28775-015	4-4	30
MS28775-018	7-11	4
MS28775-020	5-8	10
MS28775-024	8-2	21
MS28775-029	7-9	21
MS28775-111	9-15	37
MS28775-113	5-8	11
MS28775-113	7-11	8
MS28775-131	4-4	15
MS28775-218	4-4	5
MS28775-233	5-1	32
MS28778-10	6-1	6
MS28778-10	6-9	20
MS28778-10	7-8	–
MS28778-10	7-8.1	–
MS28778-12	5-12	340
MS28778-12	5-7	13
MS28778-12	6-1	44
MS28778-12	6-9	16
MS28778-12	6-9	22
MS28778-2	7-11	6
MS28778-3	7-11	2
MS28778-3	7-8	33
MS28778-4	6-9	8
MS28778-4	6-9	25
MS28778-4	7-8	23
MS28778-4	7-8	33
MS28778-4	7-8.1	20
MS28778-4	7-8.1	30
MS28778-4	7-9	13
MS28778-6	6-4	–
MS28778-6	6-9	14
MS28778-6	7-9	27
MS28778-8	6-1	2
MS28778-8	6-1	4
MS28778-8	6-1	12
MS28778-8	6-9	12
MS28778-8	6-9	18
MS28778-8	7-8	16
MS28778-8	7-8.1	13
MS28778-8	7-9	–
MS28889-2	4-4	29
MS29512-04	5-12	–
MS29512-4	6-1	26
MS29513-010	5-8	53
MS29513-012	5-7	2
MS29513-017	5-7	8
MS29513-020	5-8	35
MS29513-020	5-8	76
MS29513-110	5-7	2
MS29513-116	5-7	6
MS29561-226	6-9	–
MS29561-232	5-1	–
MS3106F12-10S	10-1	–
MS3106F12-10S	10-2	–
MS3106F12-10S	10-3	–
MS3106F12-10S	10-3	–
MS3106F12-10SW	10-1	–
MS3106F12-10SW	10-2	–
MS3106F12-10SW	10-3	–

UNCONTROLLED COPY WHEN DOWNLOADED OR PRINTED

Visit www.enstromhelicopter.com for instructions to order an original manual and to register for email notification of updates.

PART NUMBER INDEX

Part Number	Figure	Item
MS3115-10A	10-12	7
MS3115-10A	10-13	4
MS3116F8-33S	10-27	16
MS3126F10-6S	10-12	23
MS3126F10-6S	10-13	33
MS3126F10-6S	10-15	3
MS3126F10-6S	10-2	–
MS3126F10-6S	10-2	–
MS3126F10-6S	10-3	–
MS3126F12-10S	10-1	–
MS3126F12-10S	10-18	40
MS3126F12-10S	10-2	–
MS3126F12-10S	10-2	–
MS3126F12-10S	10-2	–
MS3126F12-10S	10-2	–
MS3126F12-10S	10-3	–
MS3126F12-10S	10-3	–
MS3126F12-10S	10-4	–
MS3126F14-15S	10-25	9
MS3126F14-15S	10-26	10
MS33737-16C	10-3	–
MS33737-16C	10-3	–
MS33737-16C	10-4	–
MS33737-16C	10-4	–
MS3417-14C	10-22	3
MS3420-4	5-12	180
MS3456KT14S-5S	10-22	2
MS3476L20-16S	10-18	–
MS35206-203	11-4	3
MS35206-211	9-3	–
MS35206-225	9-6	18
MS35206-225	9-6	32
MS35206-225	9-7	18
MS35206-225	9-7	26
MS35206-225	9-7.1	24
MS35206-225	9-7.2	24
MS35206-227	10-4	–
MS35206-228	11-6	150
MS35206-244	10-30	2
MS35206-244	5-5	48
MS35206-244	9-7.1	23
MS35206-244	9-7.2	23
MS35206-245	3-2	–
MS35206-245	3-2	–
MS35206-245	3-2	–
MS35206-245	5-11	200
MS35206-245	5-8	88
MS35206-245	6-1	81
MS35206-245	6-1	108
MS35206-245	6-12	9
MS35206-245	6-3	54
MS35206-246	10-24.1	4
MS35206-246	3-2	–
MS35206-246	5-11	30
MS35206-246	5-12	250
MS35206-246	5-5	16
MS35206-246	5-5	52
MS35206-247	5-12	300
MS35206-248	7-3	27
MS35206-321	10-23	11
MS35206-325	6-8	15
MS35207-225	10-33	17
MS35207-245	6-1	63
MS35207-263	10-19	3
MS35207-263	10-23	5
MS35207-263	10-25	8
MS35207-263	10-26	9
MS35207-263	6-12	6
MS35207-265	5-4	28
MS35214-15	9-7.1	19
MS35214-15	9-7.2	19
MS35214-15	10-4	–
MS35214-40	10-4	40
MS35214-41	10-4	36

UNCONTROLLED COPY WHEN DOWNLOADED OR PRINTED

Visit www.enstromhelicopter.com for instructions to order an original manual and to register for email notification of updates.

PART NUMBER INDEX

Part Number	Figure	Item
MS35214-44	10-26	14
MS35215-58	10-1	–
MS35215-58	10-1	–
MS35215-58	10-1	–
MS35215-58	10-1	–
MS35215-58	10-1	–
MS35215-58	10-1	–
MS35215-58	10-2	–
MS35215-58	10-2	–
MS35215-58	10-2	–
MS35215-58	10-2	–
MS35215-58	10-2	–
MS35215-58	10-2	–
MS35215-58	10-2	–
MS35215-58	10-2	–
MS35215-58	10-2	–
MS35215-58	10-2	–
MS35215-58	10-26	13
MS35215-58	10-3	–
MS35215-58	10-3	–
MS35215-58	10-3	–
MS35215-58	10-3	–
MS35215-58	10-3	–
MS35215-58	10-3	–
MS35215-58	10-3	–
MS35215-58	10-3	–
MS35215-58	10-3	–
MS35215-58	10-3	–
MS35215-58	10-4	–
MS35215-58	10-4	–
MS35215-58	10-4	–
MS35215-58	10-4	–
MS35215-58	10-4	–
MS35215-58	10-4	–
MS35215-58	10-4	–
MS35215-58	10-4	–
MS35215-58	10-4	–
MS35265-15	7-9	–
MS35333-40	10-33	–
MS35333-40	10-38	50
MS35333-40	5-5	53
MS35333-42	3-6.2	–
MS35333-44	5-9	9
MS35333-75	6-4	11
MS35338-136	10-33	–
MS35338-139	10-17	7
MS35338-244	5-5	50
MS35338-41	10-24.1	10
MS35338-42	10-38	90
MS35338-42	5-11	40
MS35338-42	5-11	90
MS35338-42	5-11	140
MS35338-42	6-1	74
MS35338-99	10-4	38
MS35489-10	3-2	–
MS35489-10	3-2	–
MS35489-10	3-2	–
MS35489-10	5-12	140
MS35489-14	3-2	–
MS35489-14	3-2	–
MS35489-14	5-5	11
MS35489-14	5-5	36
MS35489-14	5-6	17
MS35489-14	7-7	7
MS35489-15	7-7	6
MS35489-17	3-2	–
MS35489-17	3-2	–
MS35489-20	3-2	–
MS35489-20	3-8	35
MS35489-20	5-5	37
MS35489-20	5-6	43
MS35489-4	10-24.2	7

UNCONTROLLED COPY WHEN DOWNLOADED OR PRINTED

Visit www.enstromhelicopter.com for instructions to order an original manual and to register for email notification of updates.

PART NUMBER INDEX

Part Number	Figure	Item
MS35489-6	10-21	3
MS35489-7	5-6	42
MS35489-7	7-7	7
MS35490-1	10-4	42
MS35649-2314	6-4	12
MS35649-262	10-24.1	8
MS35649-282	10-24.1	5
MS35649-282	10-38	100
MS35649-282	5-11	60
MS35649-282	5-11	110
MS35649-282	5-11	160
MS35649-282	6-1	82
MS35649-282	9-12	39
MS35649-286	10-4	39
MS35769-11	7-8	4
MS35769-11	7-9	24
MS35769-6	7-8	6
MS35769-6	7-8.1	3
MS35769-9	7-11	10
MS35842-13	7-9	–
MS51521B8S	11-1	5
MS51521B8S	6-1	–
MS51525-6-4	7-9	11
MS51525B3S	7-1.1	220
MS51525B4S	7-8	24
MS51525B4S	7-8.1	21
MS51525B4S	7-9	16
MS51527A65	6-4	38
MS51527A6S	6-4	1
MS51527A-6S	6-3	10
MS51527B3S	7-1.1	240
MS51527B4S	7-9	16
MS51922-1	3-5	20
MS51922-1	3-6.2	50
MS51957-26	10-36	5
MS51957-26	10-37	40
MS51957-26	11-6	–
MS51957-26	11-6	–
MS51957-26	11-6	–
MS51958-26	10-33	17
MS5198-26	10-33	14
MS9101-03	6-1	28
MS9135-01	6-1	55
MS995C32	App A	–
MTP5S-E6-C	5-12	240
MTP-J-F	10-25	–
MTP-J-F	10-25	–
MTP-J-F	10-26	–
MTP-J-F	10-26	–
MTP-J-M	10-25	10
MTP-J-M	10-26	11
N5000-175-PP	7-11	20
N5000-187-S-PP	7-10	8
N5000-187-S-PP	7-2	8
N5000-187-S-PP	7-2	8
N5000-206-PP	7-11	15
N5000-62-PP	9-3	6
N5000-87-PP	9-3	14
N5002-100	8-7	10
N5002-125-PP	9-11	4
N5002-268-PP	9-15	10
N5002-354-S-PP	7-6	13
N5002-354-S-PP	7-6.1	12
N500-268-S-PP	7-1	30
N5100-118	6-10	7
N5100-137-S-PP	7-1	7
N5100-137-S-PP	7-1.1	18
N5100-78-S-PP	7-1	21
N5100-98-S-PP	7-2	9
N5100-98-S-PP	7-2	9
N5108-56-PP	9-3	20
NAJ1-02BC	3-13	24
NAJ1-02BC	3-2	–
NAJ1-62	3-8	23

UNCONTROLLED COPY WHEN DOWNLOADED OR PRINTED

Visit www.enstromhelicopter.com for instructions to order an original manual and to register for email notification of updates.

PART NUMBER INDEX

Part Number	Figure	Item
NAJ1-82	5-8	2
NAJ1-82	5-8	28
NAJ1-82	5-8	69
NAJ1-82	6-12	–
NAJ1-82-BC	10-28	17
NAS 6203-17H	9-10	7
NAS1024N08K	4-5	–
NAS1024N08K	4-5	–
NAS1033A3	10-13	5
NAS1068A3	10-18	4
NAS1068A3	3-2	–
NAS1068A3	3-2	–
NAS1068A3	3-2	26
NAS1068A3	5-2	480
NAS1068A3	5-2	520
NAS1068A3	6-3	43
NAS1068A3	6-3	48
NAS1068-A3	5-8	24
NAS1068-A3	5-8	56
NAS1068-A3	5-8	92
NAS1068-A3	6-9	27
NAS1068A4	10-18	–
NAS1096-2-10	5-8	5
NAS1096-2-10	5-8	31
NAS1096-2-10	5-8	72
NAS1096-2-8	5-8	72
NAS1097AD3-4	11-2	19
NAS1097AD3-5	3-18	–
NAS1103-11	3-17	8
NAS1104-9D	9-2	7
NAS1149BN832H	10-4	37
NAS1149C0332R	6-1	80
NAS1149C0332R	6-6	23
NAS1149C0332R	6-8	6
NAS1149C0363R	3-4	140
NAS1149C0363R	3-4	200
NAS1149C0363R	6-8	24
NAS1149C0432R	3-18	34
NAS1149C0432R	6-8	20
NAS1149C0432R	7-1	17
NAS1149C0432R	9-15	36
NAS1149C0463R	5-1	–
NAS1149C0463R	9-15	36
NAS1149C0463R	9-15	40
NAS1149C0563R	7-5	29
NAS1149C0632R	3-17	27
NAS1149C0632R	3-17	33
NAS1149D0316H	3-9	10A
NAS1149D0316H	6-8	18
NAS1149D0316J	3-17	9
NAS1149D0316J	3-8	22
NAS1149D0363H	11-2	16
NAS1149D0363H	11-2	31
NAS1149D0363H	6-8	18
NAS1149D0363J	6-1.1	415
NAS1149D0363J	7-3	3
NAS1149D0416H	5-1	5
NAS1149D0463J	3-16	12
NAS1149D0463J	7-6	17
NAS1149D0463J	7-6.1	16
NAS1149D0563H	8-1	3
NAS1149D0563H	8-2	3
NAS1149DN816J	7-3	28
NAS1149DN816J	8-1	18
NAS1149DN816J	8-2	18
NAS1149DN832H	8-3	4
NAS1149F0332P	10-22	14
NAS1149F0332P	3-12	13
NAS1149F0332P	3-9	10
NAS1149F0332P	4-2	28
NAS1149F0332P	5-5	57
NAS1149F0332P	6-10	10
NAS1149F0332P	6-6	10
NAS1149F0332P	7-1.1	110

UNCONTROLLED COPY WHEN DOWNLOADED OR PRINTED

Visit www.enstromhelicopter.com for instructions to order an original manual and to register for email notification of updates.

PART NUMBER INDEX

Part Number	Figure	Item
NAS1149F0332P	7-3	18
NAS1149F0332P	7-9	5
NAS1149F0332P	9-12	37
NAS1149F0332P	9-7.1	29
NAS1149F0363P	3-10	7
NAS1149F0363P	3-12	14
NAS1149F0363P	3-18	23
NAS1149F0363P	3-18	46
NAS1149F0363P	3-8	16
NAS1149F0363P	4-6	13
NAS1149F0363P	5-12	40
NAS1149F0363P	5-8	91
NAS1149F0363P	6-1	36
NAS1149F0363P	6-1	85
NAS1149F0363P	6-1.1	430
NAS1149F0363P	7-3	34
NAS1149F0363P	7-9	5
NAS1149F0432P	3-8	4
NAS1149F0432P	3-8	12
NAS1149F0432P	3-10	11
NAS1149F0432P	3-12	4
NAS1149F0432P	3-16	16
NAS1149F0432P	3-9	3
NAS1149F0432P	4-2	9
NAS1149F0432P	5-1	35
NAS1149F0432P	6-1	20
NAS1149F0432P	7-8.2	75
NAS1149F0432P	9-13	6
NAS1149F0463P	3-8	4
NAS1149F0463P	3-18	32
NAS1149F0463P	3-18	42
NAS1149F0463P	4-2	11
NAS1149F0463P	4-6	3
NAS1149F0463P	5-12	90
NAS1149F0463P	8-5	16
NAS1149F0463P	9-13	25
NAS1149F0532P	4-3	7
NAS1149F0532P	4-3	9
NAS1149F0532P	6-1	92
NAS1149F0532P	6-1	94
NAS1149F0532P	7-2	12
NAS1149F0532P	8-1	6
NAS1149F0532P	8-2	6
NAS1149F0532P	9-13	26
NAS1149F0563	9-13	21
NAS1149F0563P	3-10	19
NAS1149F0563P	4-2	13
NAS1149F0563P	4-2	18
NAS1149F0563P	4-6	6
NAS1149F0563P	6-1	94
NAS1149F0563P	6-1	102
NAS1149F0563P	7-6	4
NAS1149F0563P	7-6	4
NAS1149F0563P	7-6	4
NAS1149F0563P	7-6.1	4
NAS1149F0563P	8-1	6
NAS1149F0563P	8-2	6
NAS1149F0632P	4-3	5
NAS1149F0663P	3-18	5
NAS1149F0663P	3-18	14
NAS1149F0663P	4-2	20
NAS1149F0663P	4-3	3
NAS1149F0663P	7-6	21
NAS1149F0663P	7-6.1	20
NAS1149F0732P	9-11	8
NAS1149FN316P	3-2	–
NAS1149FN616P	10-24.1	9
NAS1149FN616P	10-4	–
NAS1149FN816P	10-24.1	6
NAS1149FN816P	10-38	80
NAS1149FN816P	3-2	–
NAS1149FN816P	3-2	–
NAS1149FN816P	5-5	17
NAS1149FN816P	5-5	49

UNCONTROLLED COPY WHEN DOWNLOADED OR PRINTED

Visit www.enstromhelicopter.com for instructions to order an original manual and to register for email notification of updates.

PART NUMBER INDEX

Part Number	Figure	Item
NAS1149FN816P	5-8	74
NAS1149FN832P	11-2	13
NAS1149FN832P	11-2	29
NAS1149FN832P	5-11	50
NAS1149FN832P	5-11	100
NAS1149FN832P	5-11	150
NAS1149FN832P	5-12	320
NAS1149FN832P	6-1	75
NAS1149FN832P	6-1	110
NAS1149FN832P	8-1	33
NAS1149FN832P	8-2	38
NAS1204-40D	9-2	13
NAS1306-8	3-1	210
NAS1351-3H32	7-9	22
NAS1351C3H8	10-18	2
NAS1351C3H8	10-19	–
NAS1352-08H6	5-8	79
NAS144DH-10	7-3	8
NAS144DH-12	7-3	9
NAS146DH-22	3-1	190
NAS146DH-22	3-7	4
NAS146DH-24	3-1	110
NAS146DH-24	3-7	2
NAS1474-A3	6-3	45
NAS1474-A3	6-3	47
NAS1523-4E	7-8.2	60
NAS1611-025	8-5	4
NAS1611-025	8-5	11
NAS1611-029	8-3	14
NAS1611-133	8-3	15
NAS1611-137	8-5	15
NAS1612-10	8-5	24
NAS1612-2	7-5	9
NAS1612-2	8-5	25
NAS1612-2	App A	–
NAS1612-2A	7-1	14
NAS1612-2A	7-5	9
NAS1612-2A	8-2	33
NAS1612-2A	8-5	25
NAS1612-2A	App A	–
NAS1612-8	7-5	6
NAS1612-8	App A	–
NAS1612-8A	7-5	6
NAS1612-8A	App A	–
NAS1833-3-500	5-2	120
NAS1833-3-500	5-2	210
NAS1833-3-500	5-2	280
NAS1833-3-500	5-2	370
NAS1834A3-500	5-2	730
NAS1834A3K500	5-3	735
NAS1922-0100-3	5-5	4
NAS1922-0150-3	4-5	–
NAS1922-0150-3	4-5	–
NAS1922-0150-3	4-5	–
NAS1922-0150-3	4-5	–
NAS1922-0150-3	4-5	–
NAS1922-0150-3	4-5	–
NAS1922-0225-3	5-5	10
NAS1922-0275-3	7-1.1	60
NAS1922-0350-3	6-2	11
NAS1922-0700-3	6-3	20
NAS1922-0925-3	6-3	21
NAS1922-100-3	6-1	47
NAS428K4-10	9-14	29
NAS509-12	6-1	103
NAS509-12	7-4	23
NAS509-12	7-5	26
NAS509-8	8-5	19
NAS559-3	8-5	18
NAS617-2	10-26	–
NAS617-3	6-1	10
NAS617-5	6-1	8
NAS620-10	6-12	27
NAS620-10	6-9	32

UNCONTROLLED COPY WHEN DOWNLOADED OR PRINTED

Visit www.enstromhelicopter.com for instructions to order an original manual and to register for email notification of updates.

PART NUMBER INDEX

Part Number	Figure	Item	Part Number	Figure	Item
NAS6203-10D	6-6	21	NAS6206-58	4-1	13
NAS6203-13D	6-7	16	NAS620-6L	9-4	–
NAS6203-14D	6-6	9	NAS626-58	8-6	1
NAS6203-14D	6-7	11	NAS6604-13	3-16	9
NAS6203-14D	9-7.1	28	NAS6604-23	3-12	7
NAS6203-2	9-1	20	NAS6604-23	3-16	13
NAS6203-27	9-8	1	NAS6604-25	3-12	7
NAS6203-38	9-8	12	NAS6604H2	5-1	31
NAS6203-6	9-2	42	NAS686A06K	10-28	2
NAS6203-6	9-2	52	NAS686A06K	10-29	60
NAS6203-6	9-4	6	NAS686A06K	10-29	260
NAS6203-7D	6-8	5	NAS686A08K	10-28	17
NAS6203-8D	6-8	23	NAS686A08K	3-2	–
NAS6203-9D	6-6	13	NAS686A08K	3-2	–
NAS6203-9D	9-6	39	NAS686A08K	6-12	–
NAS6203-9D	9-7.1	32	NAS686A08K	6-2	5
NAS6204-11D	6-8	19	NAS686A3K	3-13	24
NAS6204-11D	9-2	1	NAS686-A08K	6-1.1	–
NAS6204-11D	9-2	59	NAS73-3E108	3-10	8
NAS6204-11D	9-8	22	NAS73-4E002	9-14	24
NAS6204-12D	9-5	6	NAS73-4E003	9-2	3
NAS6204-14D	9-2	38	NAS73-4E004	9-14	27
NAS6204-16D	9-14	20	NAS73-4E004	9-5	7
NAS6204-16D	9-2	30	NAS73-5E003	9-5	26
NAS6204-21D	9-2	10	NAS75-4-006	9-2	60
NAS6204-26D	9-14	19	NAS75-6-010	4-1	16
NAS6204-26D	9-2	31	NAS77-6-012	4-1	15
NAS6204-46D	9-5	16	NAS77A6–007	3-10	3
NAS6204-5	3-16	11	NK500-8-5	9-3	30
NAS6204-9	3-12	3	NK-500-8R5	8-1	17
NAS6204-9D	9-14	14	NK-500-8R5	8-2	48
NAS6205-12D	9-5	23	NK500-8R6	App A	–
NAS6205-4H	6-1	101	NK-500-8R6	5-8	16
NAS6206-23D	9-1	30	NK-500-8R6	8-1	17
NAS6206-24D	9-1	30	NK-500-8R6	8-3	35
NAS6206-32	9-12	20	NK-500-8R6	App A	–
NAS6206-58	3-1	390	NK500-8R8	App A	–

UNCONTROLLED COPY WHEN DOWNLOADED OR PRINTED

Visit www.enstromhelicopter.com for instructions to order an original manual and to register for email notification of updates.

PART NUMBER INDEX

Part Number	Figure	Item	Part Number	Figure	Item
NK-500-8R8	8-2	17	PK 86XZ-8-8	6-1	22
NK-500-8R8	App A	–	PLB2S-CO	7-8	40
NK-510-10R10	8-1	27	PLB2S-CO	7-8.1	36
NK-510-10R10	8-2	31	PLB3S-CO	9-7.1	35
NP500-8R6	App A	–	PLB3S-CO	9-7.2	28
NP-500-8R6	App A	–	PLT.7M-MO	10-24.2	9
NP500-8R8	8-3	3	PLT2S-CO	10-24.2	11
NP500-8R8	App A	–	PLT4S-CO	11-4	11
NP-500-8R8	App A	–	PLT4S-CO	11-5	320
NP5-4A	3-10	5	PR1425B1/2	3-3	19
NP5-6A	3-10	5	PR1425B1/2	3-3	23
NPN	3-6.2	60	PR1425B1/2	3-3	25
NPN	5-9	6	PR1425B2	3-3	–
NPS24694S5	9-6	13	PR1440B1/2QT	5-2	30
NPS24694S5	9-6	16	PR1440B2	5-2	30
NPS24694S5	9-7	13	PR1440B2	5-7	–
NPS24694S5	9-7	16	PWMS-H25-C	10-27	7
NPS24694S5	9-7.1	2	QS200-M10S	5-3	23
NPS24694S5	9-7.2	2	QS200-M10S	5-6	7
P1-112	9-1	–	QS200-M12S	5-4	26
P1-90254	9-7.1	15	QS200-M24S	10-23	13
P1-90254	9-7.2	15	QS200-M28S	5-3	–
P4-900054	9-6	28	QS200-M32S	5-6	12
P4-900054	9-7.1	13	RST-200	8-3	12
P4-900054	9-7.2	13	RV8-4416	10-10	7
PACMO-APZ21N	10-4	28	S10P175	10-33	15
PACMO-APZ21N	10-4	28	S25P280	3-6.2	80
PAI700	10-1	13	S4-200	App A	–
PAI700	10-2	13	S500-12	10-24.1	2
PAI700	10-3	13	S500-12	5-12	230
PAI700	10-4	13	S500-12	6-4	4
PCS111A	App A	–	S500-14	6-4	27
PCS-111A	10-24	1	S500-16	10-24.1	3
PCS-111A	10-24.1	1	S500-16	5-12	280
PCS-111A	10-24.2	3	S500-18	5-12	290
PCS-111A	App A	–	S500-3	6-1	107
PGZF0A0180	8-5	9	S500-6	6-4	28

UNCONTROLLED COPY WHEN DOWNLOADED OR PRINTED

Visit www.enstromhelicopter.com for instructions to order an original manual and to register for email notification of updates.

PART NUMBER INDEX

Part Number	Figure	Item	Part Number	Figure	Item
S500-8	10-24.1	14	SD15F10JVL0	10-3	–
S500-8	6-1	106	SD15F10JVL0	10-4	–
S500-8	6-4	3	SD15M10JVL0	10-1	–
S-6424EC-1	11-3	1	SD15M10JVL0	10-2	–
S6P150	11-5	270	SD15M10JVL0	10-3	–
S83BZ-2	7-1	11	SD15M10JVL0	10-3	–
S83BZ-2	7-1.1	180	SD15M10JVL0	10-4	–
S83BZ-2	7-11	9	SE25PFR-MR0	6-7.3	50
S8P150	10-38	40	SF96-20	App A	–
S8P150	11-3	4	SF96-20-PT	App A	–
S8P150	3-2	–	SJ-3526	10-35	–
S8P150	3-2	–	SJ-3526	7-7	9
S8P150	3-2	–	SJ-3527	10-35	–
S8P150	3-2	–	SJ-3527	7-7	8
S8P150	3-3	22	SK3500	10-18	18
S8P150	5-5	18A	SL61N5F	8-7	16
S8P-150	11-1	24	SL61N5P	8-7	16
S8P-150	4-5	14	SL61N5P	App A	–
S8P-270	3-6.1	160	SL61N-5P	App A	–
S-9213EC-2	11-1	1	SL61W5P	8-7	17
S-9216EC-1	6-1	11	SL61W5P	App A	–
S-9230EC-1	11-1	3	SL61W-5P	App A	–
S9704EC-1	11-3	2	SM21919F8	5-5	6
SC628ANP	10-10	–	SO-0163-9033	6-7.1	8
SC628ANP	App A	–	SO-0163-9033	6-7.3	20
SC628ANPR	10-10	–	SPDD2315	6-1	24
SC628ANPR	App A	–	SPDD2405	10-27	13
SC628D	10-10	2	SPDD2415	10-27	13
SC628DR	10-10	2	SS-094-0625	8-4	2
SC628W	10-10	3	SS-200-1-2SBT	10-26	6
SC628W	App A	–	SS-44F	10-27	18
SC628WR	10-10	3	SS-44F	10-36	17
SC628WR	App A	–	SSR-0075-S17	9-6	19
SCEET12	6-2	10	SST1.5I-M	10-24.2	6
SD15F10JVL0	10-1	–	SST1.5IMP	10-36	–
SD15F10JVL0	10-2	–	SST1.5I-MP	10-15	–
SD15F10JVL0	10-3	–	SST1.5I-MP	10-24.2	6

UNCONTROLLED COPY WHEN DOWNLOADED OR PRINTED

Visit www.enstromhelicopter.com for instructions to order an original manual and to register for email notification of updates.

PART NUMBER INDEX

Part Number	Figure	Item	Part Number	Figure	Item
SST1.5I-MP	10-25	3	VC1019	6-1	50
SST1.5I-MP	10-26	3	VC-3	11-6	190
SST1.5I-MP	10-33	11	VH-175-S02	9-1	4
SST1.5I-MP	10-33	20	VH-218	7-1	6
SST1.5I-MP	10-39	70	VH-218	7-1.1	19
SST1.5I-MP	6-9	10	VH-225-S02	9-4	13
SST1M-MP	5-5	13	VH-325	7-4	4
SST1M-MP	10-24	9	VH-325	7-5	12
SST1M-MP	10-24.1	–	VH-337	7-1	15
SST1M-MP	10-24.2	2	VH-375	7-8	28
SST1M-MP	10-25	5	VH-375	7-8.1	25
SST1M-MP	10-26	5	VH-400	7-4	7
SST1M-MP	10-27	8	VH-400	7-5	4
SST1M-MP	10-36	–	VH-75	8-3	33
SST1M-MP	6-7.3	60	VH-87-S02	9-1	13
SST2S-MP	10-24.1	–	VH-87-S02	9-1	13
SST2S-MP	10-24.2	–	VH-87-S02	9-1	13
SST2S-MP	10-33	11	VI-P4T-K2	5-8	47
SST2S-MP	10-33	20	VI-P6T-K2	5-8	40
SST2S-MP	10-36	–	VI-P6T-K2	5-8	81
SST2S-MP	10-39	80	VR1528-11B	10-18	1
SST2S-MP	5-6	19	VR1528-11B	10-19	1
SW44	11-6	130	VTB11350	9-11	–
T14BH517BC	10-10	5	W-09	8-1	21
T2-0055	9-6	29	W-09	8-2	25
T2-0055	9-7	23	W-09	8-4	5
T2-0055	9-7.1	16	W1283	10-31	5
T2-0055	9-7.2	16	W1283	App A	–
T3-120-1	10-28	9	W1284G	App A	–
T3-120-1	10-29	130	W1284-G	10-31	6
T4-0198	9-1	–	W1284-G	App A	–
TF3056FR	5-2	860	W1284R	App A	–
TS-023	9-15	8	W1284-R	10-31	6
TS-023	9-15	15	W1284-R	App A	–
TSP-1728	10-14	11	W129028	App A	–
U2-025	9-1	–	W1290-28	10-31	2
V3-1	9-3	33	W1290-28	App A	–

UNCONTROLLED COPY WHEN DOWNLOADED OR PRINTED

Visit www.enstromhelicopter.com for instructions to order an original manual and to register for email notification of updates.

PART NUMBER INDEX

Part Number	Figure	Item	Part Number	Figure	Item
W389CX-13	10-18	34			
W-47	9-15	11			
W97CSX-2	10-18	15			
W97CSX-2	App A	–			
WC-22-6	8-6	2			
WC400-00	4-2	25			
Weld-On 45	10-33	–			
WP-22-6	8-6	3			
X109HT	3-6.1	10			
X1333HT	11-5	170			
X1333HT	3-6.1	40			
X-142	8-3	–			
X-142	8-3	–			
Y9485	4-5	24			
Z1200J-02	6-1	–			
ZFD10940732	App A	–			
ZFD-1094-0-7-32	9-1	37			
ZFD-1094-0-7-32	App A	–			

UNCONTROLLED COPY WHEN DOWNLOADED OR PRINTED

Visit www.enstromhelicopter.com for instructions to order an original manual and to register for email notification of updates.

PART NUMBER INDEX

Part Number	Figure	Item	Part Number	Figure	Item

INTENTIONALLY LEFT BLANK

UNCONTROLLED COPY WHEN DOWNLOADED OR PRINTED

Visit www.enstromhelicopter.com for instructions to order an original manual and to register for email notification of updates.

SECTION 1

INTRODUCTION

UNCONTROLLED COPY WHEN DOWNLOADED OR PRINTED

Visit www.enstromhelicopter.com for instructions to order an original manual and to register for email notification of updates.

INTENTIONALLY LEFT BLANK

UNCONTROLLED COPY WHEN DOWNLOADED OR PRINTED

Visit www.enstromhelicopter.com for instructions to order an original manual and to register for email notification of updates.

SECTION 1 – TABLE OF CONTENTS

Cover	1-1
Table of Contents	1-1.2
Scope	1-2
Introductory Information	1-2
Detailed Parts List	1-3
Appendices	1-4

UNCONTROLLED COPY WHEN DOWNLOADED OR PRINTED

Visit www.enstromhelicopter.com for instructions to order an original manual and to register for email notification of updates.

NOTE

Please read the following introductory material carefully and completely. Understanding how information is presented will allow you to make optimum use of this catalog,

SCOPE

The Illustrated Parts Catalog (IPC) provides by means of text and companion illustrations, complete definition of all repair parts and spares items available to the customer. The IPC contains information on TH-28/480 series helicopters manufactured by The Enstrom Helicopter Corporation, Menominee, Michigan. It is furnished for the purpose of parts procurement ONLY and shall not be used for any other purpose.

Orders for repair parts for engine or accessories (generators, fuel controls, etc.) used in Enstrom helicopters should be placed with the engine or accessory manufacturer's authorized distributor or dealer and not through The Enstrom Helicopter Corporation.

INTRODUCTORY INFORMATION

The introductory portion of the IPC contains Record of Revisions, Change Methods, Title Page, Recommended Change Report, Table of Contents, Effective Page List and Part Number Index.

RECORD OF REVISIONS

A Record of Revisions page is placed in front of the manual to record the insertion of revisions as they are issued for the publication.

CHANGE METHODS

The IPC is periodically brought up-to-date by one of two methods.

Normal revisions are issued in the form of replacement pages and added pages to be inserted at designated locations. Revision instructions are included on the Revision Cover page, and once the revisions are inserted in the manual, the Record of Revisions page should be updated and the Revision Cover page be placed behind the Record of Revisions page.

Temporary revisions are issued in advance of the normal revision. In most cases, for example, the purpose of a temporary revision is to expedite the release of safety critical changes to the field. A temporary revision page is identified by a unique index number, i.e. Rev. 13, TRT-001 (Revision 13, Temporary Revision (Turbine) 001). This unique index number is found in the revision level field of the page footer (left side). Temporary revision pages shall be printed on yellow stock. Instructions are contained on the temporary revision page, and once the temporary revision pages are inserted in the manual, the Record of Temporary Revisions page should be updated. Temporary revisions shall be maintained in the IPC until such time they are incorporated into the next normal revision issue.

UNCONTROLLED COPY WHEN DOWNLOADED OR PRINTED

Visit www.enstromhelicopter.com for instructions to order an original manual and to register for email notification of updates.

TITLE PAGE

The Title Page lists the date of the currently effective edition or reissue. Information is given noting whether the contents are the initial issue of a publication or a reissue of the entire publication.

RECOMMENDED CHANGE REPORT

The Recommended Change Report is a form that can be used to notify Enstrom Helicopter Corporation of any errors or other changes requested by the user.

TABLE OF CONTENTS

The Table of Contents lists all material contained in the catalog by Section Number, Figure Number, Title and Page Number.

EFFECTIVE PAGE LIST

The Effective Pages List contains all of the pages that are currently effective for the publication, and their effective date.

PART NUMBER INDEX

The Part Number Index provides a listing of all of the part numbers in the catalog, with their corresponding Figure and Item numbers.

DETAILED PARTS LIST

The Detailed Parts Lists begin at Section 3 and contain all replacement parts starting with the helicopter major assemblies and proceeding through the various installations, subassemblies, detail and component parts breakdowns.

CHANGE BARS

Change bars are located throughout the IPC to identify information that has been changed. The Revision Number and Date of those changes is located at the bottom of each page.

ILLUSTRATIONS

Each major assembly or component is separately illustrated. Each part or assembly portrayed in the illustration is assigned an Item Number for cross reference to the parts list bearing the same figure number as the illustration.

ITEM NUMBER COLUMN

This column shows the Item Numbers assigned to each part in the list. This number links the part to the detail parts on the associated illustration.

- A dash (–) printed in this column indicates the part is not illustrated.
- Symbols printed in this column refer to footnotes at the end of the parts list.

UNCONTROLLED COPY WHEN DOWNLOADED OR PRINTED

Visit www.enstromhelicopter.com for instructions to order an original manual and to register for email notification of updates.

PART NUMBER COLUMN

Part numbers in this column are used to identify parts for ordering. In most cases the number shown is the manufacturer's part number.

DESCRIPTION COLUMN

This column lists the nomenclature and description of parts, reference to next higher assemblies, and reference to other locations for breakdown of separately illustrated assemblies or components.

Indentation System

A period/dot system is used to show the relationship between major assemblies/components and the respective detailed parts. The nomenclature of major assemblies and/or components is preceded by a single period/dot. Parts preceded by two periods/dots are detailed parts of the preceding part with one period/dot. All parts preceded by three periods/dots are detailed parts of the preceding part with two periods/dots, and so on.

QTY PER ASSY COLUMN

This column lists the total number of units required at that location

- The abbreviation A/R may be located in this column indicating that the part is to be used as required during installation. Examples are shims, safety wire, and adhesives.
- The abbreviation REF may be located in this column indicating that the part listed is for reference only and is not shown in the illustration.

EFFECTIVITY COLUMN

This columns identifies if the parts are applicable to the TH-28, 480, and/or 480B model helicopters. Notes located at the illustrations or after the detailed parts lists may also contain applicability information.

APPENDICES

The Appendices at the rear of the IPC contain additional information about equivalent parts and hardware substitutions.

UNCONTROLLED COPY WHEN DOWNLOADED OR PRINTED

Visit www.enstromhelicopter.com for instructions to order an original manual and to register for email notification of updates.

SECTION 2

PARTS ORDERING INFORMATION

UNCONTROLLED COPY WHEN DOWNLOADED OR PRINTED

Visit www.enstromhelicopter.com for instructions to order an original manual and to register for email notification of updates.

INTENTIONALLY LEFT BLANK

UNCONTROLLED COPY WHEN DOWNLOADED OR PRINTED

Visit www.enstromhelicopter.com for instructions to order an original manual and to register for email notification of updates.

SECTION 2 – TABLE OF CONTENTS

Cover	2-1
Table of Contents	2-1.1
General	2-2
Parts Orders	2-2
Shipment	2-3
Emergency Requirements	2-3
Credit Terms	2-3

UNCONTROLLED COPY WHEN DOWNLOADED OR PRINTED

Visit www.enstromhelicopter.com for instructions to order an original manual and to register for email notification of updates.

GENERAL

All owner parts orders should be placed through your nearest Enstrom Helicopter Dealer or Service Center. If you are unable to locate your Dealer or Service Center, contact the Enstrom Customer Service Manager for this information.

PARTS ORDERS

All parts orders should be addressed to:

Parts Coordinator

Enstrom Helicopter Corporation
2209 22nd Street
Menominee, MI 49858-3595

Telephone: (906) 863-1200
Fax: (906) 863-6821

Email: customerservice@enstromhelicopter.com

Please complete the parts order form located on the Enstrom.com website at: http://enstromhelicopter.com/wp-content/uploads/2012/03/PARTS-ORDER-FORM-V4.pdf
If you do not have access to the form, please include the information outlined in the following paragraphs.

To ensure shipment of the proper parts, be sure to include the model number and the serial number on each aircraft order. This information can be found in the Aircraft Log book and on the data plate attached to the right rear side of the tailcone.

Order by part number and description as shown in the IPC list. Be sure to list the quantity required. Incorrect numbers will be returned for clarification and delay shipment of your order.

The purchase order must indicate the name and address of the ordering organization, and the name and address of the organization to whom the parts are to be shipped. It must be signed by an authorized representative of the dealer or service center.

If parts are ordered by telephone, the purchase order must have the words "confirming order" and the confirming date on the purchase order to avoid duplication of shipments.

All returned orders will be assessed a 20% restocking charge.

NOTE

The Enstrom Helicopter Corporation reserves the right, without prior notice, to supply substitute interchangeable parts for the ordered part when design changes, revised specifications, stock supply, or product improvements make such a substitution necessary.

UNCONTROLLED COPY WHEN DOWNLOADED OR PRINTED

Visit www.enstromhelicopter.com for instructions to order an original manual and to register for email notification of updates.

SHIPMENT

All purchase orders must specify the desired method of shipment. If this information is not stated, the shipment will be made via surface transportation. The specific carrier will be determined at the time of shipment based on weight, dimensions, and destination. Shipment by other than surface transportation must be indicated at the time the order is placed and must be shown on the purchase order.

All truck and air freight charges are on a collect on delivery (C.O.D) basis.

EMERGENCY REQUIREMENTS

Telephone orders for emergency (**AOG**) situations receive priority processing, and should be kept to a minimum; since they delay shipment of normal orders.

CREDIT TERMS

Enstrom does not automatically establish credit terms. All orders for domestic shipment are sent C.O.D. unless prior arrangements have been made. Payment arrangements for export order shipments may be accomplished by establishment of an irrevocable letter of credit for major shipments. All other shipments will be by sight draft.

Requests for an open account or other credit terms should include a copy of the latest financial report; three (3) credit references; one (1) banking reference; and the desired amount of credit. This information should be addressed to:

Controller
Enstrom Helicopter Corporation
2209 22nd Street
Menominee, MI 49858-3595

By closely following the above instructions, you will help the Enstrom Helicopter Corporation provide faster delivery and better service.

UNCONTROLLED COPY WHEN DOWNLOADED OR PRINTED

Visit www.enstromhelicopter.com for instructions to order an original manual and to register for email notification of updates.

INTENTIONALLY LEFT BLANK

UNCONTROLLED COPY WHEN DOWNLOADED OR PRINTED

Visit www.enstromhelicopter.com for instructions to order an original manual and to register for email notification of updates.

SECTION 3

STRUCTURES

UNCONTROLLED COPY WHEN DOWNLOADED OR PRINTED

Visit www.enstromhelicopter.com for instructions to order an original manual and to register for email notification of updates.

INTENTIONALLY LEFT BLANK

UNCONTROLLED COPY WHEN DOWNLOADED OR PRINTED

Visit www.enstromhelicopter.com for instructions to order an original manual and to register for email notification of updates.

SECTION 3 – TABLE OF CONTENTS

	Cover	3-1.1
	Table of Contents	3-1.2
3-1	Structural Assembly	3-2
3-2	Cowling and Access Panels	3-8
3-3	Windshield and Window Installation	3-16
3-4	Sliding Window Installation	3-22
3-5	Engine Cowl Door Opener	3-24
3-6	Cabin Door Assembly	3-25.1
3-6.1	Cabin Door Installation	3-25.7
3-6.2	Cabin Door Opener	3-26
3-7	Tailcone Installation	3-30
3-8	Horizontal and Vertical Stabilizer Installation	3-32
3-9	Tail Rotor Guard and Extension Tube Installation	3-36
3-10	Tail Rotor Guard Installation (4172000-101)	3-38
3-11	Tail Rotor Guard Installation (4172000-9)	3-40
3-12	Tailcone Vibration Absorber Installation	3-42
3-13	Tail Rotor Drive Shaft Cover Installation	3-46
3-14	Seat Installation - TH-28	3-52
3-15	Seat Installation - 480/480B	3-54
3-16	Seat Assembly	3-56
3-17	Seat Base Assembly	3-58
3-18	Bench Seat Installation	3-62
3-19	Passenger Footrest Installation	3-70
3-20	Exterior Markings	3-72
3-21	Interiors	3-76

UNCONTROLLED COPY WHEN DOWNLOADED OR PRINTED

Visit www.enstromhelicopter.com for instructions to order an original manual and to register for email notification of updates.

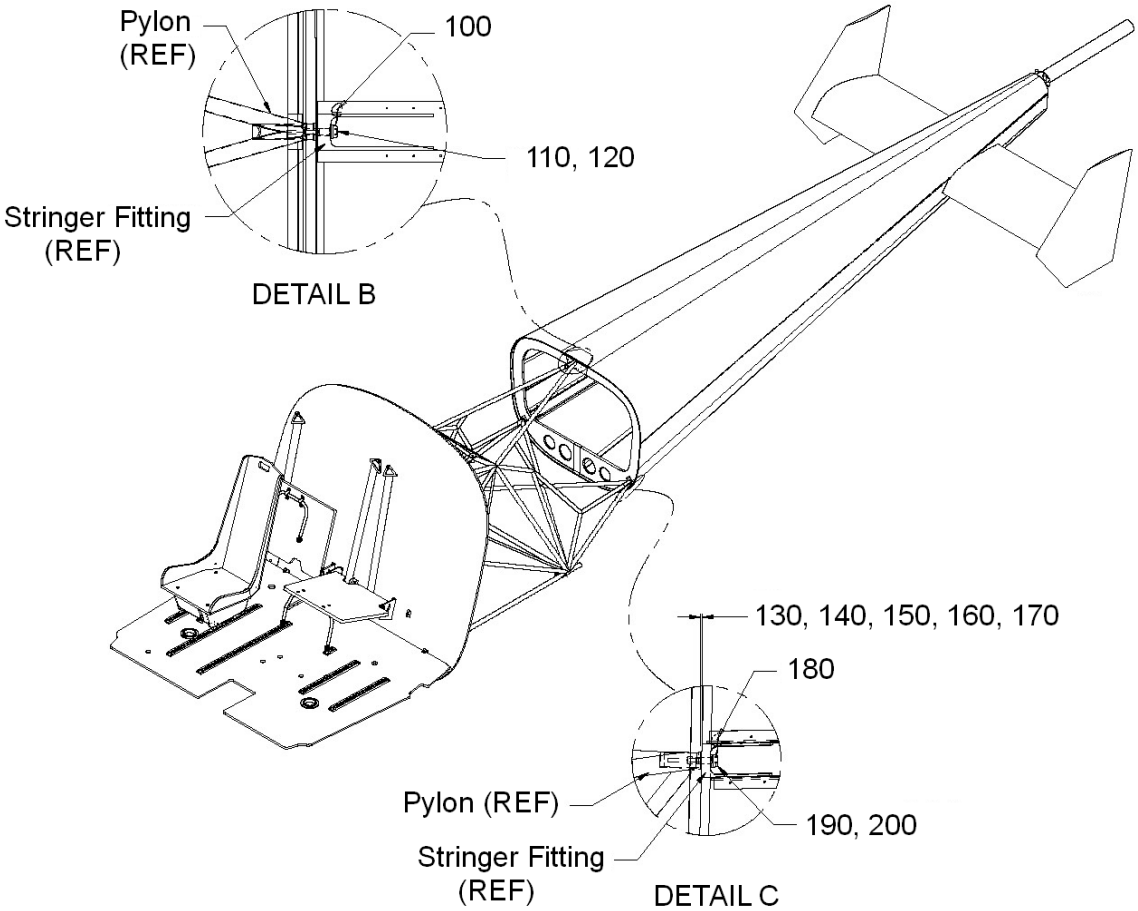

Sheet 1 of 3

FIGURE 3-1. STRUCTURAL ASSEMBLY

UNCONTROLLED COPY WHEN DOWNLOADED OR PRINTED

Visit www.enstromhelicopter.com for instructions to order an original manual and to register for email notification of updates.

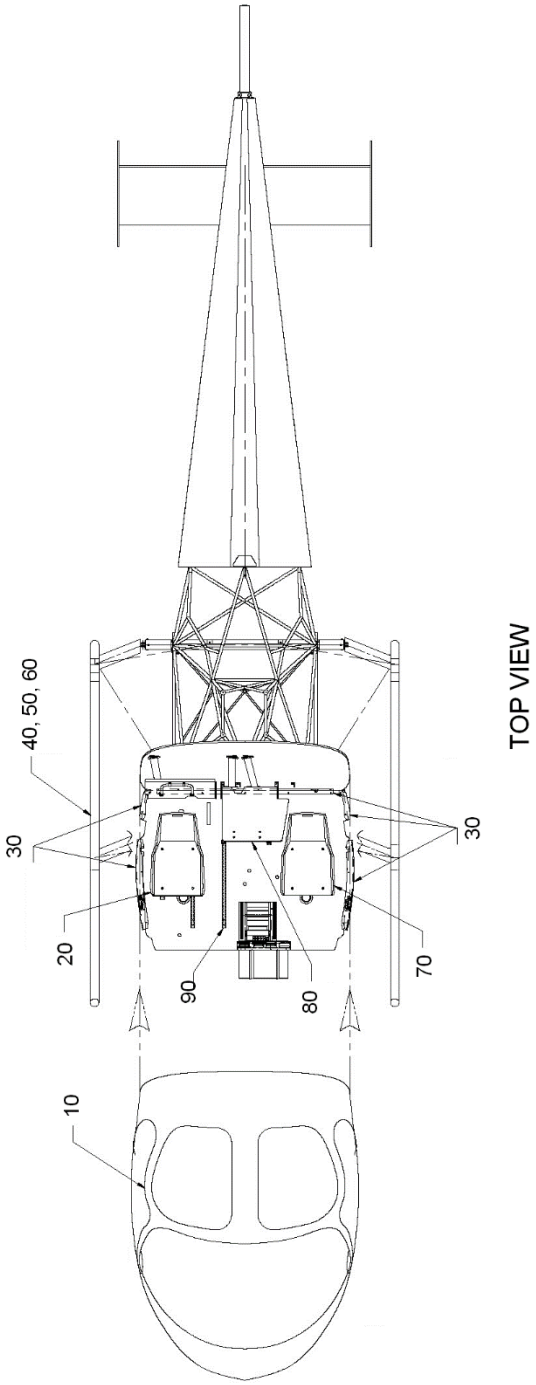

Sheet 2 of 3

FIGURE 3-1. STRUCTURAL ASSEMBLY

UNCONTROLLED COPY WHEN DOWNLOADED OR PRINTED

Visit www.enstromhelicopter.com for instructions to order an original manual and to register for email notification of updates.

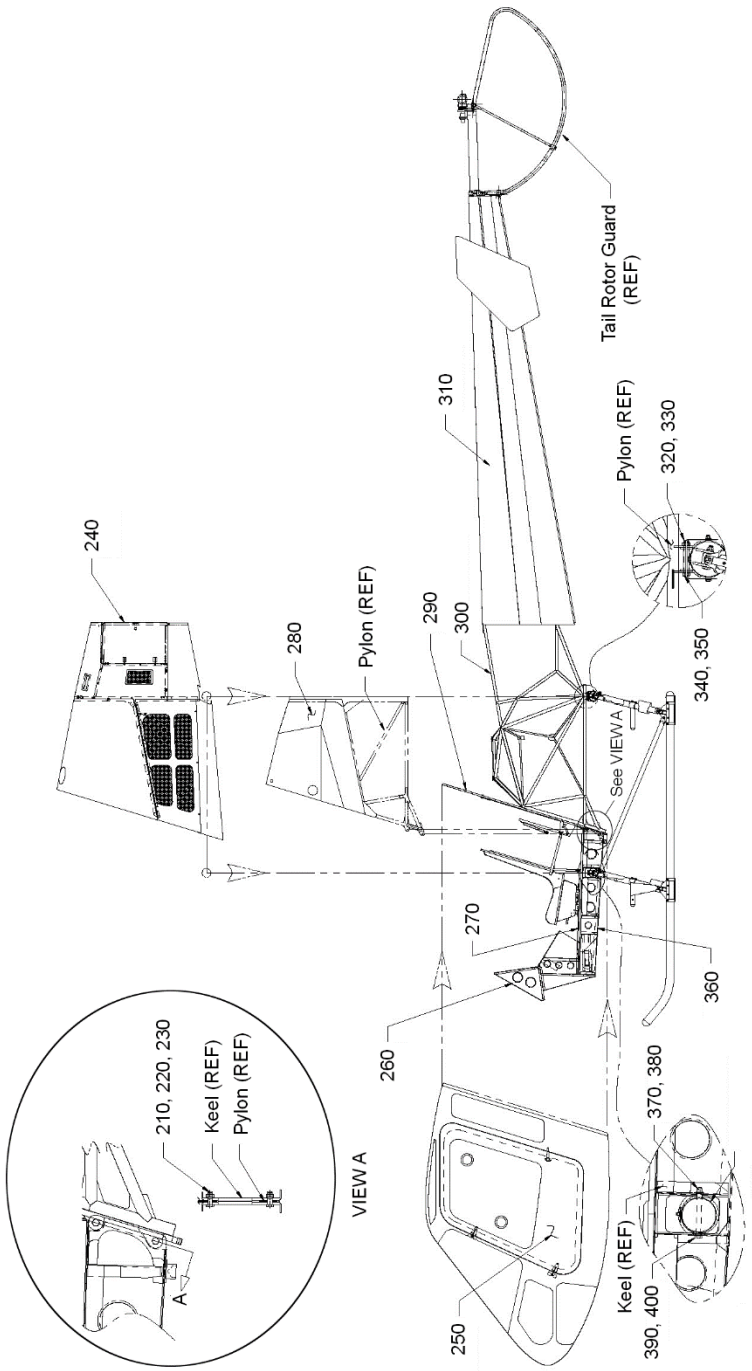

Sheet 3 of 3

FIGURE 3-1. STRUCTURAL ASSEMBLY

UNCONTROLLED COPY WHEN DOWNLOADED OR PRINTED

Visit www.enstromhelicopter.com for instructions to order an original manual and to register for email notification of updates.

FIGURE 3-1. STRUCTURAL ASSEMBLY

ITEM NUMBER	PART NUMBER	DESCRIPTION	QTY PER ASSY	EFFECTIVITY		
				TH-28	480	480B
–	4101501-3	Structural Assembly Complete	REF		X	X
10	4114023-901	. Cabin Installation	1	X	X	X
20	4119760-903	. Forward Seat Installation Copilot	1		X	X
30	4114030-3	. Closure Installation	1		X	X
40	4174000-9	. Fairing Installation	1	X	X	X
50	4174000-7	. . Skid Gear Installation	2		X	X
60	4174018-1	. . Landing Gear Fairing Installation	2	X	X	X
70	4119760-905	. Forward Seat Installation Pilot	1		X	X
80	4119775-103	. Bench Seat Installation	1		X	X
90	4119759-3	. Floor Track Installation	1		X	X
100	MS20995C32	. Safety Wire	A/R		X	X
110	NAS146DH-24	. Bolt	1		X	X
120	MS20002C6	. Washer	1		X	X
130	4112025-11	. Shim Tailcone	A/R		X	X
140	4112025-13	. Shim Tailcone	A/R		X	X
150	4112025-15	. Shim Tailcone	A/R		X	X
160	4112025-17	. Shim Tailcone	A/R		X	X
170	4112025-19	. Shim Tailcone	A/R		X	X
180	MS20995C32	. Safety Wire	A/R		X	X
190	NAS146DH-22	. Bolt	2		X	X
200	MS20002C6	. Washer	2		X	X
210	NAS1306-8	. Bolt	4		X	X
220	AN960-616	. Washer	12		X	X
230	MS21042-6	. Nut	6		X	X
240	4119350-902	. Cowl Installation	1	X	X	X
250	4118310-905	. Door Installation L/H	1		X	X
–	4118310-906	. Door Installation R/H	1		X	X
260	4182127-5	. Instrument Console Installation	1		X	X
270	4114020-1	. Floor Installation	1		X	X
280	4122061-5	. Fuel Bladder Structure Installation	1			X
290	4114018-1	. Cabin Bulkhead Installation	1	X	X	X
300	4110040-201	. Pylon Structure, 480B	1		X	X
310	4112000-903	. Tailcone Structure	1		X	X

UNCONTROLLED COPY WHEN DOWNLOADED OR PRINTED

Visit www.enstromhelicopter.com for instructions to order an original manual and to register for email notification of updates.

FIGURE 3-1. STRUCTURAL ASSEMBLY

ITEM NUMBER	PART NUMBER	DESCRIPTION	QTY PER ASSY	EFFECTIVITY		
				TH-28	480	480B
320	AN960-616	. Washer	12			X
330	AN364-624A	. Nut	2			X
340	28-17150-1	. Bolt Attach Frame Gear Landing	2			X
350	AN960-616	. Washer	12			X
360	4118850-900	. Keel Assembly	1			X
370	AN960-616	. Washer	12			X
380	MS21042-6	. Nut	6			X
390	NAS6206-58	. Bolt	2			X
400	AN960-616	. Washer	12			X
–	9080221	. Lubricant, Spray	A/R			X
–	9080331	. Anti-Seize Thread Compound	A/R			X
–	9080443	. Lubricant, Film, Solid	A/R			X

UNCONTROLLED COPY WHEN DOWNLOADED OR PRINTED

Visit www.enstromhelicopter.com for instructions to order an original manual and to register for email notification of updates.

INTENTIONALLY LEFT BLANK

UNCONTROLLED COPY WHEN DOWNLOADED OR PRINTED

Visit www.enstromhelicopter.com for instructions to order an original manual and to register for email notification of updates.

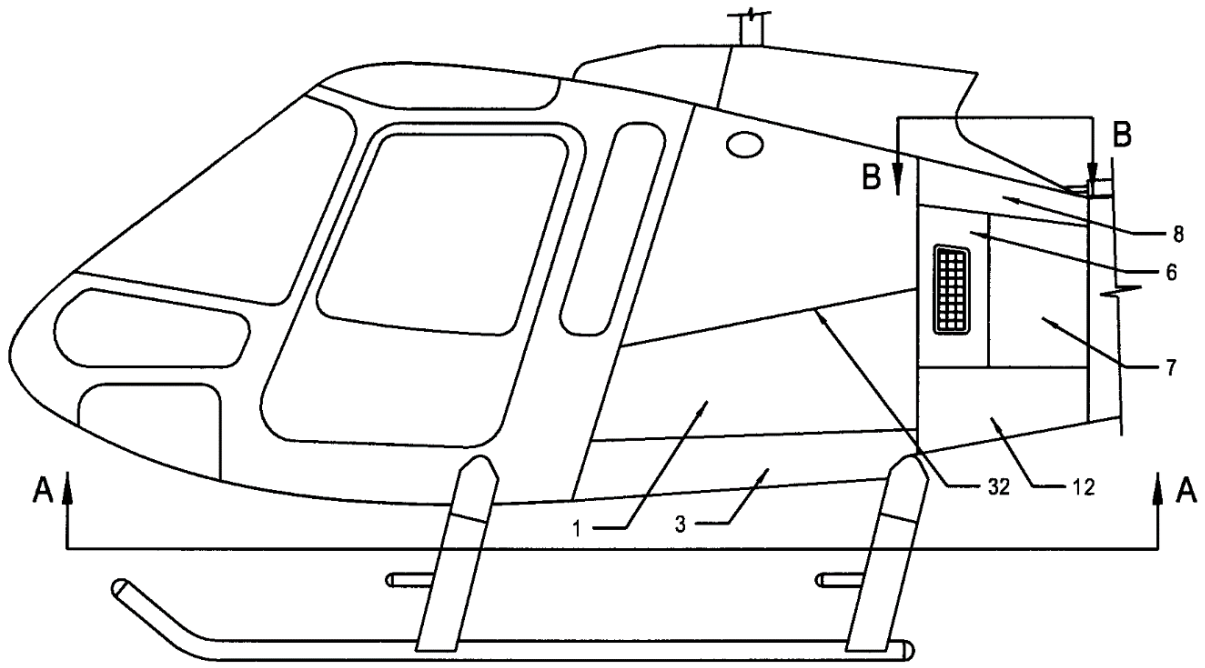

LEFT SIDE

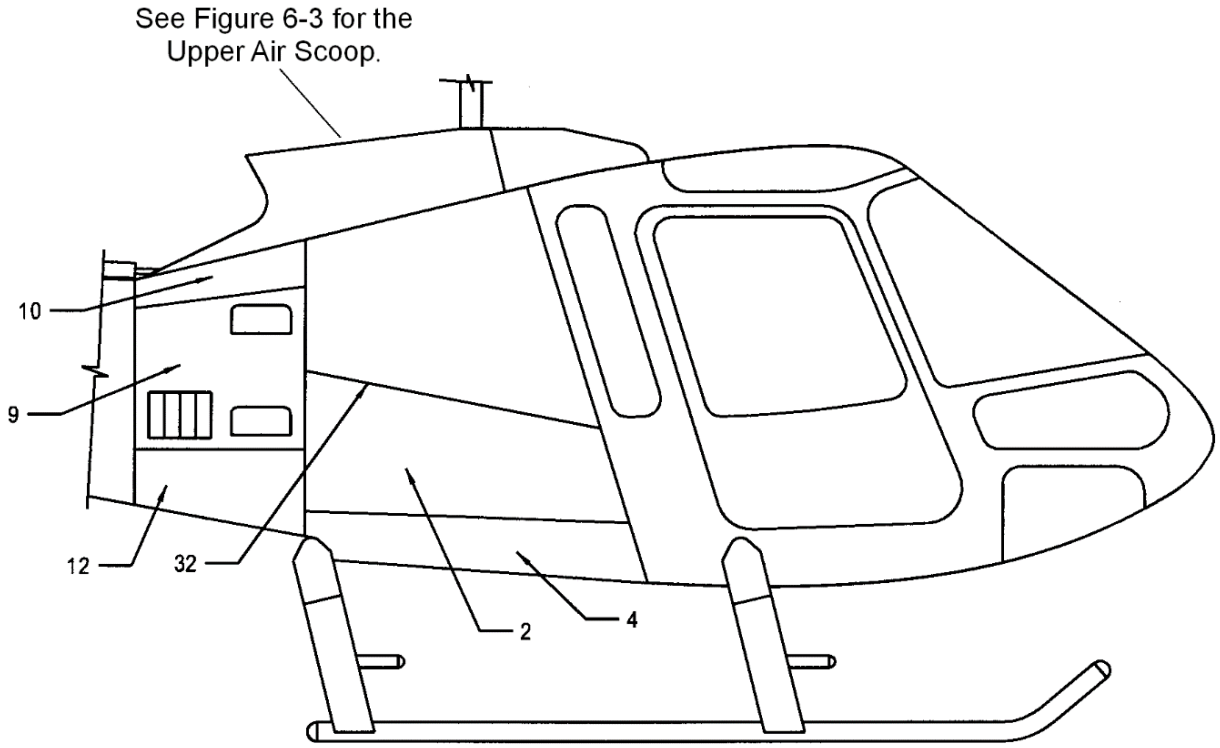

RIGHT SIDE

Sheet 1 of 2

FIGURE 3-2. COWLING AND ACCESS PANELS

UNCONTROLLED COPY WHEN DOWNLOADED OR PRINTED

Visit www.enstromhelicopter.com for instructions to order an original manual and to register for email notification of updates.

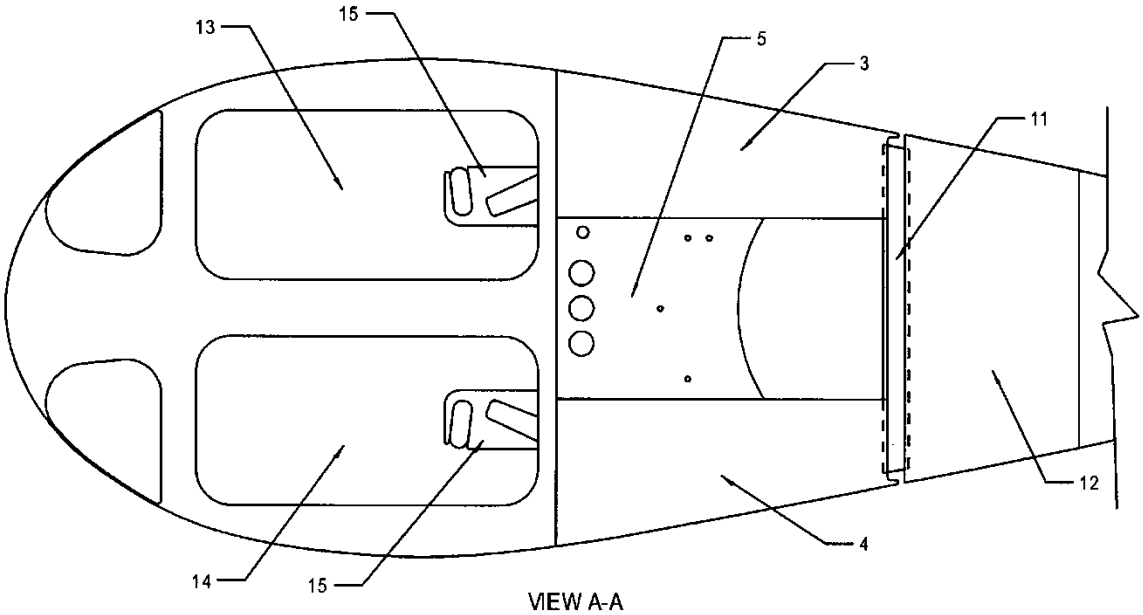

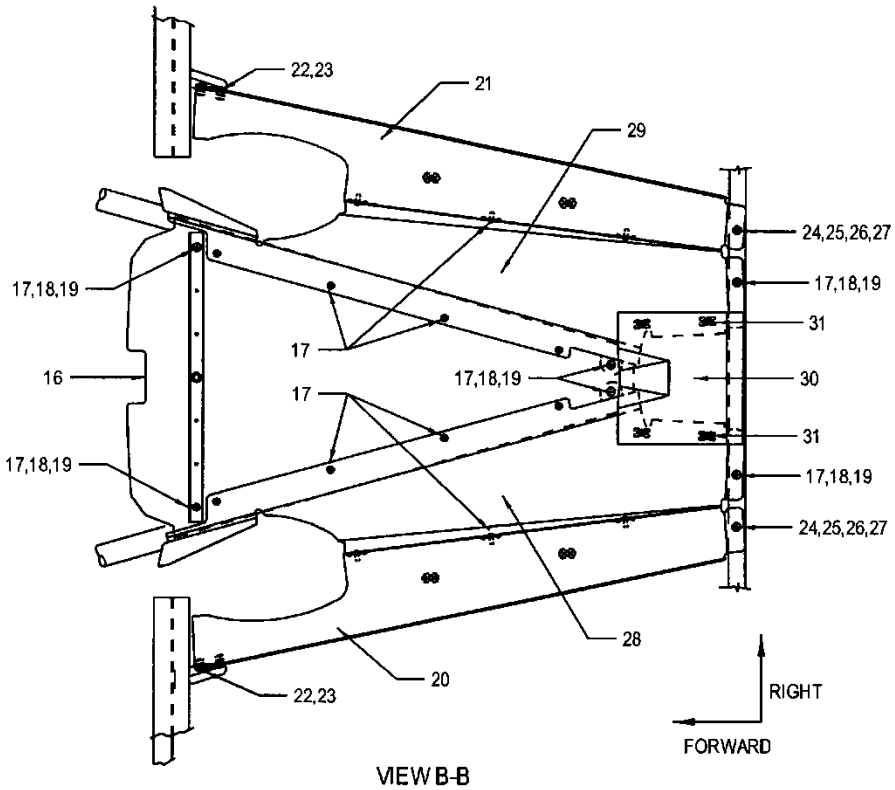

Sheet 2 of 2

FIGURE 3-2. COWLING AND ACCESS PANELS

UNCONTROLLED COPY WHEN DOWNLOADED OR PRINTED

Visit www.enstromhelicopter.com for instructions to order an original manual and to register for email notification of updates.

FIGURE 3-2. COWLING AND ACCESS PANELS

ITEM NUMBER	PART NUMBER	DESCRIPTION	QTY PER ASSY	EFFECTIVITY		
				TH-28	480	480B
1	4119334-3	. Cowling Door, L/H	1	X	X	X
–	85-12-140-16	. . Wing Stud Fastener	3	X	X	X
–♦	85-12-140-20	. . Wing Stud Fastener (Acceptable Alternate)	3	X	X	X
–	85-46-101-39	. . Washer, Nylon	3	X	X	X
–	85-34-101-20	. . Split Ring	3	X	X	X
1♦♦	4220150-5	. Cowling Door, L/H	1			X
1**	4220150-3	. Cowling Door, L/H (Superseded by 4220150-5)	1			X
–	85-12-140-16	. . Wing Stud Fastener	3			X
–♦	85-12-140-20	. . Wing Stud Fastener (Acceptable Alternate)	3			X
–	85-46-101-39	. . Washer, Nylon	3			X
–	85-34-101-20	. . Split Ring	3			X
2	4119334-4	. Cowling Door, R/H	1	X	X	X
–	85-12-140-16	. . Wing Stud Fastener	3	X	X	X
–♦	85-12-140-20	. . Wing Stud Fastener (Acceptable Alternate)	3	X	X	X
–	85-46-101-39	. . Washer, Nylon	3	X	X	X
–	85-34-101-20	. . Split Ring	3	X	X	X
2♦♦	4220150-6	. Cowling Door, R/H	1			X
2**	4220150-4	. Cowling Door, R/H (Superseded by 4220150-6)	1			X
–	85-12-140-16	. . Wing Stud Fastener	3			X
–♦	85-12-140-20	. . Wing Stud Fastener (Acceptable Alternate)	3			X
–	85-46-101-39	. . Washer, Nylon	3			X
–	85-34-101-20	. . Split Ring	3			X
3●	4119356-3	. Quarter Panel Cowling, L/H	1			X
3†	4119329-3	. Quarter Panel Cowling, L/H (Alternate to 4119356-3)	1	X	X	X
–††	MS35489-14	. . Grommet	1			X
–††	MS35489-17	. . Grommet	3			X
–††	MS35489-20	. . Grommet	1			X
–††	MS35489-10	. . Grommet	2	X	X	X
–††	AN931-5-12	. . Grommet (Superseded by MS35489-10)	2	X	X	X
–	85-35-295-15	. . Spring Leaf Receptacle	3	X	X	X
–	MS20426AD3-4	. . Rivet	6	X	X	X
–●	S8P150	. . PlusNut	4			X
–	A06195-8Z-1D	. . Nut, Tinnerman (Superseded by S8P150)	4	X	X	X
–●	AN5158R10	. . Screw	4			X

UNCONTROLLED COPY WHEN DOWNLOADED OR PRINTED

Visit www.enstromhelicopter.com for instructions to order an original manual and to register for email notification of updates.

FIGURE 3-2. COWLING AND ACCESS PANELS

ITEM NUMBER	PART NUMBER	DESCRIPTION	QTY PER ASSY	EFFECTIVITY		
				TH-28	480	480B
–●	AN960-8L	. . Washer	4			X
–	CCR-264-SS-3-3	. . Rivet (Removed)	8	X	X	X
–●	4119328-13	. . Bracket Attach LH Quarter Panel	1			X
–●	4119328-15	. . Bracket Attach LH Quarter Panel	1			X
4●	4119356-4	. Quarter Panel Cowling, R/H	1			X
4†	4119329-4	. Quarter Panel Cowling, R/H (Superseded by 4119356-4)	1	X	X	X
–●	MS35489-14	. . Grommet	1			X
–●	MS35489-17	. . Grommet	2			X
–	AN931-5-12	. . Grommet (Removed)	1	X	X	X
–	85-35-295-15	. . Spring Leaf Receptacle	3	X	X	X
–	MS20426AD3-4	. . Rivet	6	X	X	X
–●	S8P150	. . PlusNut	4			X
–	A06195-8Z-1D	. . Nut, Tinnerman (Superseded by S8P150)	4	X	X	X
–●	AN5158R10	. . Screw	4			X
–●	AN960-8L	. . Washer	4			X
–●	CCR-264-SS-3-3	. . Rivet (Removed)	8	X	X	X
–●	4119328-14	. . Bracket Attach RH Quarter Panel	1			X
–●	4119328-16	. . Bracket Attach RH Quarter Panel	1			X
5	4119329-5	. . Panel Cowling, Lower Center	1	X	X	X
–	S8P150	. . PlusNut, Flathead, 8-32 X 0.656"	10	X	X	X
–	A06195-8Z-1D	. . Nut, Tinnerman (Superseded By S8P150)	10	X	X	X
–	MS20426AD3-3	. . Rivet, Solid, 3/32" X 3/16"	20	X	X	X
–	MS35489-10	. . Grommet, Rubber, .312" (.750")	4	X	X	X
–	MS35206-246	. . Screw, Machine (Rh), 8-32 X 0.625"	2		X	X
–	4119327-1	. . Skin Assembly	1		X	X
–	4119327-13	. . Doubler	1		X	X
–	4119327-14	. . Doubler	1		X	X
–	4119355-11	. . Stiffener Lower Cowl	1		X	X
5‡	4119327-3	. Panel Cowling, Lower Center	1			X
–●	S8P150	. . PlusNut	11			X
–	A06195-8Z-1D	. . Nut, Tinnerman (Superseded by S8P150)	8			X
–	CCR-264-SS-3-3	. . Rivet (Removed)	16			X
–●	AN5158R10	. . Screw	11			X
–●	AN960-8L	. . Washer	11			X
–●	MS35489-10	. Grommet	1			X

UNCONTROLLED COPY WHEN DOWNLOADED OR PRINTED

Visit www.enstromhelicopter.com for instructions to order an original manual and to register for email notification of updates.

FIGURE 3-2. COWLING AND ACCESS PANELS

ITEM NUMBER	PART NUMBER	DESCRIPTION	QTY PER ASSY	EFFECTIVITY		
				TH-28	480	480B
–	AN931-5-12	. Grommet (Superseded by MS35489-10)	1			X
–	MS27039-1-08	. Screw (Removed)	9	X	X	X
–	AN960D10L	. Washer (Removed)	9	X	X	X
–	AN530-8R8	. Screw (Removed)	18	X	X	X
–●	8X1/2	. Screw	8			X
–	4516	. Vinyl Foam Tape	A/R			X
6	4119344-901	. Panel Assembly, Oil Cooler Inlet	1	X	X	X
–	AJ4-30	. . Dzus Fastener	3	X	X	X
–	AJ4-35	. . Dzus Fastener	5	X	X	X
–	GA4-250	. . Fastener Collar	8	X	X	X
7	4119366-1	. Baggage Door Assembly (Used with 4119344-905)	1	X	X	X
7	4119358-3	. Baggage Door Assembly (Used with 4119344-903)	1	X	X	X
–	AN393-9	. Pin	2	X	X	X
–	AN960D10L	. Washer	2	X	X	X
–	MS24665-151	. Cotter Pin	2	X	X	X
8	4119344-905	. Quarter Panel, Top Left (Used with 4119358-5)	1	X	X	X
– ‡‡	4119351-19	. . Hand Hold, Cowl	1		X	X
– ‡‡	4119351-13	. . Hand Hold, Cowl (Superseded by 4119351-19)	1		X	X
– ≡	1219-4200-Z3Y	. . Spring, Stud Fastener	2	X	X	X
– ≡Δ	MS20426AD3-4	. . Rivet	4	X	X	X
–	AJ4-35	. . Dzus Fastener,1/4 Turn	2	X	X	X
–	GA4-250	. . Fastener Collar	2	X	X	X
–	82-19-160-16	. . Stud	1	X	X	X
–	82-46-101-39	. . Washer, Nylon	1	X	X	X
–	82-32-101-20	. . Retainer, Ring, Split	1	X	X	X
8	4119344-903	. Quarter Panel, Top Left (Used with 4119366-1)	1	X	X	X
– ‡‡	4119351-19	. . Hand Hold, Cowl	1		X	X
– ‡‡	4119351-13	. . Hand Hold, Cowl (Superseded by 4119351-19)	1		X	X
– ≡	1219-4200-Z3Y	. . Spring, Stud Fastener	2	X	X	X
– ≡Δ	MS20426AD3-4	. . Rivet	4	X	X	X
–	AJ4-35	. . Dzus Fastener,1/4 Turn	2	X	X	X
–	GA4-250	. . Fastener Collar	2	X	X	X

UNCONTROLLED COPY WHEN DOWNLOADED OR PRINTED

Visit www.enstromhelicopter.com for instructions to order an original manual and to register for email notification of updates.

FIGURE 3-2. COWLING AND ACCESS PANELS

ITEM NUMBER	PART NUMBER	DESCRIPTION	QTY PER ASSY	EFFECTIVITY		
				TH-28	480	480B
–	82-19-160-16	. . Stud	1	X	X	X
–	82-46-101-39	. . Washer, Nylon	1	X	X	X
–	82-32-101-20	. . Retainer, Ring, Split	1	X	X	X
–	MS35206-245	. Screw	2	X	X	X
–	NAS1149FN816P	. Washer	2	X	X	X
–	AN960-8L	. Washer (Superseded by NAS1149FN816P)	2	X	X	X
9*	4119357-902	. Step Cowl Assembly	1	X	X	X
–	AJ4-30	. . Dzus Fastener	2	X	X	X
–	AJ4-35	. . Dzus Fastener	13	X	X	X
–	AJ4-40	. . Dzus Fastener	4	X	X	X
–	GA4-250	. . Fastener Collar	19	X	X	X
–	4119319-3	. . Step Door Assembly (Upper)	1	X	X	X
–	4119319-7	. . Step Door Assembly (Lower)	1	X	X	X
–	MS20470AD4-4	. . Rivet	12	X	X	X
–	4119343-11	. . Louver	3	X	X	X
–	4119343-13	. . Louver	1	X	X	X
– ●●	MS20470A3-4	. . Rivet	20	X	X	X
–	MS20470A3-3	. . Rivet (Superseded by MS20470A3-4)	20	X	X	X
9‡	4119357-1	. Step Cowl Assembly	1			X
–	AJ4-30	. . Dzus Fastener	2			X
–	AJ4-35	. . Dzus Fastener	13			X
–	AJ4-40	. . Dzus Fastener	4			X
–	GA4-250	. . Fastener Collar	19			X
–	4119319-3	. . Step Door Assembly (Upper)	1			X
–	4119319-13	. . . Door - Top	1			X
–	4119345-5	. . . Hinge Assembly	1			X
–	4119345-15	. . . . Hinge	1			X
–	28-12319-1	. . . . Spring	2			X
–	MS20426AD4-4	. . . Rivet	6			X
–	4119319-7	. . Step Door Assembly (Lower)	1			X
–	4119319-17	. . . Door - Lower	1			X
–	4119345-5	. . . Hinge Assembly	1			X
–	4119345-15	. . . . Hinge	1			X
–	28-12319-1	. . . . Spring	2			X
–	MS20426AD4-4	. . . Rivet	6			X
–	MS20470AD4-4	. . Rivet	12			X

UNCONTROLLED COPY WHEN DOWNLOADED OR PRINTED

Visit www.enstromhelicopter.com for instructions to order an original manual and to register for email notification of updates.

FIGURE 3-2. COWLING AND ACCESS PANELS

ITEM NUMBER	PART NUMBER	DESCRIPTION	QTY PER ASSY	EFFECTIVITY		
				TH-28	480	480B
–	4119357-13	. . Bezel	1			X
–	MS20470A3-4	. . Rivet	14			X
–	NAS1149FN316P	. . Washer	A/R			X
10	4119345-902	. Quarter Panel, Top Right	1	X	X	X
– ‡‡	4119351-19	. . Hand Hold, Cowl	1		X	X
– ‡‡	4119351-13	. . Hand Hold, Cowl (Superseded by 4119351-19)	1		X	X
–	1219-4200-Z3Y	. . Spring, Stud Fastener	5	X	X	X
– Δ	MS20426AD3-4	. . Rivet	10	X	X	X
–●●	AJ4-35	. . Dzus Fastener, 1/4 Turn	2	X	X	X
–	GA4-250	. . Fastener Collar	2	X	X	X
–	82-19-160-16	. . Stud Fastener, Recessed	1	X	X	X
–	82-46-101-39	. . Washer, Nylon	1	X	X	X
–	82-32-101-20	. . Retainer, Ring, Split	1	X	X	X
–	MS35206-245	. Screw	2	X	X	X
–●●	NAS1149FN816P	. Washer	2	X	X	X
–	AN960-8L	. Washer (Superseded by NAS1149FN816P)	2	X	X	X
11	280-114508-11	. Cowl Support	1	X	X	X
–	A06195-8Z-1D	. . Nut, Tinnerman	17	X	X	X
–	MS21078-3	. . Nut Plate	2	X	X	X
–	NAJ1-02BC	. . Nut Plate (Superseded by MS21078-3)	2	X	X	X
–	MS20426AD3-3	. . Rivet	38	X	X	X
–	AN530-8R8	. Screw	3	X	X	X
–	8X1/2	. Screw (Alternate for AN530-8R8)	3	X	X	X
–	AN525-10R10	. Screw	2	X	X	X
12†	4119348-901	. Cowl Assembly, Lower	1	X	X	X
–	1219-4200-Z3Y	. . Spring, Stud Fastener	8	X	X	X
– Δ	MS20426AD3-4	. . Rivet	16	X	X	X
–	4119352-13	. . Clip	1	X	X	X
–	4119352-15	. . Clip	1	X	X	X
–	4119352-16	. . Clip	1	X	X	X
–	MS20470AD4-4	. . Rivet	9	X	X	X
–	4516-75	. . Foam Tape	A/R	X	X	X
–	AN531-8R8	. Screw	4	X	X	X
–	AN530-8R8	. Screw	11	X	X	X
–	8X1/2	. Screw (Alternate for AN530-8R8)	11	X	X	X
–	MS35206-245	. Screw	6	X	X	X

UNCONTROLLED COPY WHEN DOWNLOADED OR PRINTED

Visit www.enstromhelicopter.com for instructions to order an original manual and to register for email notification of updates.

FIGURE 3-2. COWLING AND ACCESS PANELS

ITEM NUMBER	PART NUMBER	DESCRIPTION	QTY PER ASSY	EFFECTIVITY		
				TH-28	480	480B
–	AN960-8L	. Washer	6	X	X	X
13	4114029-1	. Access Panel (L/H)	1	X	X	X
13	4114026-3	. Access Panel (L/H) (Obsolete, replaced by 4114029-1)	1	X	X	X
14	4114029-2	. Access Panel (R/H)	1	X	X	X
14	4114026-4	. Access Panel (R/H) (Obsolete, replaced by 4114029-2)	1	X	X	X
15	4114010-11	. Cover	2	X	X	X
–	AN530-8R8	. Screw	44	X	X	X
–	8X1/2	. Screw (Alternate for AN530-8R8)	44	X	X	X
– ≡	A01787-8Z-1D	. Nut, Tinnerman	44	X	X	X
– ≡	A01789-8Z-1D	. Nut, Tinnerman (Alternate for A01787-8Z1D)	44	X	X	X
16	4119316-903	. Exit Duct Cone	1	X	X	X
–	4119316	. . Exit Duct and Cowl Support/Installation	ref		X	X
–	A06195-8Z-1D	. . Nut, Tinnerman	8	X	X	X
–	CCR-264-SS-3-3	. . Rivet	16	X	X	X
–	4119364-13	. . Drain Tube	1	X	X	X
–	4119365-13	. . Rolled Angle	1	X	X	X
–	MS20470AD4-3	. . Rivet	4	X	X	X
17	AN530-8R8	. Screw	20	X	X	X
17	8X1/2	. Screw (Alternate for AN530-8R8)	20	X	X	X
18	A06195-8Z-1D	. Nut, Tinnerman	6	X	X	X
19	CCR-264-SS-3-3	. Rivet	12	X	X	X
20	4119316-5	. Channel Assembly (Left Side)	1	X	X	X
–	A06195-8Z-1D	. . Nut, Tinnerman	3	X	X	X
–●●	MS21080-08K	. . Nut Plate	2	X	X	X
–	NAS1068A3	. . Nut Plate (Superseded by MS21080-08K)	2	X	X	X
– ≡	CCR264-3-03	. . Rivet	10	X	X	X
21	4119316-6	. Channel Assembly (Right Side)	1	X	X	X
–	A06195-8Z-1D	. . Nut, Tinnerman	3	X	X	X
–●●	MS21080-08K	. . Nut Plate	2	X	X	X
–	NAS1068A3	. . Nut Plate (Superseded by MS21080-08K)	2	X	X	X
– ≡	CCR264-3-03	. . Rivet	10	X	X	X
22	MS27039-0808	. Screw	4	X	X	X
23	AN960D8	. Washer	4	X	X	X
24	MS27039-1-08	. Screw	2	X	X	X

UNCONTROLLED COPY WHEN DOWNLOADED OR PRINTED

Visit www.enstromhelicopter.com for instructions to order an original manual and to register for email notification of updates.

FIGURE 3-2. COWLING AND ACCESS PANELS

ITEM NUMBER	PART NUMBER	DESCRIPTION	QTY PER ASSY	EFFECTIVITY		
				TH-28	480	480B
25	AN960D10L	. Washer	2	X	X	X
26	NAS1068A3	. Nut Plate	2	X	X	X
27	CCR-264-SS-3-3	. Rivet	4	X	X	X
28	4119315-3	. Duct Assembly (Left Side)	1	X	X	X
–	NAS686A08K	. . Nut Plate	2	X	X	X
–	MS20426AD3-3	. . Rivet	4	X	X	X
29	4119315-4	. Duct Assembly (Right Side)	1	X	X	X
–	NAS686A08K	. . Nut Plate	2	X	X	X
–	MS20426AD3-3	. . Rivet	4	X	X	X
30	4119361-13	. Closeout	1	X	X	X
31	AN525-832R10	. Screw	4	X	X	X
32	MS20253-P2	. Hinge Pin, 42 inches	2	X	X	X

* Early production TH-28s and 480s had a two piece step/oil cooler exit access panel. Contact Enstrom Customer Service for part number information.

** Part of the Increased Cooling Kit, P/N 4230031, which increases the ambient temperature operating limitations. Eligible for installation on 480B, S/N 5089 and subsequent.

† These assemblies are installed on the 480B, S/N 5114 and subsequent, and are equipped with additional cooling holes. Assemblies with additional cooling holes are part of the Increased Cooling Kit, P/N 4230031, for 480B, S/N 5089 through 5113, and are eligible for installation on all TH-28, 480, and 480B aircraft.

‡ Installed on 480B, S/N 5114 and subsequent. Part of the Increased Cooling Kit, P/N 4230031, for 480B, S/N 5089 through 5113.

≡ See Appendix A for equivalent part information.

● Effectivity 480B S/N 5148 and subsequent. Retrofittable to 480 S/N 5001 subsequent, and 480B S/N 5042 subsequent.

●● Effectivity 480B S/N 5155 and subsequent. Eligibility 480 S/N 5001, 480B S/N 5042 and subsequent.

†† Effectivity 480B S/N 5161 and subsequent. Eligibility 480 S/N 5001, 480B S/N 5042 and subsequent.

‡‡ Effectivity 480B S/N 5164 and subsequent. Retrofittable to 480 S/N 5001 to 5041 and 480B S/N 5042 and subsequent.

♦ The 85-12-140-20 Wing Stud Fastener is an acceptable alternate to the 58-12-140-16 Wing Stud Fastener when unpainted.

♦♦ Replaces previous 4220150 Cowling Doors for the Increased Cooling Kit. Effectivity 480B S/N 5207 and subsequent. Retrofittable to 480 S/N 5001 and subsequent, and 480B S/N 5042 and subsequent.

▌ Δ CCR264SS-3-03 rivet with NAS1149FN316P is an acceptable alternate.

UNCONTROLLED COPY WHEN DOWNLOADED OR PRINTED

Visit www.enstromhelicopter.com for instructions to order an original manual and to register for email notification of updates.

INTENTIONALLY LEFT BLANK

UNCONTROLLED COPY WHEN DOWNLOADED OR PRINTED

Visit www.enstromhelicopter.com for instructions to order an original manual and to register for email notification of updates.

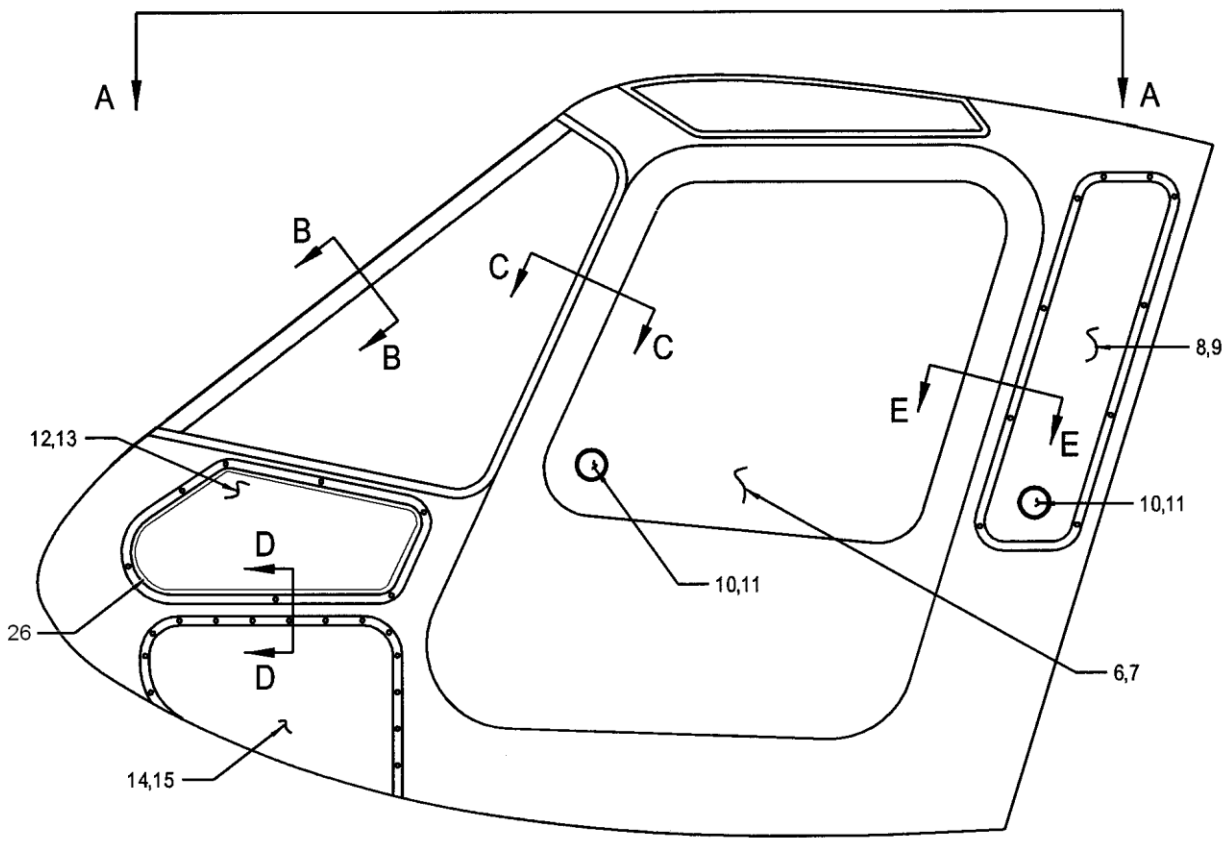

LOOKING FROM LEFT

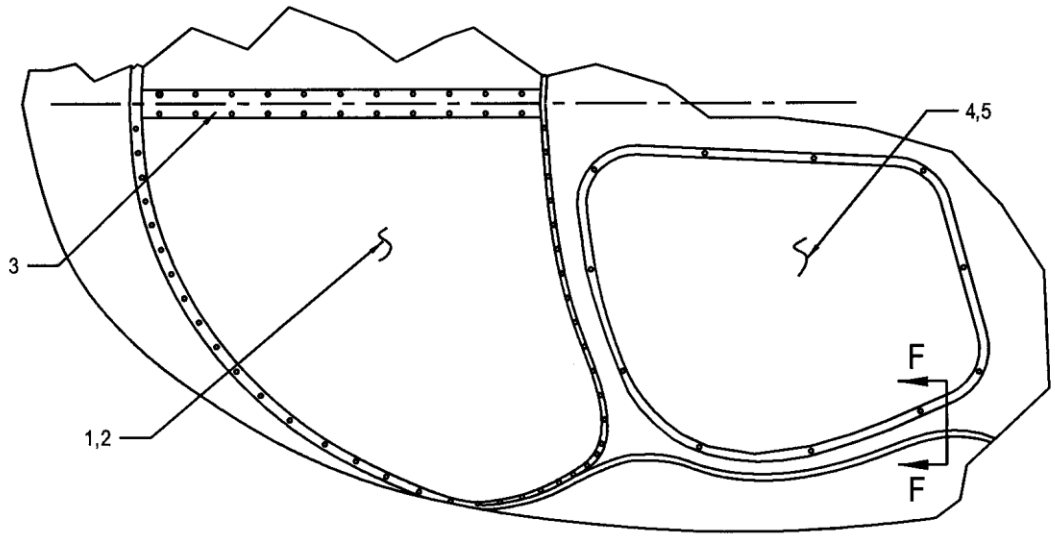

VIEW A-A

Sheet 1 of 3

FIGURE 3-3. WINDSHIELD AND WINDOW INSTALLATION

UNCONTROLLED COPY WHEN DOWNLOADED OR PRINTED

Visit www.enstromhelicopter.com for instructions to order an original manual and to register for email notification of updates.

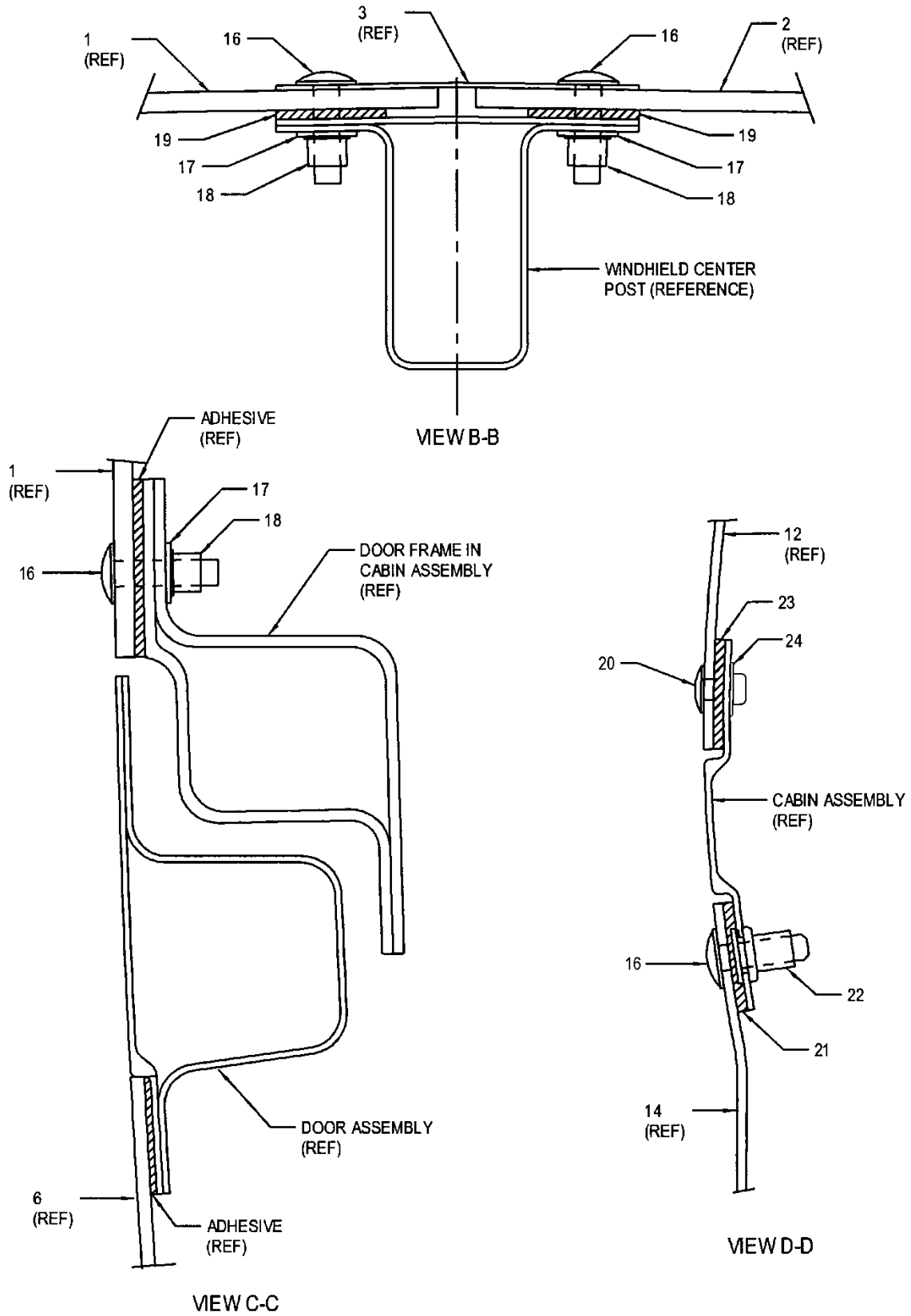

Sheet 2 of 3

FIGURE 3-3. WINDSHIELD AND WINDOW INSTALLATION

UNCONTROLLED COPY WHEN DOWNLOADED OR PRINTED

Visit www.enstromhelicopter.com for instructions to order an original manual and to register for email notification of updates.

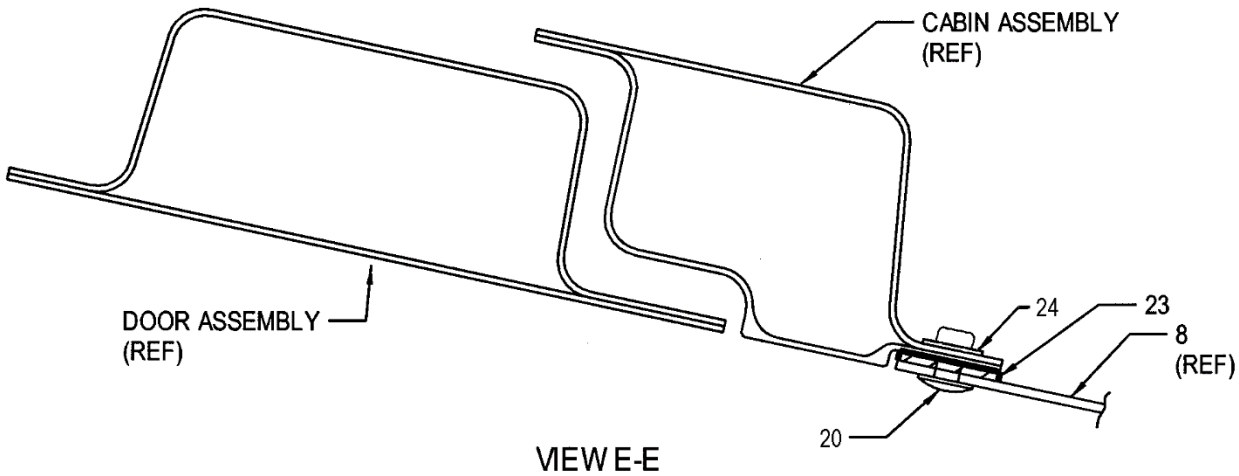

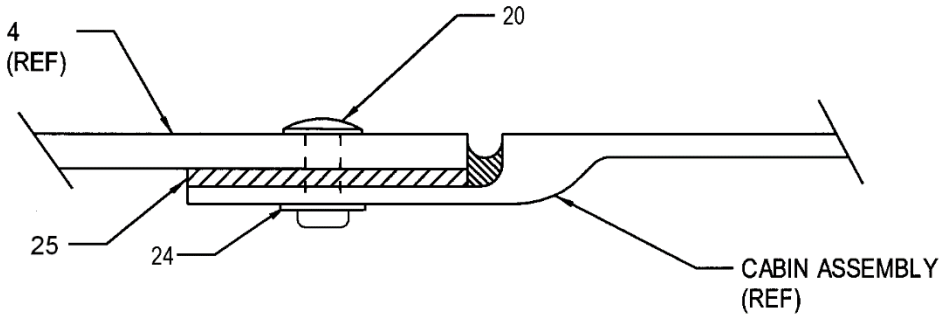

Sheet 3 of 3

FIGURE 3-3. WINDSHIELD AND WINDOW INSTALLATION

UNCONTROLLED COPY WHEN DOWNLOADED OR PRINTED

Visit www.enstromhelicopter.com for instructions to order an original manual and to register for email notification of updates.

FIGURE 3-3. WINDSHIELD AND WINDOW INSTALLATION

ITEM NUMBER	PART NUMBER	DESCRIPTION	QTY PER ASSY	EFFECTIVITY		
				TH-28	480	480B
1	4114002-29	. Windshield (Left Side)	1	X	X	X
2	4114002-30	. Windshield (Right Side)	1	X	X	X
3	4118255-39	. Cover Strip	1	X	X	X
4	4114002-23	. Overhead Window (Left Side)	1	X	X	X
5	4114002-24	. Overhead Window (Right Side)	1	X	X	X
6	4114002-21	. Door Window (Left Side)	1	X	X	X
7	4114002-22	. Door Window (Right Side)	1	X	X	X
8	4114002-919	. Opera Window (Left Side)	1	X	X	X
9	4114002-920	. Opera Window (Right Side)	1	X	X	X
10	28-11715-11	. . Doubler Ring	4	X	X	X
11	CC-3251	. Snap Vent	4	X	X	X
12	4114002-13	. Cheek Window (Left Side)	1	X	X	X
13	4114002-14	. Cheek Window (Right Side)	1	X	X	X
14	4114002-31	. Chin Window (Left Side)	1	X	X	X
15	4114002-32	. Chin Window (Right Side)	1	X	X	X
16*	AN525-832R8	. Screw	118	X	X	X
–	AN525-832R10	. Screw	4	X	X	X
17†	AN960-8L	. Washer	72	X	X	X
17*	AN960D8L	. Washer (Superseded by AN960-8L)	72	X	X	X
18*	MS21042-08	. Nut	72	X	X	X
18*	AN364-832A	. Nut (Alternate)	72	X	X	X
19	PR1425B1/2	. Sealant: Windshield and Window	A/R	X	X	X
19	4016-1	. Foam Tape (Superseded by PR1425B1/2 Sealant)	A/R	X	X	X
20**	AD4( )BSLF	. Rivet	A/R	X	X	X
20	MS20604AD4W( )	. Rivet (Superseded by AD4( )BSLF)	A/R	X	X	X
–††	AN960-4L	. Washer	A/R	X	X	X
20**	CR91484-4-( )	. Rivet (Superseded by AD4( )BSLF)	A/R	X	X	X
21	4516-75	. Foam Tape	A/R	X	X	X
22	A8P150	. Plus Nut	50	X	X	X
22	S8P150	. Plus Nut (Alternate)	50	X	X	X
23	PR1425B1/2	. Sealant	A/R	X	X	X
23*	4941	. Foam Tape, VHB (Superseded by PR1425B1/2 Sealant)	A/R	X	X	X
24	AN960-4L	. Washer	96	X	X	X
–†	102	. Caulk: Adhesive	A/R	X	X	X
–†	732-RTV	. Sealant: Rubber, Clear Silicone	1	X	X	X

UNCONTROLLED COPY WHEN DOWNLOADED OR PRINTED

Visit www.enstromhelicopter.com for instructions to order an original manual and to register for email notification of updates.

FIGURE 3-3. WINDSHIELD AND WINDOW INSTALLATION

ITEM NUMBER	PART NUMBER	DESCRIPTION	QTY PER ASSY	EFFECTIVITY		
				TH-28	480	480B
25†	PR1425B1/2	. Sealant: Windshield and Window	1	X	X	X
–†	PR1425B2	. Sealant: Windshield and Window (Alternate)	1	X	X	X
26●	70-0160-1056-6	. Tape: Film,1/4” Black Plastic	A/R	X	X	X

* Prior to 480B, S/N 5067, the windows were bonded to the cabin structure with adhesive. Replacement windows for these aircraft may be installed using either the adhesive installation or the foam tape and hardware installation.

** Rivet length as required (CR91484-4-03, -04, or -05; or AD43BSLF, AD44BSLF, or AD45BSLF, as applicable).

† Apply to exterior centerline void between 4114002-29 and 4114002-30 windshields and apply to interior centerline doubler edges.

● Use to trim out all windows.

†† MS20604AD4W( ) series rivets are non-truss head rivets and require washers under the head and tail.

UNCONTROLLED COPY WHEN DOWNLOADED OR PRINTED

Visit www.enstromhelicopter.com for instructions to order an original manual and to register for email notification of updates.

INTENTIONALLY LEFT BLANK

UNCONTROLLED COPY WHEN DOWNLOADED OR PRINTED

Visit www.enstromhelicopter.com for instructions to order an original manual and to register for email notification of updates.

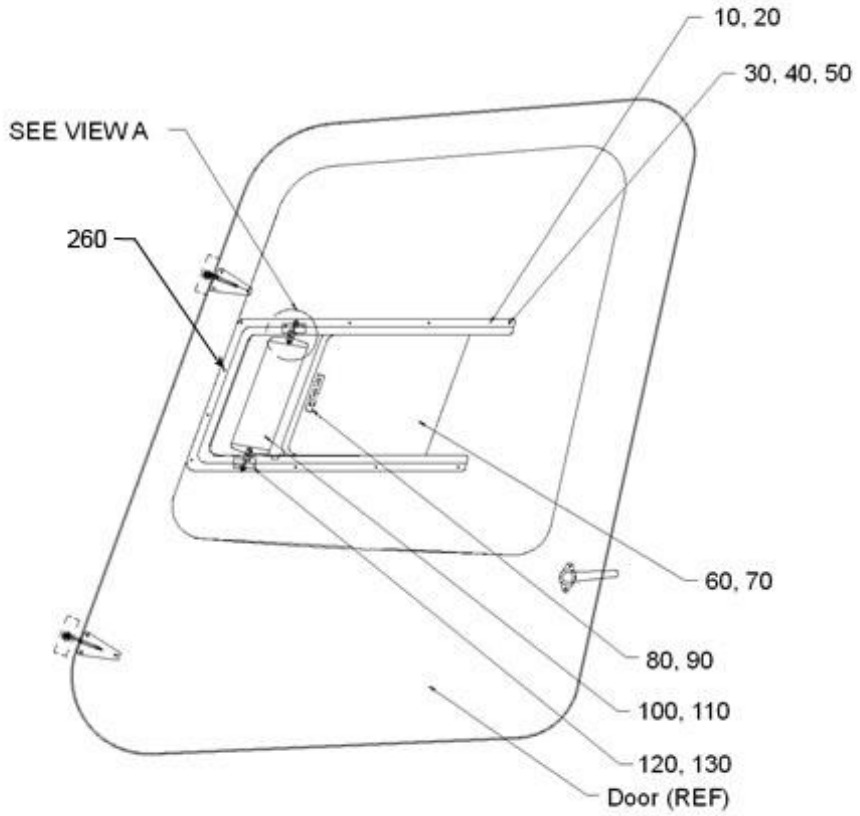

4118272-1 Assembly, with L/H Wing Vent Shown

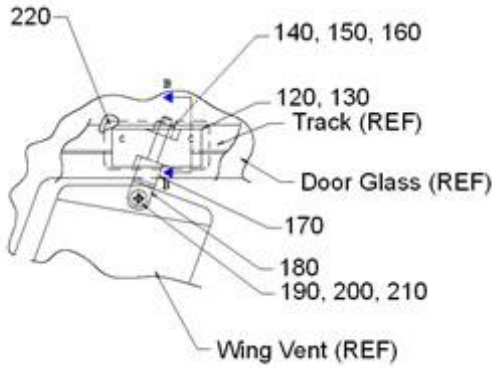

VIEW A
Typical for both top
and bottom of wing vent

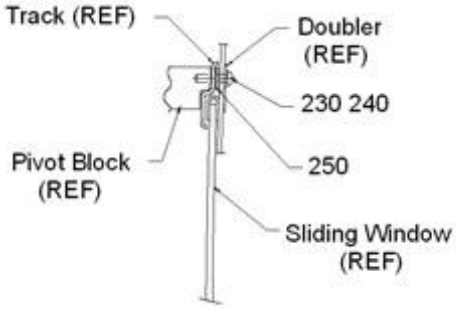

SECTION B-B
Looking forward

480/480B S/N 5001 and subsequent

FIGURE 3-4. SLIDING WINDOW INSTALLATION

UNCONTROLLED COPY WHEN DOWNLOADED OR PRINTED

Visit www.enstromhelicopter.com for instructions to order an original manual and to register for email notification of updates.

FIGURE 3-4. SLIDING WINDOW INSTALLATION

ITEM NUMBER	PART NUMBER	DESCRIPTION	QTY PER ASSY	EFFECTIVITY		
				TH-28	480	480B
–	4118272-1	Sliding Window, L/H (With Wing Vent)	1		X	X
–	4118272-2	Sliding Window, R/H (With Wing Vent)	1		X	X
–	4118272-3	Sliding Window, L/H (Without Wing Vent)	1		X	X
–	4118272-4	Sliding Window, R/H (Without Wing Vent)	1		X	X
10†	4118268-13	. Track, Window Sliding, L/H	1		X	X
10*	4118268-11	. Track, Window Sliding, L/H (Superseded by 4118268-13)	1		X	X
20†	4118268-14	. Track, Window Sliding, R/H	1		X	X
20*	4118268-12	. Track, Window Sliding, R/H (Superseded by 4118268-14)	1		X	X
30*	AN526-632R6	. Screw: Machine	6		X	X
40*	AN960-6L	. Washer, Flat	10		X	X
50*	F22NKM62	. Nut: Hex	10		X	X
60*	4118270-1	. Window, Sliding, L/H	1		X	X
70*	4118270-2	. Window, Sliding, R/H	1		X	X
80*	28-11712-15	. Handle Window Sliding Black	1		X	X
90*	AN526-632R8	. Screw: Machine	3		X	X
100	4118271-1	. Wing Vent - Slide Window, L/H	1		X	X
110	4118271-2	. Wing Vent - Slide Window, R/H	1		X	X
120	4118269-11	. Pivot Block, Vent Wing, L/H	2		X	X
130	4118269-12	. Pivot Block, Vent Wing, R/H	2		X	X
140**	NAS1149C0363R	. Washer, Flat	A/R		X	X
150**	28-11711-15	. Spacer Pivot Wing Vent Window (Deleted)	2		X	X
160	AN364-1032	. Nut, Hex	2		X	X
170	28-11711-15	. Spacer Pivot Wing Vent Window	2		X	X
180	AN42B-14A	. Bolt, Eye	2		X	X
190**	AN526C-1032R9	. Screw: Machine	1		X	X
200**	NAS1149C0363R	. Washer, Flat	2		X	X
210**	AN364-1032	. Nut, Hex	1		X	X
220	28-11714-11	. Doubler Vent Window	2		X	X
230	AN526-632R6	. Screw: Machine	4		X	X
240	AN960-6L	. Washer, Flat	4		X	X
250	4910-50	. Tape: Foam	A/R		X	X
260	AN526-632R8	Screw: Machine	4		X	X

UNCONTROLLED COPY WHEN DOWNLOADED OR PRINTED

Visit www.enstromhelicopter.com for instructions to order an original manual and to register for email notification of updates.

Note: Hardware quantities are for one window.

* This hardware is used for assemblies both with and without wing vent. Remaining hardware is used only on windows with the wing vent.

** Effectivity 480B S/N 5155 and subsequent. Retrofittable to 480 S/N 5001, 480B S/N 5042 and subsequent.

† Effectivity 480B S/N 5171 and subsequent. Retrofittable to 480 S/N 5001 – 5041 and 480B S/N 5042 and subsequent.

UNCONTROLLED COPY WHEN DOWNLOADED OR PRINTED

Visit www.enstromhelicopter.com for instructions to order an original manual and to register for email notification of updates.

INTENTIONALLY LEFT BLANK

UNCONTROLLED COPY WHEN DOWNLOADED OR PRINTED

Visit www.enstromhelicopter.com for instructions to order an original manual and to register for email notification of updates.

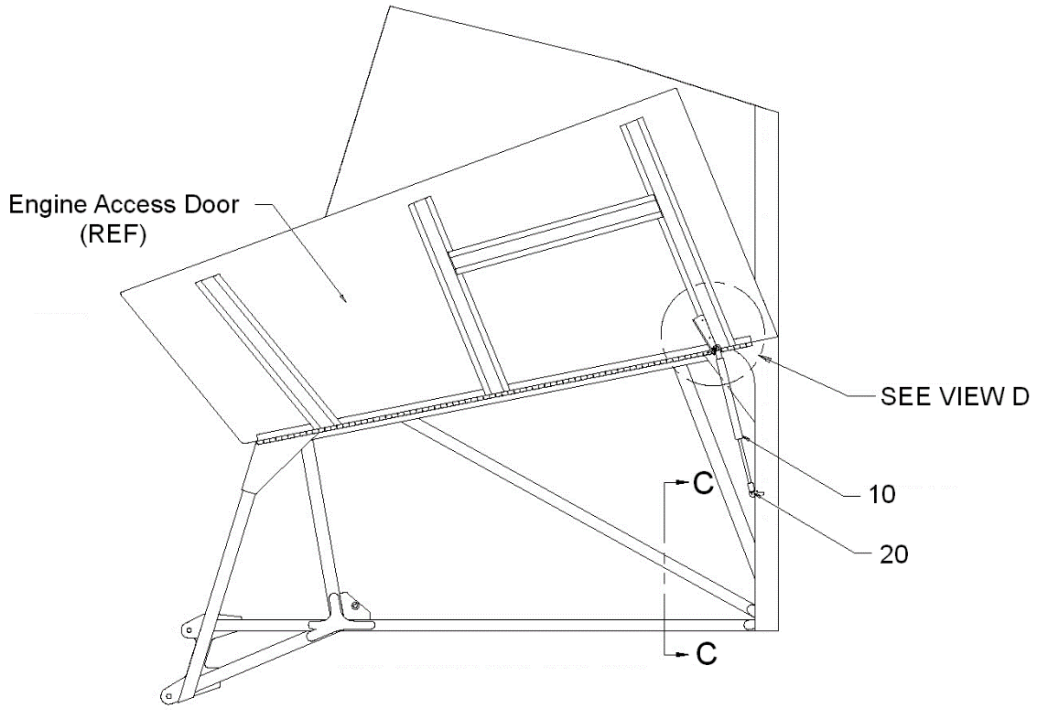

VIEW LOOKING INBOARD LEFT SIDE
RIGHT SIDE OPPOSITE

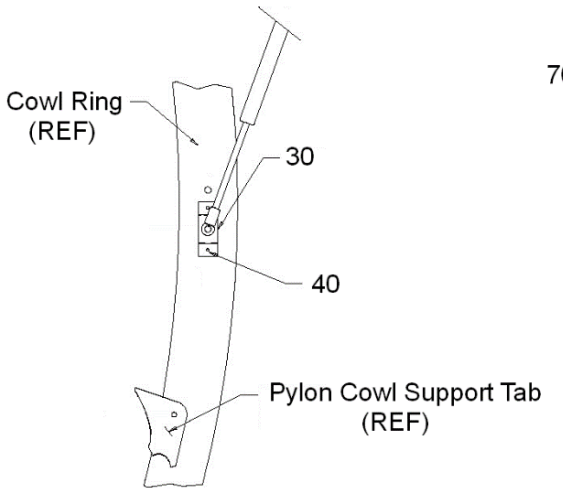

VIEW C

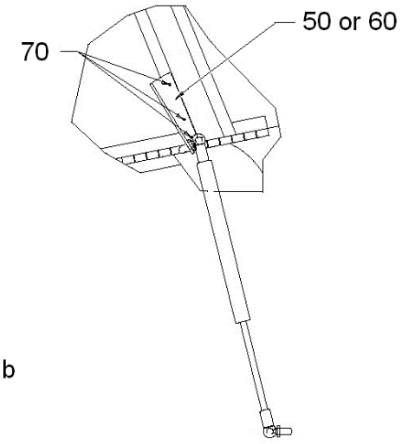

VIEW D

FIGURE 3-5. ENGINE COWL DOOR OPENER

UNCONTROLLED COPY WHEN DOWNLOADED OR PRINTED

Visit www.enstromhelicopter.com for instructions to order an original manual and to register for email notification of updates.

FIGURE 3-5. ENGINE COWL DOOR OPENER

ITEM NUMBER	PART NUMBER	DESCRIPTION	QTY PER ASSY	EFFECTIVITY		
				TH-28	480	480B
–	4220043-3	. Engine Cowl Door Opener Installation	REF		X	X
10	ECD4032-3	. . Opener: Door, Engine Cowling	2		X	X
20	M45913/2-4CG5C	. . Nut, Self Locking	4		X	X
20	MS51922-1	. . Nut, Self Locking (Superseded by M45913/2-4CG5C)	4		X	X
30	4220044-13	. . Bracket Door Opener Engine Cowl	2		X	X
40	MS20470AD4-3	. . Rivet	4		X	X
50	4220044-21	. . Bracket Door Opener Engine Cowl Left	1		X	X
60	4220044-22	. . Bracket Door Opener Engine Cowl Right	1		X	X
70	AN470AD3-5	. . Rivet	6		X	X

UNCONTROLLED COPY WHEN DOWNLOADED OR PRINTED

Visit www.enstromhelicopter.com for instructions to order an original manual and to register for email notification of updates.

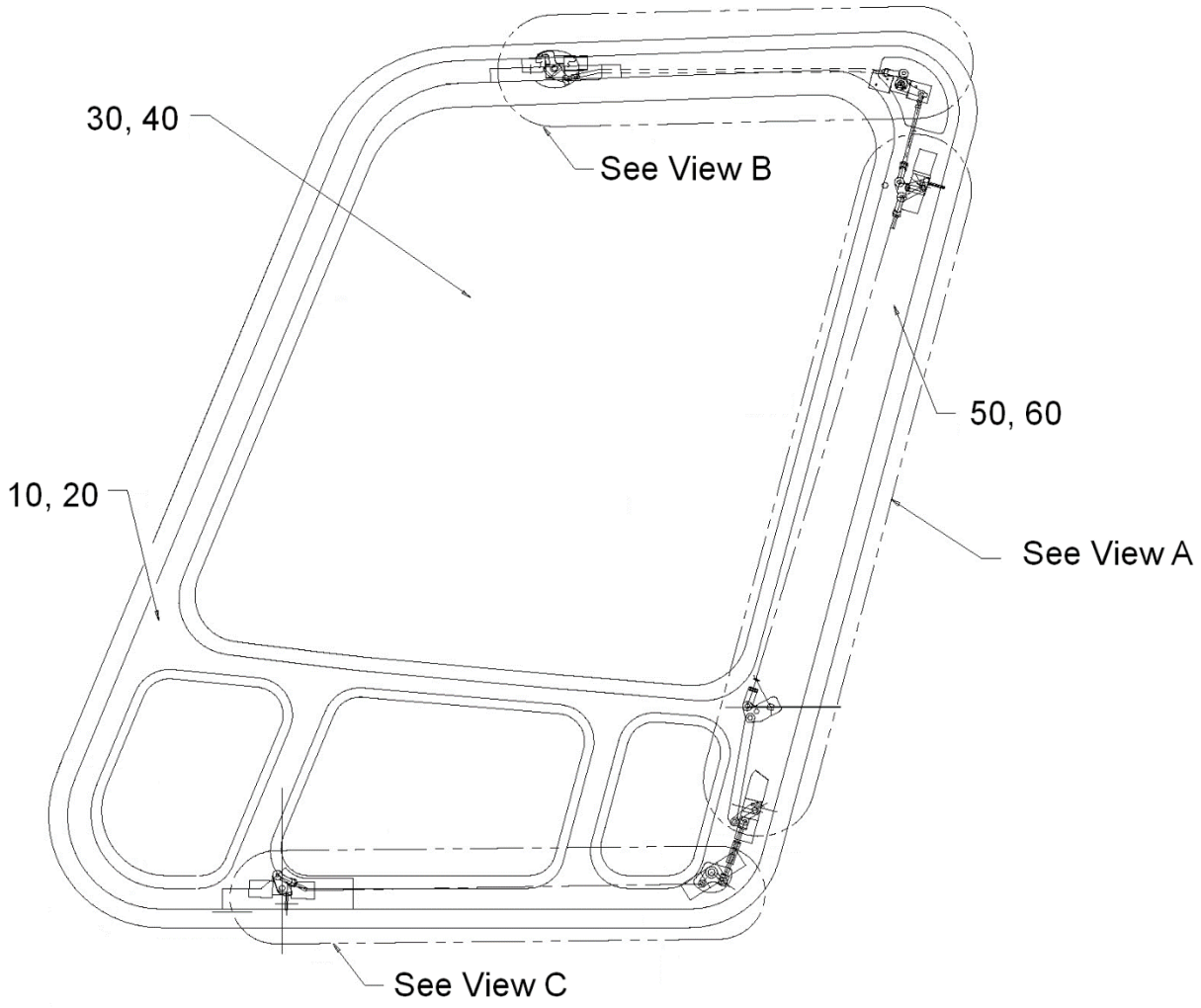

Orientation View
Looking Outboard at Right Door

Sheet 1 of 3

FIGURE 3-6. CABIN DOOR ASSEMBLY

UNCONTROLLED COPY WHEN DOWNLOADED OR PRINTED

Visit www.enstromhelicopter.com for instructions to order an original manual and to register for email notification of updates.

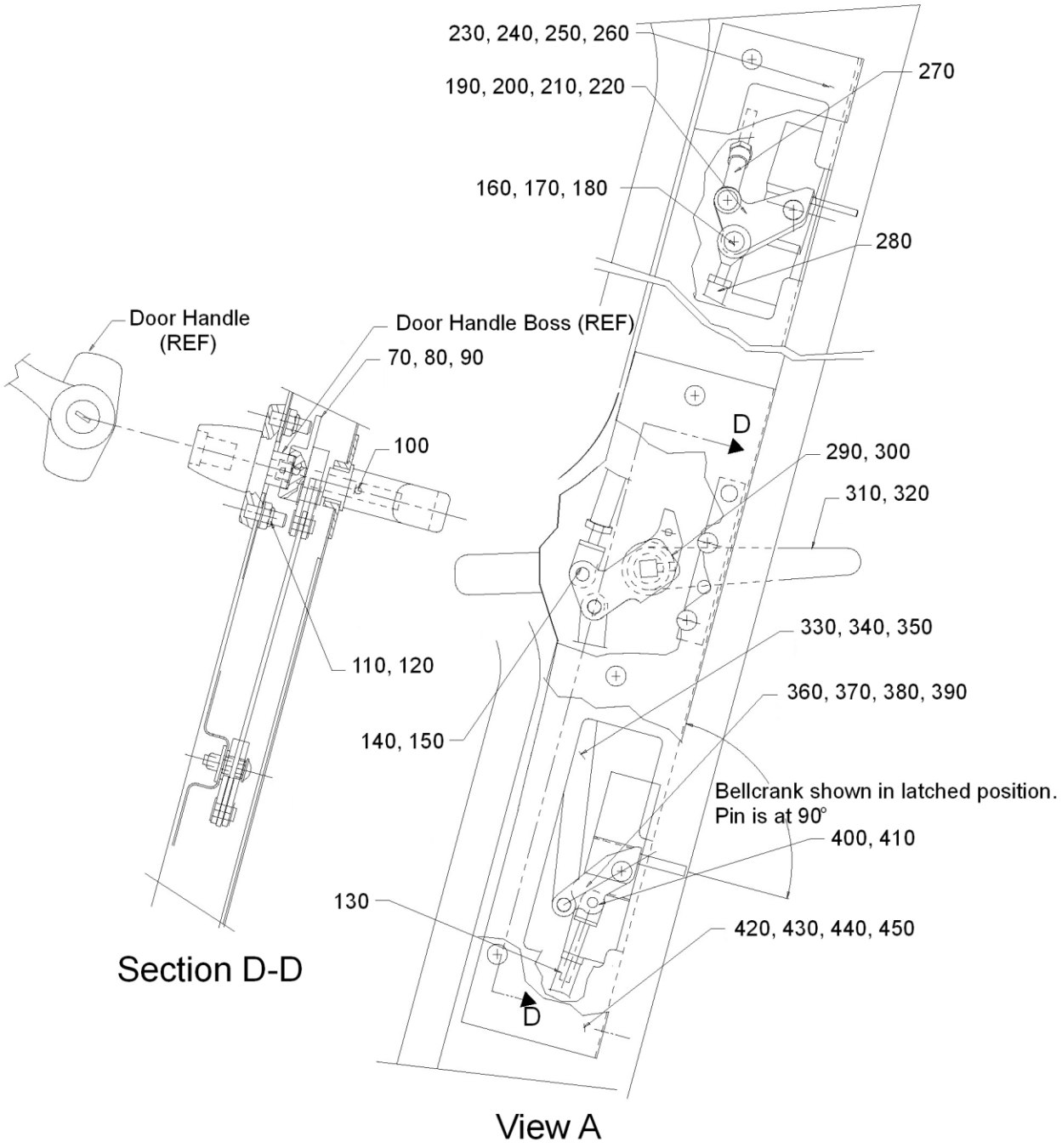

Sheet 2 of 3

FIGURE 3-6. CABIN DOOR ASSEMBLY

UNCONTROLLED COPY WHEN DOWNLOADED OR PRINTED

Visit www.enstromhelicopter.com for instructions to order an original manual and to register for email notification of updates.

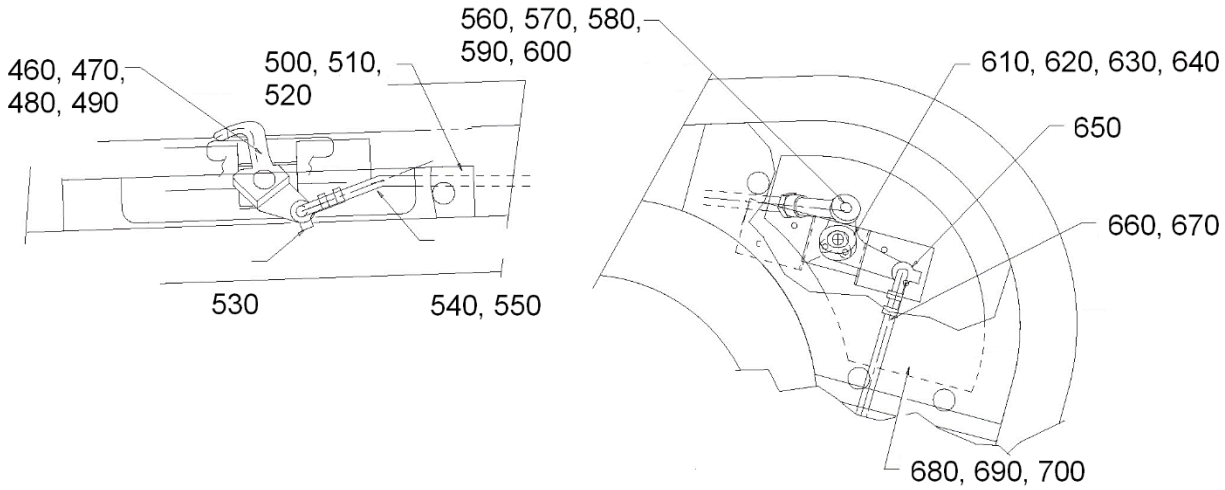

View B

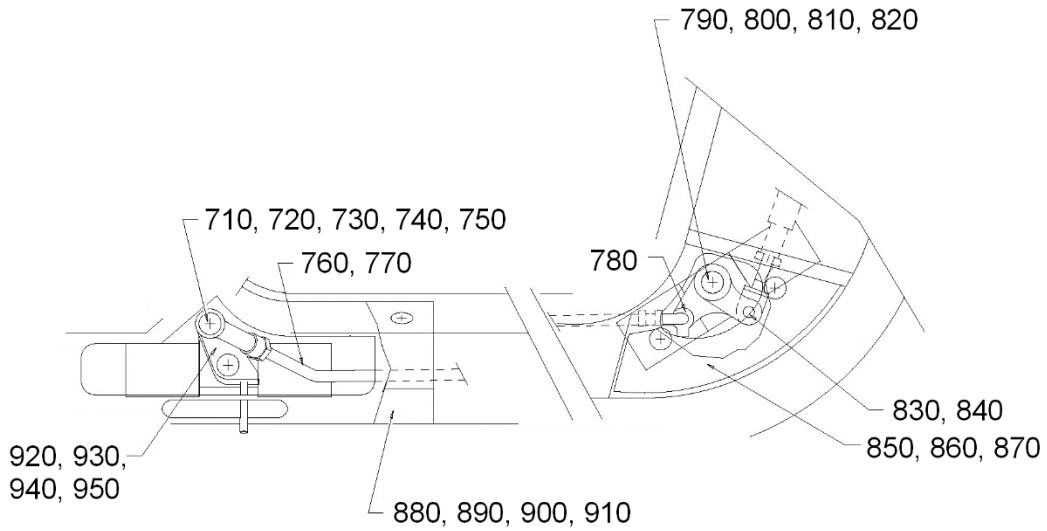

View C

Sheet 3 of 3

FIGURE 3-6. CABIN DOOR ASSEMBLY

UNCONTROLLED COPY WHEN DOWNLOADED OR PRINTED

Visit www.enstromhelicopter.com for instructions to order an original manual and to register for email notification of updates.

FIGURE 3-6. CABIN DOOR ASSEMBLY

ITEM NUMBER	PART NUMBER	DESCRIPTION	QTY PER ASSY	EFFECTIVITY		
				TH-28	480	480B
–	4118310-905	Door Assembly Cabin Left (Fully Assembled)	1		X	X
–	4118310-906	Door Assembly Cabin Right (Fully Assembled)	1		X	X
010	4118310-5	. Door Assembly Left	1		X	X
020	4118310-6	. Door Assembly Right	1		X	X
030	4114002-21	. Glass, Door (LH)	1		X	X
040	4114002-22	. Glass, Door (RH)	1		X	X
050	4118309-903	. Door Frame Fiberglass Assy Bonded (L/H)	1		X	X
060	4118309-904	. Door Frame Fiberglass Assy Bonded (R/H)	1		X	X
070	4118312-21	. Trigger-Door Handle Latch Stop (L/H)	1		X	X
080	4118312-22	. Trigger-Door Handle Latch Stop (R/H)	1		X	X
090	MS18066-25	. Screw, Set	1		X	X
100	23S-094-075	. Roll Pin	1		X	X
110	AN364-428A	. Nut	2		X	X
120	AN960-416L	. Washer, Flat	2		X	X
130	4118292-3	. Linkage Assy Door Handle (R/H)	1		X	X
140	4118292-17	. Bushing Door Handle (L/H)	1		X	X
150	5133-25-S-PP	. Ring, Snap	1		X	X
160	AN526-1032R8	. Screw, Machine	1		X	X
170	AN960-10	. Washer, Flat	1		X	X
180	AN364-1032A	. Nut, Hex	1		X	X
190	4118291-5	. Bellcrank Assy Door Latch (L/H)	1		X	X
200	4118291-6	. Bellcrank Assy Door Latch (R/H)	1		X	X
210	4118291-25	. Shoulder Screw Door Latch (R/H)	1		X	X
220	AN526-1032R6	. Screw, Machine	1		X	X
230	4118294-19	. Cover Access Door Latch (L/H)	1		X	X
240	4118294-20	. Cover Access Door Latch (R/H)	1		X	X
250	MS24694-51	. Screw	2		X	X
260	AN526-1032R8	. Screw, Machine	2		X	X
270	HFVV3M	. Rod End	1		X	X
280	4118292-1	. Linkage Assy Door Handle (L/H)	1		X	X
290	4118292-47	. Bellcrank Door Handle Linkage	1		X	X
300	MS18066-8	. Screw, Set	1		X	X
310	4118260-5	. Door Handle Assembly (L/H)	1		X	X
320	4118260-6	. Door Handle Assembly (R/H)	1		X	X

UNCONTROLLED COPY WHEN DOWNLOADED OR PRINTED

Visit www.enstromhelicopter.com for instructions to order an original manual and to register for email notification of updates.

FIGURE 3-6. CABIN DOOR ASSEMBLY

ITEM NUMBER	PART NUMBER	DESCRIPTION	QTY PER ASSY	EFFECTIVITY		
				TH-28	480	480B
330	4118292-13	. Link Door Handle	1		X	X
340	4118292-17	. Bushing Door Handle (L/H)	2		X	X
350	5133-25-S-PP	. Ring, Snap	2		X	X
360	4118291-101	. Bellcrank Assy Door Latch (L/H)	1		X	X
370	4118291-102	. Bellcrank Assy Door Latch (R/H)	1		X	X
380	4118291-25	. Shoulder Screw Door Latch (L/H)	1		X	X
390	AN526-1032R6	. Screw, Machine	1		X	X
400	4118292-43	. Bushing Door Handle (R/H)	1		X	X
410	5133-18-S-PP	. Ring, Snap	1		X	X
420	4118294-26	. Cover Access Door Latching (R/H)	1		X	X
430	4118313-1	. Cover Assembly Handle Latch Stop (L/H)	1		X	X
440	MS24694-51	. Screw, Machine	2		X	X
450	AN526-1032R8	. Screw, Machine	4		X	X
460	4118291-7	. Bellcrank Assy Door Latch (L/H)	1		X	X
470	4118291-8	. Bellcrank Assy Door Latch (R/H)	1		X	X
480	4118291-25	. Shoulder Screw Door Latch (R/H)	1		X	X
490	MS24694-47	. Screw	1		X	X
500	4118294-25	. Cover Access Door Latching (L/H)	1		X	X
510	4118294-26	. Cover Access Door Latching (R/H)	1		X	X
520	MS24694-51	. Screw	4		X	X
530	HS-99417	. Clip	1		X	X
540	4118292-33	. Linkage Rod Door Handle (L/H)	1		X	X
550	4118292-34	. Linkage Rod Door Handle (R/H)	1		X	X
560	HFVV3M	. Rod End	1		X	X
570	AN315-3R	. Nut, Hex	1		X	X
580	AN960-10	. Washer, Flat	1		X	X
590	AN526-1032R8	. Screw, Machine	1		X	X
600	AN364-1032A	. Nut, Hex	1		X	X
610	4118292-7	. Bellcrank Assy Door Latch	1		X	X
620	4118292-8	. Bellcrank Assy Door Handle	1		X	X
630	4118291-13	. Spacer Door Latch Bellcrank	1		X	X
640	AN526-1032R8	. Screw, Machine	1		X	X
650	HS-99417	. Clip	1		X	X
660	4118292-29	. Linkage Rod Door Handle (L/H)	1		X	X

UNCONTROLLED COPY WHEN DOWNLOADED OR PRINTED

Visit www.enstromhelicopter.com for instructions to order an original manual and to register for email notification of updates.

FIGURE 3-6. CABIN DOOR ASSEMBLY

ITEM NUMBER	PART NUMBER	DESCRIPTION	QTY PER ASSY	EFFECTIVITY		
				TH-28	480	480B
670	4118292-30	. Linkage Rod Door Handle (R/H)	1		X	X
680	4118308-11	. Cover-Access Door Doubler (L/H)	1		X	X
690	4118308-12	. Cover-Access Door Doubler (R/H)	1		X	X
700	AN526-1032R8	. Screw, Machine	3		X	X
710	HFVV3M	. Rod End	1		X	X
720	AN315-3R	. Nut, Hex	1		X	X
730	AN960-10	. Washer, Flat	1		X	X
740	AN526-1032R8	. Screw, Machine	1		X	X
750	AN364-1032A	. Nut, Hex	1		X	X
760	4118292-35	. Linkage Rod Door Handle (L/H)	1		X	X
770	4118292-36	. Linkage Rod Door Handle (R/H)	1		X	X
780	HS-99417	. Clip	1		X	X
790	4118292-5	. Bellcrank Assy Door Handle (L/H)	1		X	X
800	4118292-6	. Bellcrank Assy Door Handle (R/H)	1		X	X
810	4118291-13	. Spacer Door Latch Bellcrank	1		X	X
820	AN526-1032R8	. Screw, Machine	1		X	X
830	4118292-43	. Bushing Door Handle (R/H)	1		X	X
840	5133-18-S-PP	. Ring, Snap	1		X	X
850	4118308-13	. Cover-Access Door Doubler (L/H)	1		X	X
860	4118308-14	. Cover-Access Door Doubler (R/H)	1		X	X
870	AN526-1032R8	. Screw, Machine	2		X	X
880	4118294-17	. Cover Access Door Latch (L/H)	1		X	X
890	4118294-18	. Cover Access Door Latch (R/H)	1		X	X
900	MS24694-51	. Screw	2		X	X
910	AN526-1032R8	. Screw, Machine	2		X	X
920	4118291-9	. Bellcrank Assy Door Latch (L/H)	1		X	X
930	4118291-10	. Bellcrank Assy Door Latch (R/H)	1		X	X
940	4118291-25	. Shoulder Screw Door Latch (L/H)	1		X	X
950	AN526-1032R6	. Screw, Machine	1		X	X

Note: All quantities listed are per door.

UNCONTROLLED COPY WHEN DOWNLOADED OR PRINTED

Visit www.enstromhelicopter.com for instructions to order an original manual and to register for email notification of updates.

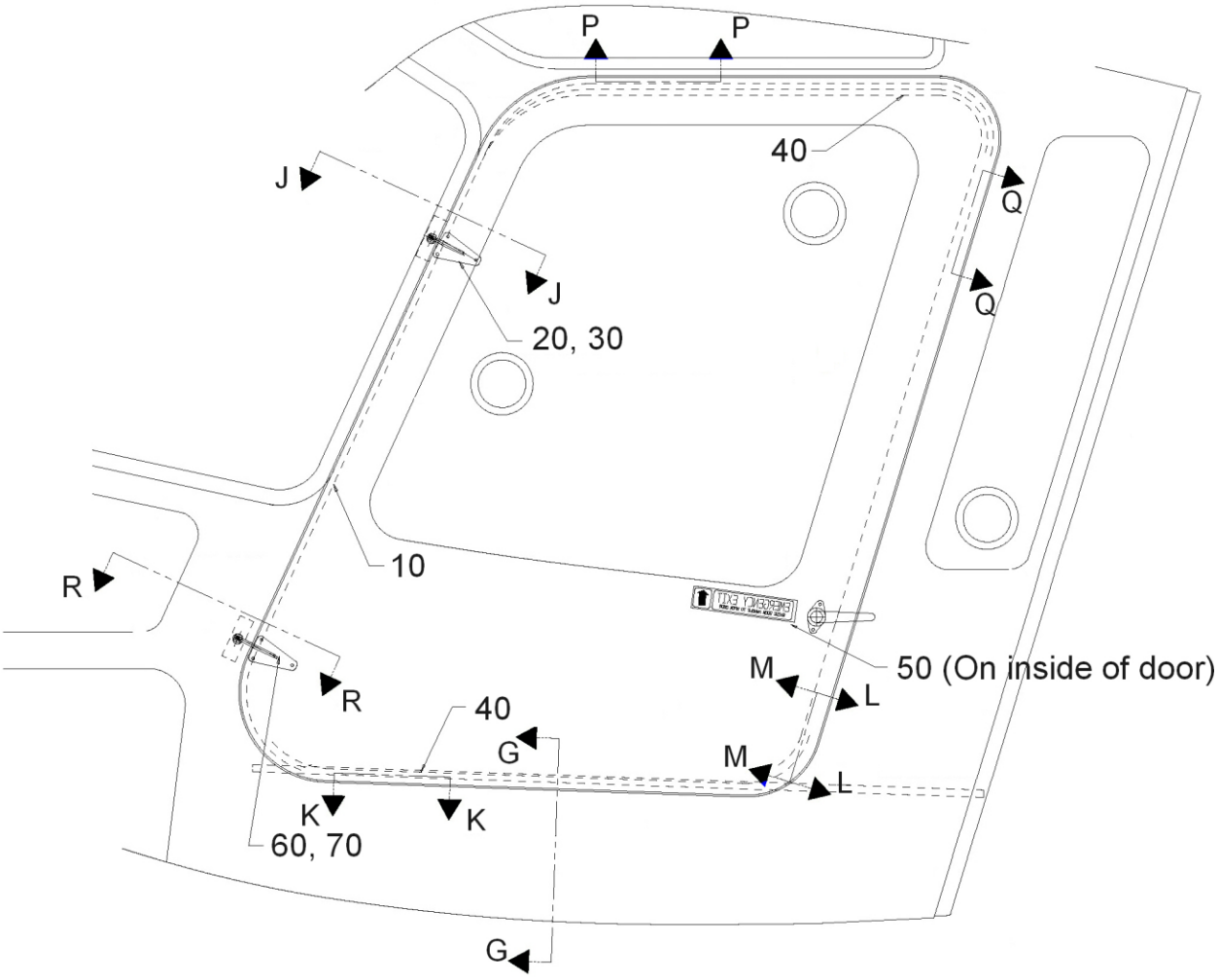

ORIENTATION VIEW
LOOKING INBOARD AT LEFT DOOR

Sheet 1 of 5

FIGURE 3-6.1 CABIN DOOR INSTALLATION

UNCONTROLLED COPY WHEN DOWNLOADED OR PRINTED

Visit www.enstromhelicopter.com for instructions to order an original manual and to register for email notification of updates.

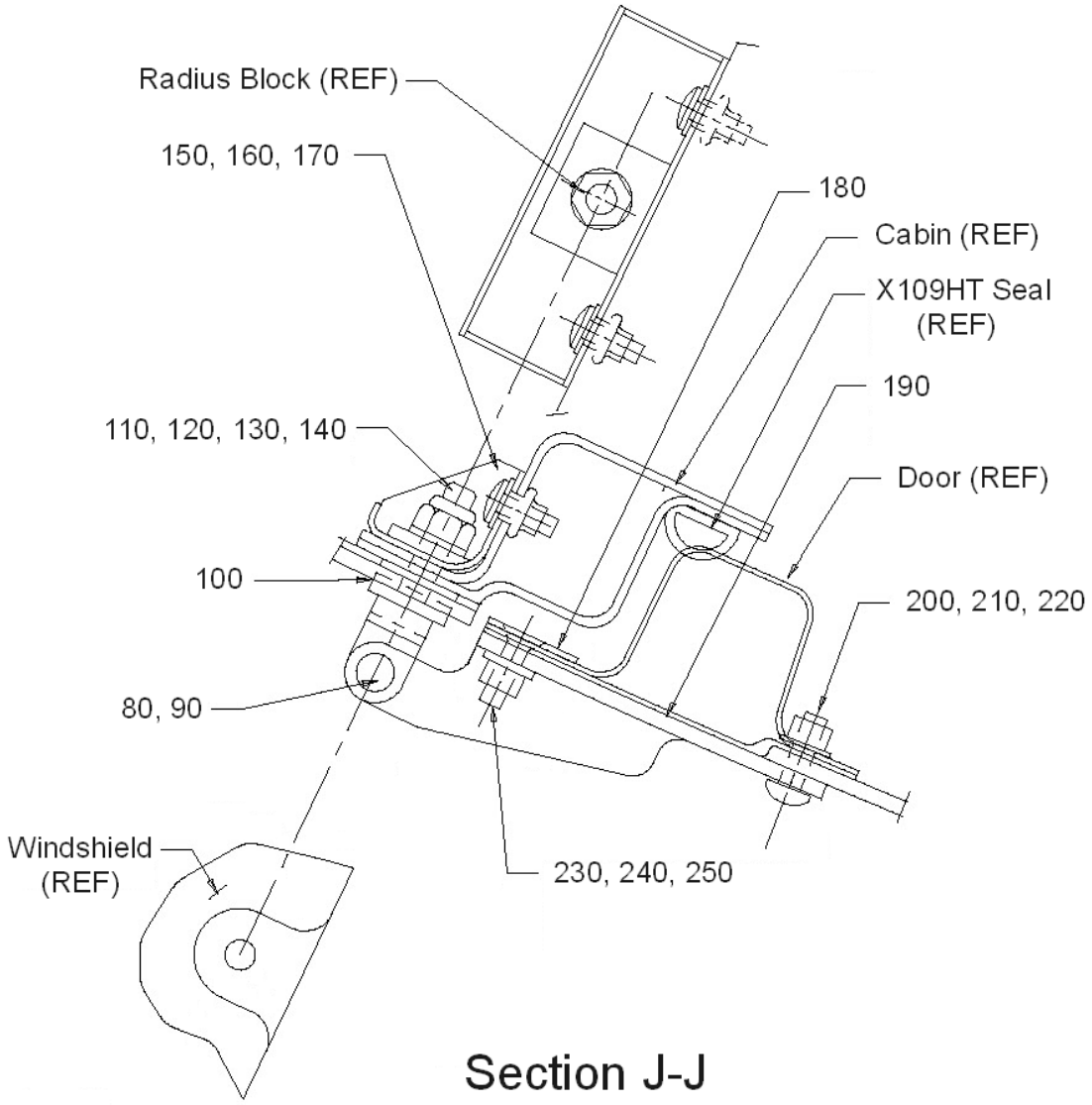

Sheet 2 of 5

FIGURE 3-6.1 CABIN DOOR INSTALLATION

UNCONTROLLED COPY WHEN DOWNLOADED OR PRINTED

Visit www.enstromhelicopter.com for instructions to order an original manual and to register for email notification of updates.

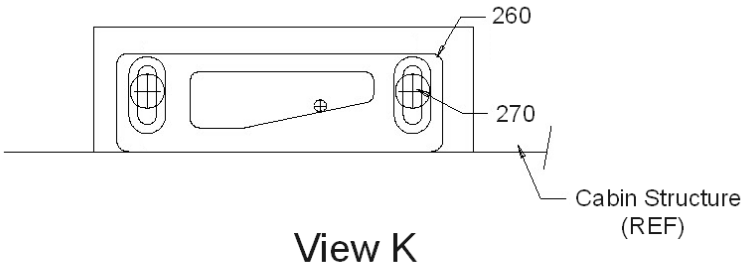

View K

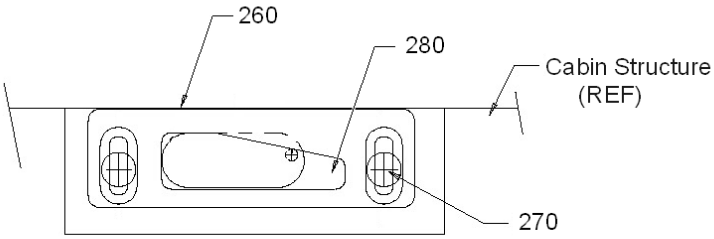

View P
Top Latch

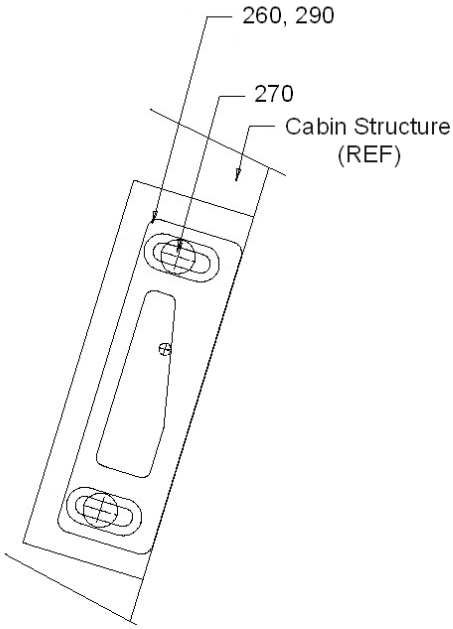

View Q

Sheet 3 of 5

FIGURE 3-6.1 CABIN DOOR INSTALLATION

UNCONTROLLED COPY WHEN DOWNLOADED OR PRINTED

Visit www.enstromhelicopter.com for instructions to order an original manual and to register for email notification of updates.

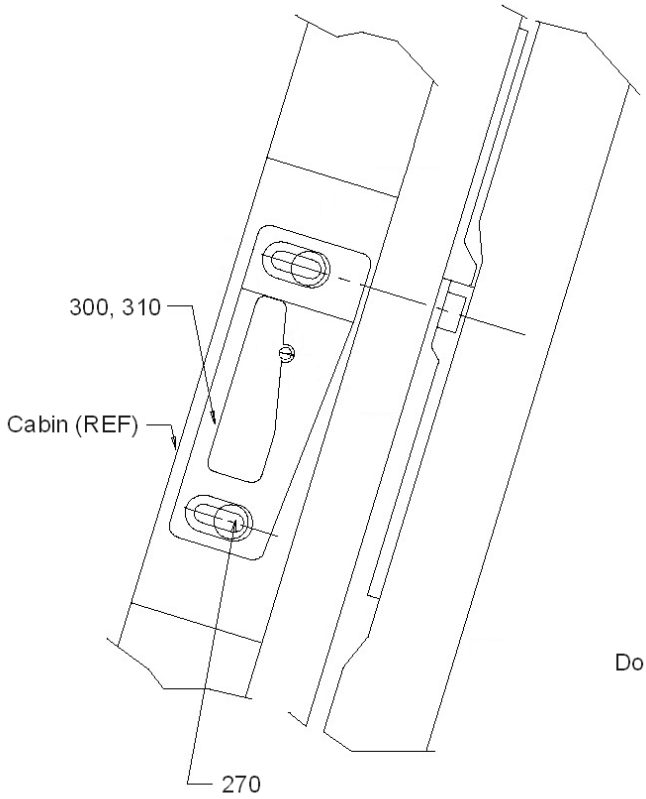

View L
Looking at Door Jamb

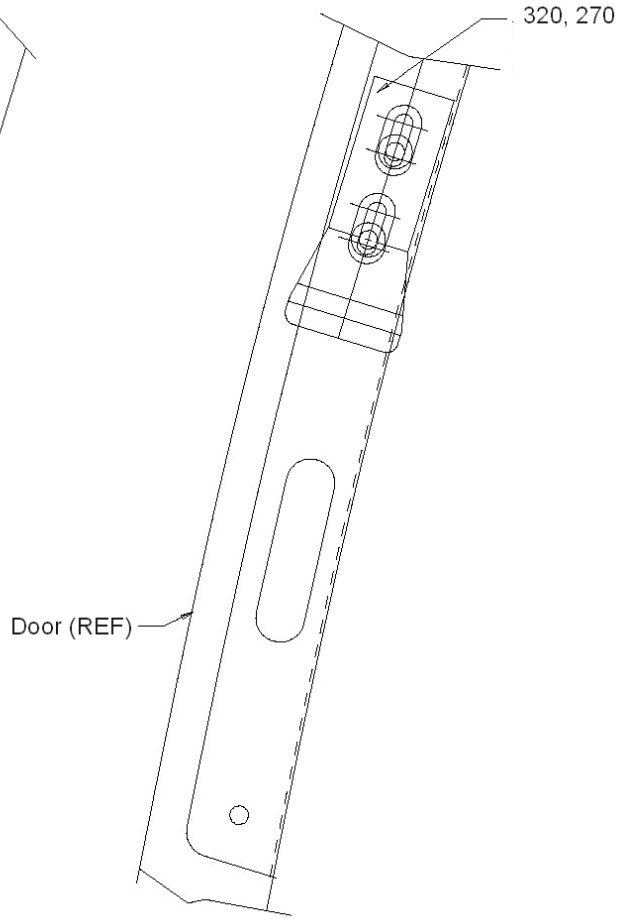

View M
Looking at Door Edge

Sheet 4 of 5

FIGURE 3-6.1 CABIN DOOR INSTALLATION

UNCONTROLLED COPY WHEN DOWNLOADED OR PRINTED

Visit www.enstromhelicopter.com for instructions to order an original manual and to register for email notification of updates.

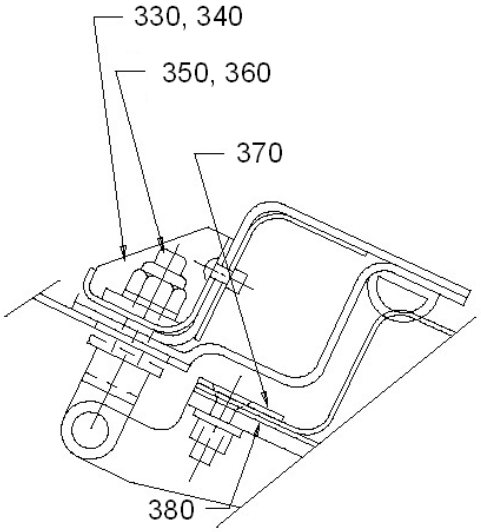

Section R-R

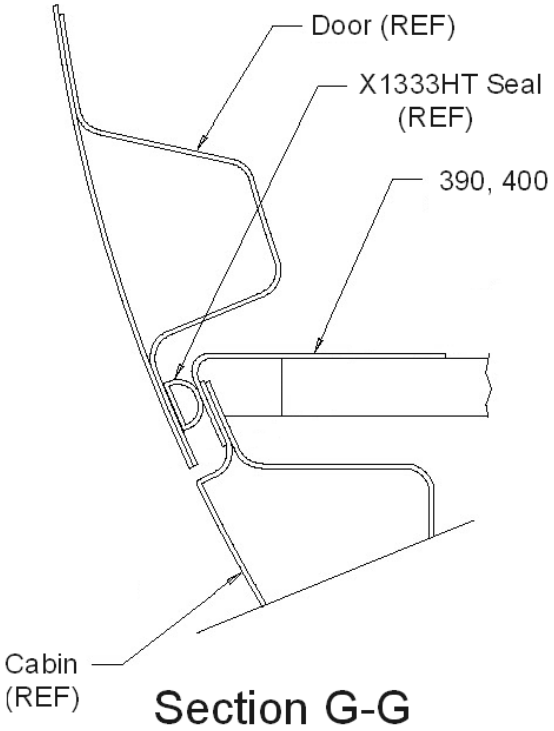

Section G-G

Sheet 5 of 5

FIGURE 3-6.1 CABIN DOOR INSTALLATION

UNCONTROLLED COPY WHEN DOWNLOADED OR PRINTED

Visit www.enstromhelicopter.com for instructions to order an original manual and to register for email notification of updates.

FIGURE 3-6.1. CABIN DOOR INSTALLATION

ITEM NUMBER	PART NUMBER	DESCRIPTION	QTY PER ASSY	EFFECTIVITY		
				TH-28	480	480B
–	4118310-1	Cabin Door Installation Left	REF		X	X
–	4118310-2	Cabin Door Installation Right	REF		X	X
10	X109HT	. Seal, Door, Trim-Lok	12 ft.		X	X
20	4118281-1	. Hinge (LH)	1		X	X
30	4118281-2	. Hinge (RH)	1		X	X
40	X1333HT	. Seal, Rubber	9 ft.		X	X
50	4119839-13	. Placard: Emergency Exit	1		X	X
60	4118281-3	. Hinge (LH)	1		X	X
70	4118281-4	. Hinge (RH)	1		X	X
80	MS20392-2C17	. Pin, Clevis	2		X	X
90	AN381-2-10	. Pin Cotter	2		X	X
100	Harper 1/4	. Washer (Used as shim)	A/R		X	X
110	4118278-23	. Door, Cabin, Hinge, Post	1		X	X
120	4118278-21	. Door Cabin Radius Block	1		X	X
130	AN960-416L	. Washer, Flat	2		X	X
140	AN365-428A	. Nut, Hex	2		X	X
150	4118284-1	. Doubler, Door Hinge	2		X	X
160	S8P-270	. PlusNut	2		X	X
170	AN526-1032R8	. Screw, Machine	1		X	X
180	4118284-13	. Doubler	2		X	X
190	4118281-19	. Shim-Door Hinge Machined	1		X	X
200	MS27039-1-08	. Screw, Machine	2		X	X
210	AN960PD10L	. Washer, Flat	2		X	X
220	MS21042-3	. Nut, Hex	2		X	X
230	AN509-10R10	. Screw, Machine	4		X	X
240	AN960PD10L	. Washer, Flat	4		X	X
250	MS21042-3	. Nut, Hex	4		X	X
260	4118290-15	. Door Latch Support Strike (LH)	3		X	X
270	MS27039-1-09	. Screw, Machine	6		X	X
280	4118290-33	. Door Latch Support Catch Plate	1		X	X
290	4118290-16	. Door Latch Support Strike (RH)	1		X	X
300	4118290-17	. Door Latch Support Strike (LH)	1		X	X
310	4118290-18	. Door Latch Support Strike (RH)	1		X	X
320	4118290-21	. Door Latch Support Strike	1		X	X

UNCONTROLLED COPY WHEN DOWNLOADED OR PRINTED

Visit www.enstromhelicopter.com for instructions to order an original manual and to register for email notification of updates.

FIGURE 3-6.1. CABIN DOOR INSTALLATION

ITEM NUMBER	PART NUMBER	DESCRIPTION	QTY PER ASSY	EFFECTIVITY		
				TH-28	480	480B
330	4118284-1	. Doubler Door Hinge	1		X	X
340	MS20470AD4-4	. Rivet	2		X	X
350	4118278-23	. Door, Cabin, Hinge, Post	1		X	X
360	4118278-21	. Door Cabin Radius Block	1		X	X
370	4118284-13	. Doubler	1		X	X
380	4118281-21	. Shim-Door Hinge Machined	A/R		X	X
390	4114009-3	. Threshold (LH)	1		X	X
400	4114009-4	. Threshold (RH)	1		X	X

Note: All quantities listed are per door.

UNCONTROLLED COPY WHEN DOWNLOADED OR PRINTED

Visit www.enstromhelicopter.com for instructions to order an original manual and to register for email notification of updates.

INTENTIONALLY LEFT BLANK

UNCONTROLLED COPY WHEN DOWNLOADED OR PRINTED

Visit www.enstromhelicopter.com for instructions to order an original manual and to register for email notification of updates.

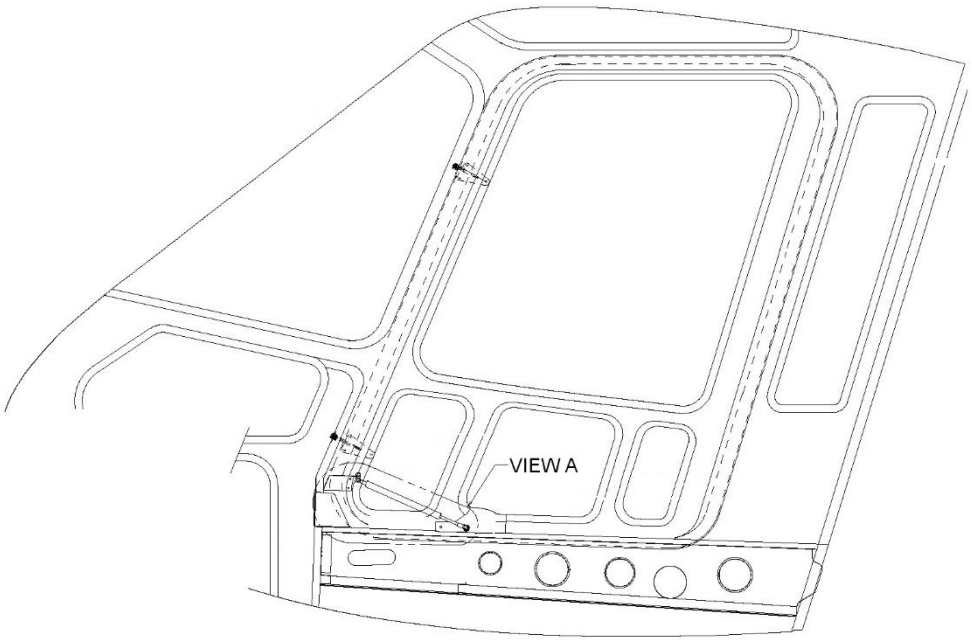

ORIENTATION VIEW
LOOKING OUTBOARD AT RIGHT DOOR

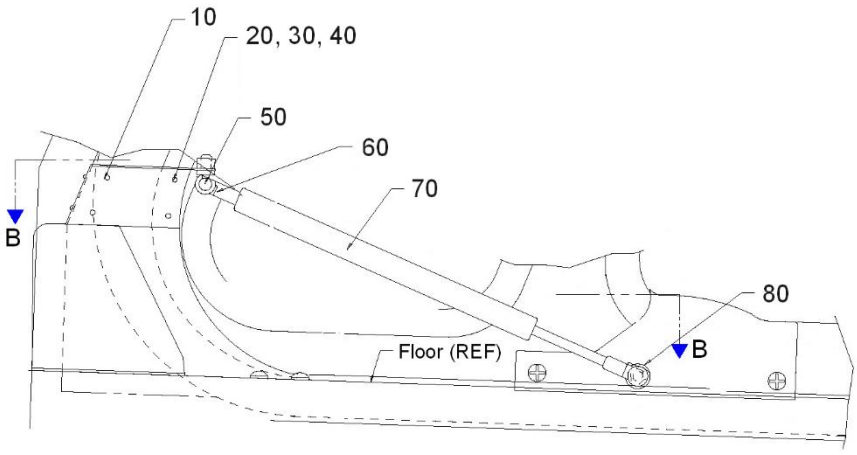

VIEW A

Sheet 1 of 2

FIGURE 3-6.2 CABIN DOOR OPENER

UNCONTROLLED COPY WHEN DOWNLOADED OR PRINTED

Visit www.enstromhelicopter.com for instructions to order an original manual and to register for email notification of updates.

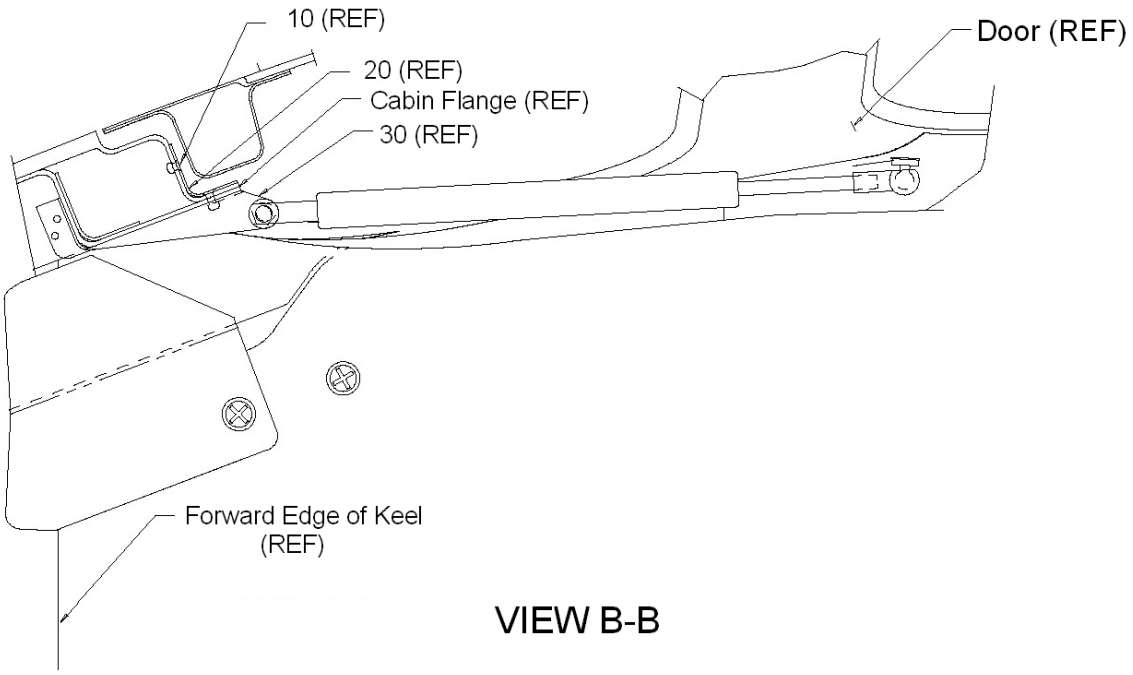

Sheet 2 of 2

FIGURE 3-6.2 CABIN DOOR OPENER

UNCONTROLLED COPY WHEN DOWNLOADED OR PRINTED

Visit www.enstromhelicopter.com for instructions to order an original manual and to register for email notification of updates.

FIGURE 3-6.2 CABIN DOOR OPENER

ITEM NUMBER	PART NUMBER	DESCRIPTION	QTY PER ASSY	EFFECTIVITY		
				TH-28	480	480B
–	4220153-1	Door Opener/Restraint Installation	REF	X	X	X
10	CR3213-4-4	. Rivet	8	X	X	X
20	4220152-11	. Angle Bracket Door Opener	2	X	X	X
–	CR3212-4-4	. Rivet	4		X	X
30	4220152-14	. Bracket Door Opener (Right Side)	1	X	X	X
30	4220152-13	. Bracket Door Opener (Left Side)	1	X	X	X
40	MS20426AD4-8	. Rivet	4	X	X	X
50	M45913/2-4CG5C	. Nut	2		X	X
50	MS51922-1	. Nut (Superseded by M45913/2-4CG5C)	2	X	X	X
60	NPN	. Retaining Clip (Supplied with ECD4032-7)	4	X	X	X
70	ECD4032-7	. Opener: Door, Turbine Cabin	2	X	X	X
80	S25P280	. PlusNut	2	X	X	X
–	MS35333-42	. Washer	2		X	X

UNCONTROLLED COPY WHEN DOWNLOADED OR PRINTED

Visit www.enstromhelicopter.com for instructions to order an original manual and to register for email notification of updates.

INTENTIONALLY LEFT BLANK

UNCONTROLLED COPY WHEN DOWNLOADED OR PRINTED

Visit www.enstromhelicopter.com for instructions to order an original manual and to register for email notification of updates.

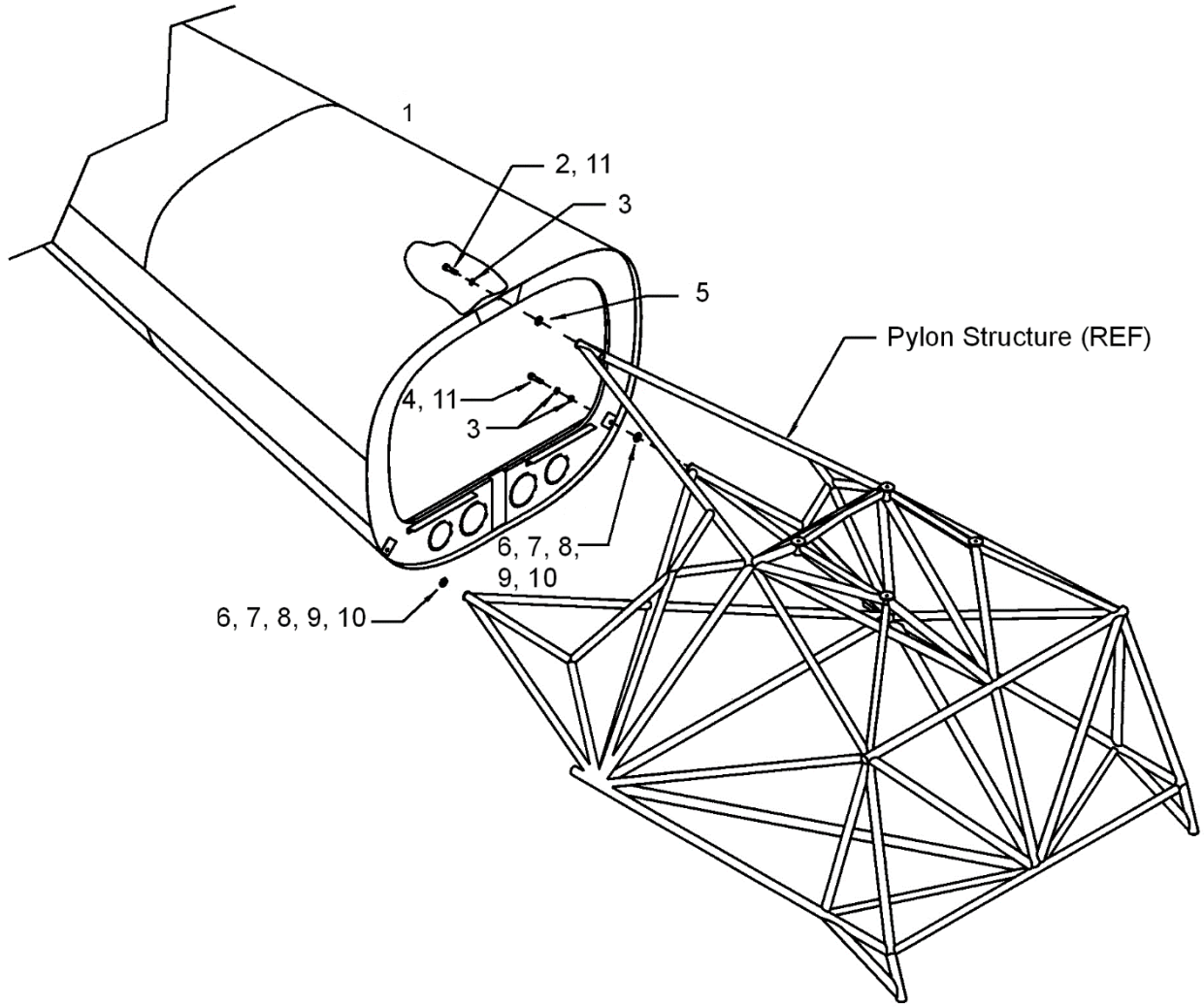

FIGURE 3-7. TAILCONE INSTALLATION

UNCONTROLLED COPY WHEN DOWNLOADED OR PRINTED

Visit www.enstromhelicopter.com for instructions to order an original manual and to register for email notification of updates.

FIGURE 3-7. TAILCONE INSTALLATION

ITEM NUMBER	PART NUMBER	DESCRIPTION	QTY PER ASSY	EFFECTIVITY		
				TH-28	480	480B
1*	4112000-7	. Tailcone Assembly	1	X		
1	4112000-9	. Tailcone Assembly	1	X	X	
1	4112000-103	. Tailcone Assembly	1	X	X	X
2	NAS146DH-24	. Bolt	1	X	X	X
3	MS20002-C6	. Washer	5	X	X	X
4	NAS146DH-22	. Bolt	2	X	X	X
5**	3/8 Harper	. Washer, Flat	A/R	X	X	
6	4112025-11	. Shim Tailcone	A/R			X
7	4112025-13	. Shim Tailcone	A/R			X
8	4112025-15	. Shim Tailcone	A/R			X
9	4112025-17	. Shim Tailcone	A/R			X
10	4112025-19	. Shim Tailcone	A/R			X
11	MS20995C32	. Safety Wire	A/R			X

* TH-28, S/N 3004 & 3005

** Refer to maintenance manual for use of this washer as a shim.

UNCONTROLLED COPY WHEN DOWNLOADED OR PRINTED

Visit www.enstromhelicopter.com for instructions to order an original manual and to register for email notification of updates.

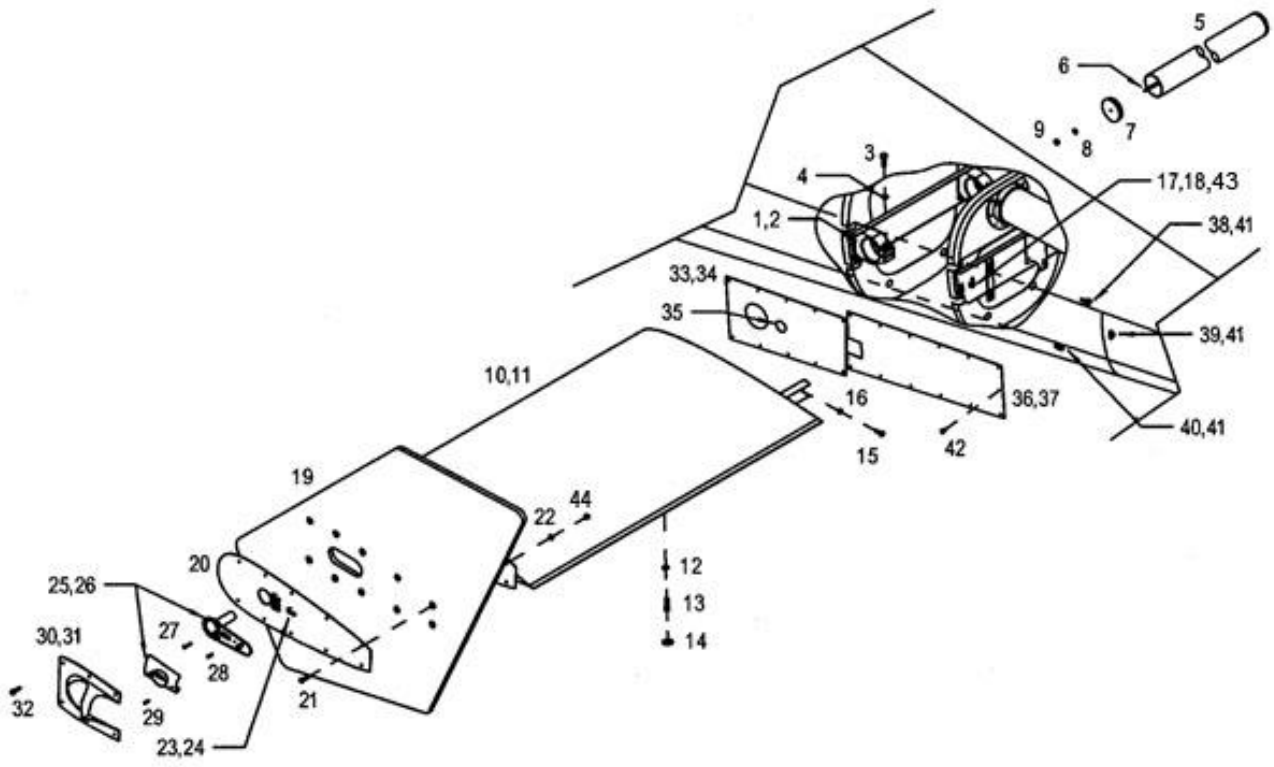

L/H Shown

FIGURE 3-8. HORIZONTAL AND VERTICAL STABILIZER INSTALLATION

UNCONTROLLED COPY WHEN DOWNLOADED OR PRINTED

Visit www.enstromhelicopter.com for instructions to order an original manual and to register for email notification of updates.

FIGURE 3-8. HORIZONTAL AND VERTICAL STABILIZER INSTALLATION

ITEM NUMBER	PART NUMBER	DESCRIPTION	QTY PER ASSY	EFFECTIVITY		
				TH-28	480	480B
–	4200000-101	Horizontal/Vertical Stabilizer Instl	REF		X	X
1	4112004-1	. Spar Fitting Assembly	2	X	X	X
2	MS20470AD5-7	. Rivet	8	X	X	
2*	HL18PB70-5-5	. Hi Lok Assembly	8	X	X	X
3	AN4-10A	. Bolt	2	X	X	X
4●	NAS1149F0463P	. Washer				
4	AN960-416	. Washer (Superseded by NAS114F0463P)	2	X	X	X
4●	NAS1149F0432P	. Washer (Alternate)				
4	AN960-416L	. Washer (Alternate) (Superseded by NAS114F0432P)	2	X	X	X
5	4200002-11	. Spar	2	X	X	X
6	4200009-13	. Threaded Rod	2	X	X	X
7	4200009-11	. End Plug	2	X	X	X
8	AN960-10L	. Washer	2	X	X	X
9	AN365-1032A	. Lock Nut	2	X	X	X
–	4200000-9	. Horizontal/Vertical Stabilizer Assembly L/H	REF	X	X	X
10	4200000-103	. . Horizontal Stabilizer Assembly L/H	1	X	X	X
–	4200000-10	. Horizontal/Vertical Stabilizer Assembly R/H	REF	X	X	X
11	4200000-104	. . Horizontal Stabilizer Assembly R/H	1	X	X	X
12	NAS1149F0432P	. Washer	6	X	X	X
13	MS16998-46	. Cap Screw	6	X	X	X
14	BPF-1/2	. Cap Plug	6	X	X	X
15	AN3-4A	. Bolt	4	X	X	X
16●	NAS1149F0363P	. Washer	4	X	X	X
16	AN960-10	. Washer (Superseded by NAS1149F0363P)	4	X	X	X
17	MS21081-3	. Nut Plate	4	X	X	X
18	MS20426AD3-5	. Rivet	4	X	X	X
19	4200011-7	. Vertical Stabilizer Assembly	2	X	X	X
20	4200008-11	. End Plate	2	X	X	X
21	AN525-10R12	. Screw	8	X	X	X
21**	AN525-10R14	. Screw	8	X	X	X
22●	NAS1149D0316J	. Washer				
22	AN960PD10L	. Washer (Superseded by NAS1149D0316J)	20	X	X	X
23●	MS21078-06	. Nut Plate				
23***	NAJ1-62	. Nut Plate (Superseded by MS21078-06)	6	X	X	X
23	MS21080-06	. Nut Plate (Superseded by NAJ1-62)	6	X	X	X

UNCONTROLLED COPY WHEN DOWNLOADED OR PRINTED

Visit www.enstromhelicopter.com for instructions to order an original manual and to register for email notification of updates.

FIGURE 3-8. HORIZONTAL AND VERTICAL STABILIZER INSTALLATION

ITEM NUMBER	PART NUMBER	DESCRIPTION	QTY PER ASSY	EFFECTIVITY		
				TH-28	480	480B
24	MS20426AD3-4	. Rivet	12	X	X	X
25	01-0790006-03	. Red Forward Position Light, Clear Tail Position Light, and Clear Anti-Collision Light Assembly (Reference)	1	X	X	X
25	01-0790340-04	. LED Red Forward Position Light, LED Clear Tail Position Light, and Strobe Anti-Collision Light Assembly (Reference) Alternate	1	X	X	X
25	A600-PR-28	. Position/Strobe Light Assembly L/H Red (Reference) Alternate	1	X	X	X
26	01-0790006-01	. Green Forward Position Light, Clear Tail Position Light, and Clear Anti-Collision Light Assembly (Reference)	1	X	X	X
26	01-0790340-03	. LED Green Forward Position Light, LED Clear Tail Position Light, and Strobe Anti-Collision Light Assembly (Reference) Alternate	1	X	X	X
26	A600-PG-28	. Position/Strobe Light Assembly R/H Green (Reference) Alternate	1	X	X	X
27	AN525-632R10	. . Screw (Reference)	4	X	X	X
28	AN507-632R7	. . Screw (Reference)	2	X	X	X
29	AN507-632R4	. . Screw (Reference)	2	X	X	X
30	4200017-1	. Light Shield, L/H	1	X	X	X
31	4200017-2	. Light Shield, R/H	1	X	X	X
32	AN525-10R14	. Screw	12	X	X	X
33	4112003-11	. Side Closure L/H	1	X	X	X
34	4112003-12	. Side Closure R/H	1	X	X	X
35	MS35489-20	. Grommet	2	X	X	X
36	4112003-13	. Side Closure L/H	1	X	X	X
37	4112003-14	. Side Closure R/H	1	X	X	X
38	28-11237-11	. Nut Plate	8	X	X	X
39	22NA1-82	. Anchor Nut	2	X	X	X
40	22NA1-82BC	. Anchor Nut	32	X	X	X
41	CCR264SS-3-3	. Rivet	84	X	X	X
42	AN525-832R6	. Screw	A/R	X	X	X
42	AN525-832R7	. Screw	A/R	X	X	X
42	AN525-832R8	. Screw	A/R	X	X	X
43●●	4200000-( )	. Shim	A/R	X	X	X
44†	AN364-1032A	. Lock Nut	20	X	X	X

* 480 S/N 5020 and subsequent, TH-28 S/N 3007 and subsequent. Retrofittable to earlier S/N aircraft, refer to Service Information Letter T-008.

UNCONTROLLED COPY WHEN DOWNLOADED OR PRINTED

Visit www.enstromhelicopter.com for instructions to order an original manual and to register for email notification of updates.

** 480 S/N 5125 and subsequent.

† 480 S/N 5148 and subsequent.

*** Effectivity 480B S/N 5158 and subsequent. Retrofittable to 480 S/N 5100-5141, 480B S/N 5042 and subsequent.

● Effectivity 480B S/N 4197 and subsequent. Retrofittable to 480 S/N 5001-5041, 480B S/N 5042 and subsequent.

●● Shim between Stabilizer Assembly and MS21078-06 nut plate as needed. (-19 to -33 shims)

UNCONTROLLED COPY WHEN DOWNLOADED OR PRINTED

Visit www.enstromhelicopter.com for instructions to order an original manual and to register for email notification of updates.

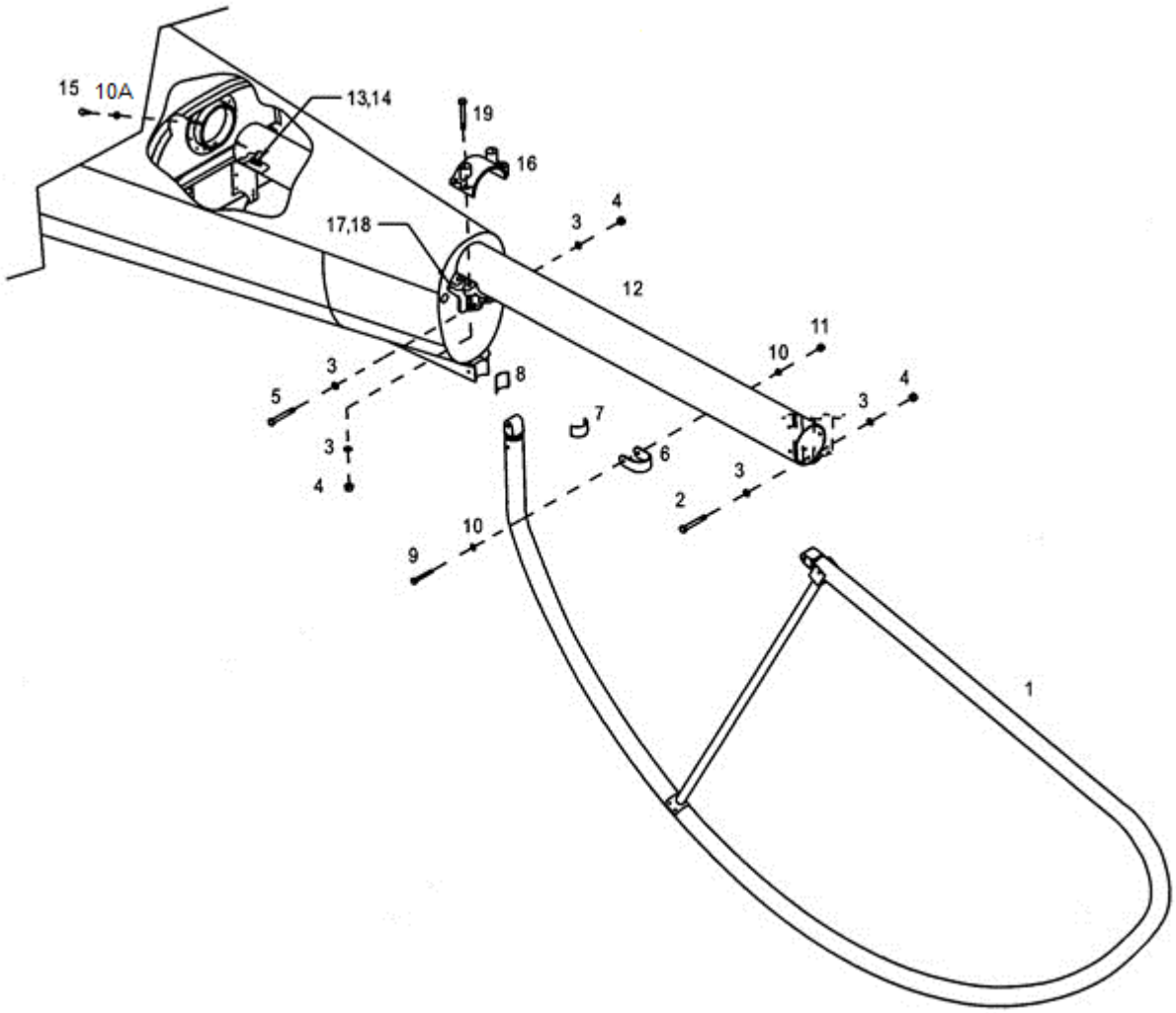

FIGURE 3-9. TAIL ROTOR GUARD AND EXTENSION TUBE INSTALLATION

UNCONTROLLED COPY WHEN DOWNLOADED OR PRINTED

Visit www.enstromhelicopter.com for instructions to order an original manual and to register for email notification of updates.

FIGURE 3-9. TAIL ROTOR GUARD AND EXTENSION TUBE INSTALLATION

ITEM NUMBER	PART NUMBER	DESCRIPTION	QTY PER ASSY	EFFECTIVITY		
				TH-28	480	480B
1	4172000-101	. Tail Rotor Guard Installation (See Figure 3-10 for breakdown)	1	X	X	X
1	4172000-9	. Tail Rotor Guard Installation (Obsolete) See Figure 3-11 for breakdown.	1	X	X	
2	AN4-22A	. Bolt	1	X	X	X
3**	NAS1149F0432P	. Washer	6	X	X	X
3	AN960-416L	. Washer (Superseded by NAS1149F0432P)	8	X	X	X
4**	MS21044N4	. Nut	2	X	X	X
4	AN365-428A	. Nut (Superseded by MS21044N4)	6	X	X	X
5	AN4-17A	. Bolt	1	X	X	X
6	28-17205-1	. Clamp Assembly	1	X	X	X
7	28-17206-13	. Pad	1	X	X	X
8	28-17200-15	. Pad	1	X	X	
8*	4112034-15	. Pad	1	X	X	X
9	AN3-17A	. Bolt	1	X	X	X
10	NAS1149F0332P	. Washer	2	X	X	X
10A	NAS1149D0316H	. Washer	3	X	X	X
11	MS21044N3	. Nut	2	X	X	X
12	4112011-5	. Extension Tube Assembly	1	X	X	X
13	MS21080-3	. . Nut Plate	3	X	X	X
14	MS20426AD3-5	. . Rivet	6	X	X	X
15	AN3-5A	. Bolt	3	X	X	X
16**	28-11217-3	. Clamp Assembly, Upper	1		X	X
16	28-11217-1	. Clamp (Superseded by 28-11217-3)	1	X	X	X
17**	28-11215-11	. Clamp, Lower	1		X	X
17	28-11215-1	. Clamp (Superseded by 28-11215-11)	1	X	X	X
18	MS20470AD4-6	. Rivet	7	X	X	X
19	AN4-21A	. Bolt	4	X	X	X

* Used with tailcone vibration absorber installation.

** Effectivity 480B S/N 5198 and subsequent. Retrofittable to 480 S/N 5001 and subsequent, 480B S/N 5042 and subsequent.

UNCONTROLLED COPY WHEN DOWNLOADED OR PRINTED

Visit www.enstromhelicopter.com for instructions to order an original manual and to register for email notification of updates.

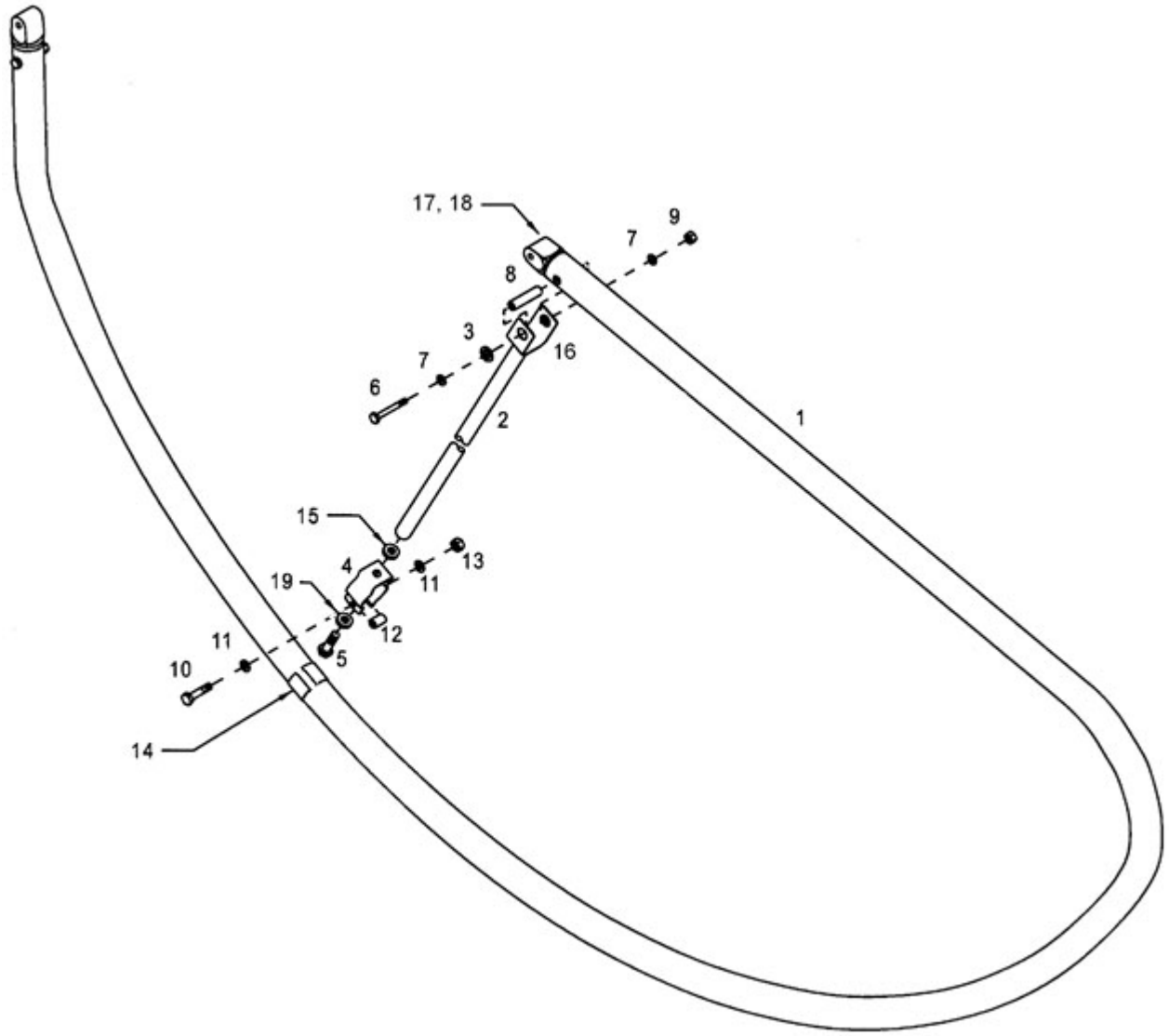

FIGURE 3-10. TAIL ROTOR GUARD ASSEMBLY (4172000-101)

UNCONTROLLED COPY WHEN DOWNLOADED OR PRINTED

Visit www.enstromhelicopter.com for instructions to order an original manual and to register for email notification of updates.

FIGURE 3-10. TAIL ROTOR GUARD ASSEMBLY (4172000-101)

ITEM NUMBER	PART NUMBER	DESCRIPTION	QTY PER ASSY	EFFECTIVITY		
				TH-28	480	480B
–	4172000-101	Tail Rotor Guard Installation	REF	X	X	X
1†	4172001-5	. Tail Rotor Guard Assembly			X	X
1	4172001-1	. Tail Rotor Guard Assembly (Superseded by 4172001-5)	1	X	X	X
2	4172001-3	. Tail Rotor Guard Strut	1	X	X	X
3	NAS77A6–007	. . Bushing	2	X	X	X
4	28-17208-11	. . Clamp	1	X	X	X
5	NP5-4A	. . Bolt	1	X	X	X
5	NP5-6A	. . Bolt (Superseded by NP5-4A)	1	X	X	X
6	AN3-20A	. Bolt	1	X	X	X
7	NAS1149F0363P	. Washer	2	X	X	X
8	NAS73-3E108	. Bushing	1	X	X	X
9	MS21044N3	. Nut	1	X	X	X
9	AN365-1032A	. Nut (Superseded by MS21044N3)	1	X	X	X
10	AN4-11A	. Bolt	1	X	X	X
11	NAS1149F0432P	. Washer	2	X	X	X
12	28-17206-17	. Spacer	1	X	X	X
13	MS21083N4	. Nut	1	X	X	X
14*	28-17206-13	. Pad	2	X	X	X
15**	28-17206-11	. Spacer	A/R	X	X	X
–	EA9309NA	. Adhesive: Structural Epoxy	A/R	X	X	X
16	28-17206-19	. Bracket, T.R Guard, Strut	1	X	X	X
17†	28-17203-11	. Fitting	2		X	X
17	28-17203-1	. Fitting (Superseded by 28-17203-11)	2	X	X	X
18	CR3213-4-03	. Rivet	4	X	X	X
19	NAS1149F0563P	. Washer	1	X	X	X

* Pads are bonded to inside of clamp, Item 4.

** Installed as required to fit Strut Assembly onto the tail rotor guard. Increase length of bolt, Item 5, as required.

† Effectivity 480B S/N 5200 and subsequent. Retrofittable to 480 S/N 5001 and subsequent, 480B S/N 5042 and subsequent.

UNCONTROLLED COPY WHEN DOWNLOADED OR PRINTED

Visit www.enstromhelicopter.com for instructions to order an original manual and to register for email notification of updates.

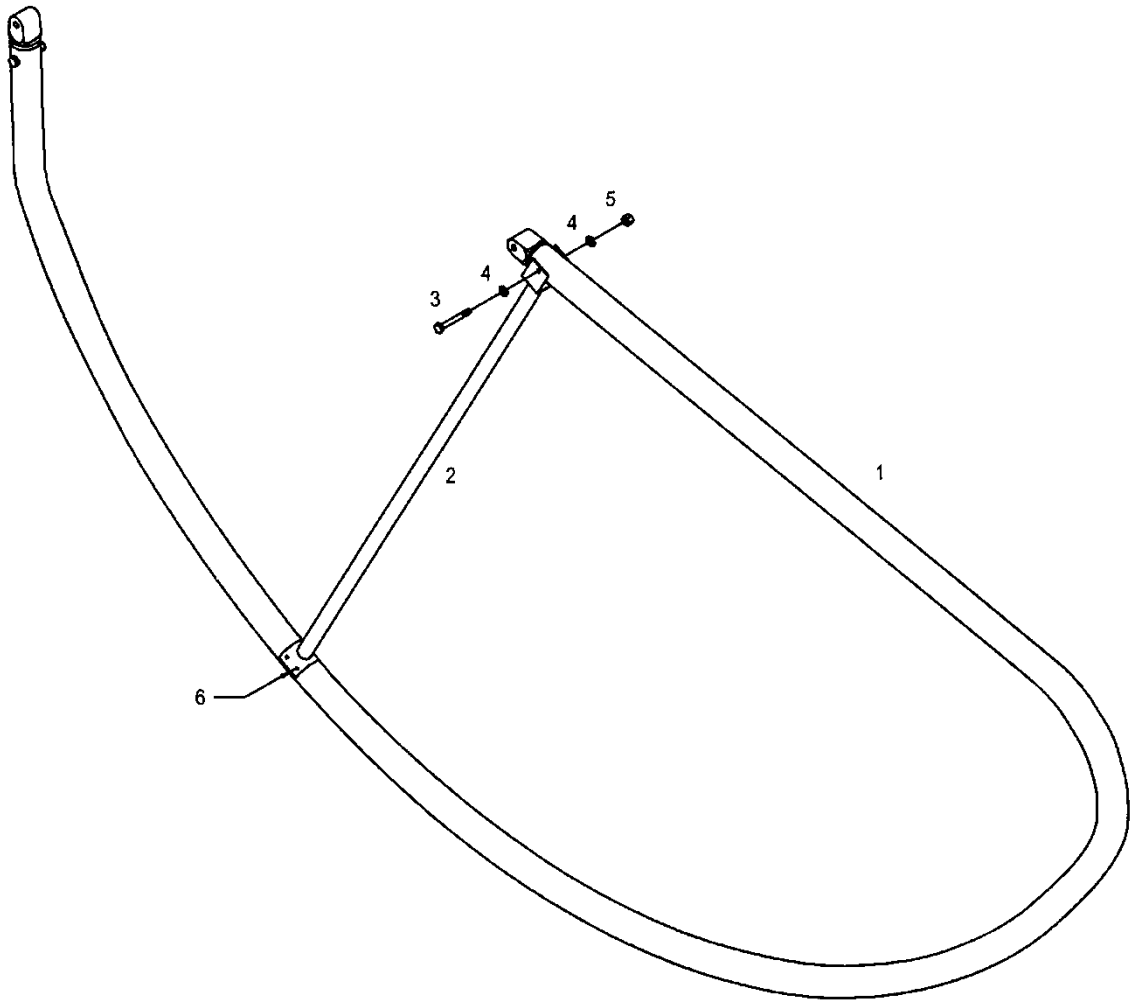

Obsolete

FIGURE 3-11. TAIL ROTOR GUARD INSTALLATION (4172000-9)

UNCONTROLLED COPY WHEN DOWNLOADED OR PRINTED

Visit www.enstromhelicopter.com for instructions to order an original manual and to register for email notification of updates.

FIGURE 3-11. TAIL ROTOR GUARD ASSEMBLY (4172000-9)

ITEM NUMBER	PART NUMBER	DESCRIPTION	QTY PER ASSY	EFFECTIVITY		
				TH-28	480	480B
– *●	4172000-9	Tail Rotor Guard Installation (Obsolete) (See Fig. 3-9 for next higher assembly.)	1	X	X	
1	4172000-5	. Tail Rotor Guard Assembly	1	X	X	
2	4172000-7	. Strut Assembly	1	X	X	
3	AN3-15A	. Bolt	1	X	X	
4	AN960-10L	. Washer	2	X	X	
5	AN365-1032A	. Nut	1	X	X	
6	CR3213-4-02	. Rivet	4	X	X	

* Used on TH-28, S/N 3004 thru 3006, and 480, S/N 5001 thru 5012.

● Use 4172000-101 Installation for latest configuration (Figure 3-10).

UNCONTROLLED COPY WHEN DOWNLOADED OR PRINTED

Visit www.enstromhelicopter.com for instructions to order an original manual and to register for email notification of updates.

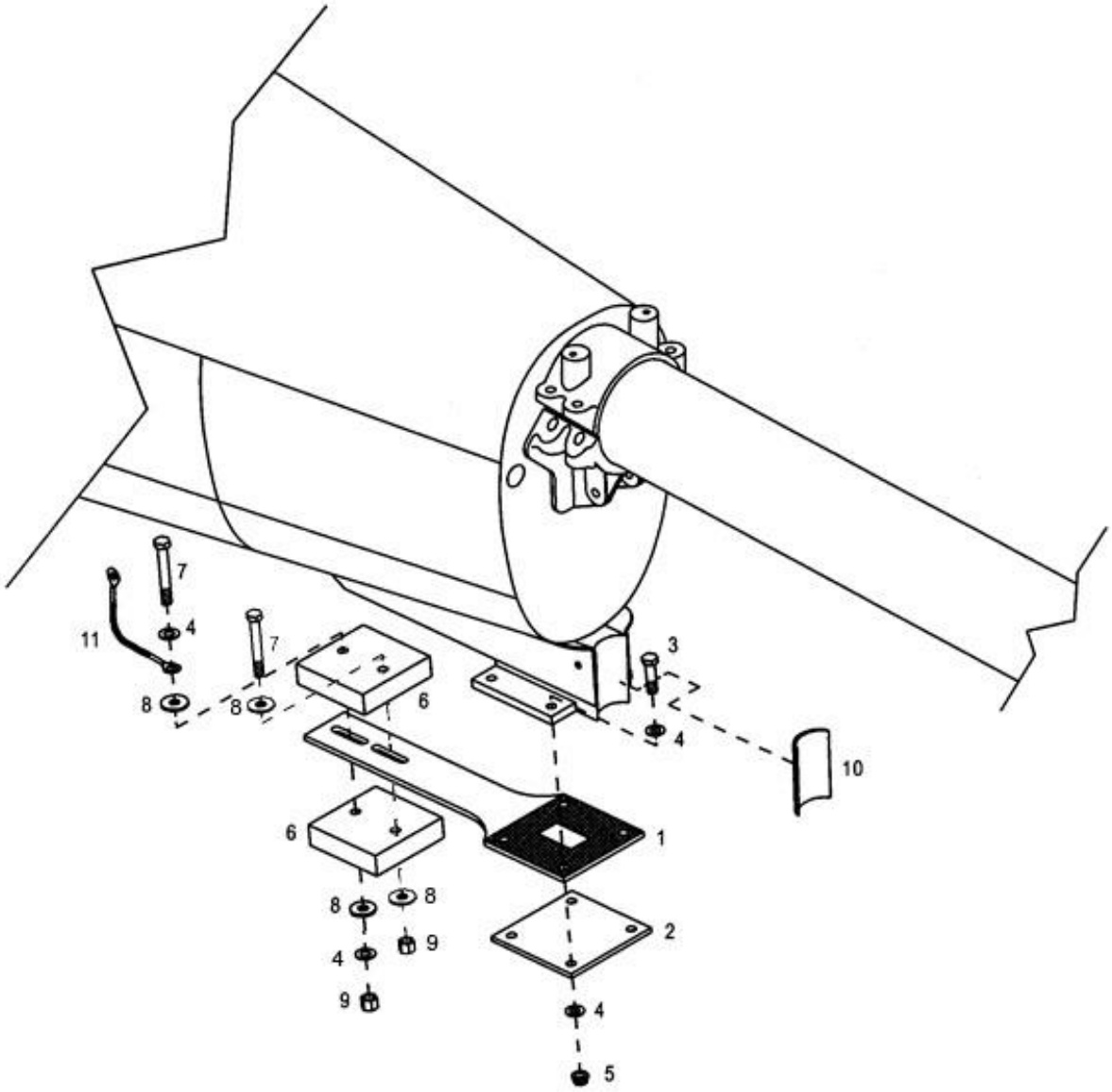

Sheet 1 of 2

FIGURE 3-12. TAILCONE VIBRATION ABSORBER INSTALLATION

UNCONTROLLED COPY WHEN DOWNLOADED OR PRINTED

Visit www.enstromhelicopter.com for instructions to order an original manual and to register for email notification of updates.

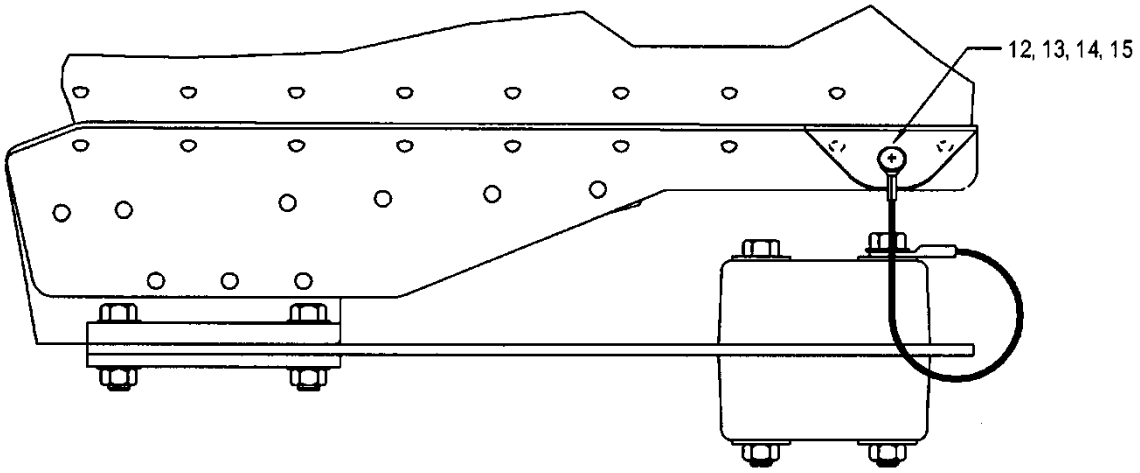

VIEW LOOKING FROM RIGHT SIDE

Sheet 2 of 2

FIGURE 3-12. TAILCONE VIBRATION ABSORBER INSTALLATION

UNCONTROLLED COPY WHEN DOWNLOADED OR PRINTED

Visit www.enstromhelicopter.com for instructions to order an original manual and to register for email notification of updates.

FIGURE 3-12. TAILCONE VIBRATION ABSORBER INSTALLATION

ITEM NUMBER	PART NUMBER	DESCRIPTION	QTY PER ASSY	EFFECTIVITY		
				TH-28	480	480B
1†	4112034-3	. Beam Assembly – Vibration Dampening Detail	1	X	X	X
–	4112034-11	. . Beam	REF	X	X	X
–	5453	. . Teflon Tape	REF	X	X	X
–	4112034-37	. . Label	REF	X	X	X
2	4112034-23	. Backing Plate – Vibration Dampening Detail	1	X	X	X
3	NAS6204-9	. Bolt	4	X	X	X
4*	NAS1149F0432P	. Washer	9	X	X	X
4	AN960-416L	. Washer (Superseded by NAS1149F0432P)	9	X	X	X
5	MS21042-4	. Nut	4	X	X	X
6	4112034-25	. Weight – Vibration Dampening Detail	2	X	X	X
6	4112034-13	. Weight (Obsolete)	2	X	X	X
7*	NAS6604-23	. Bolt (Used with 4112034-25)	1	X	X	X
7	AN4-17A	. Bolt (Used with 4112034-25) (Superseded by NAS6604-23)	1	X	X	X
7*	NAS6604-25	. Bolt (Used with 4112034-25 & 4112035-5)	1	X	X	X
7	AN4-20A	. Bolt (Used with 4112034-25 & 4112035-5) (Superseded by NAS6604-25)	1	X	X	X
7	AN4-25A	. Bolt (Used with 4112034-13)	1	X	X	X
7	AN4-26A	. Bolt (Used with 4122034-13 & 4112035-5)	1	X	X	X
8	ECD050-11	. Washer, Flat	4	X	X	X
9	MS20500-428	. Nut	2	X	X	X
10	4112034-15	. Pad – Vibration Dampening Detail	1	X	X	X
11	4112035-5	. Lanyard – Vibration Dampening Detail	1	X	X	X
12	MS27039-1-11	. Screw	1	X	X	X
13*	NAS1149F0332P	. Washer	1	X	X	X
13	AN960-10L	. Washer (Superseded by NAS1149F0332P)	1	X	X	X
14*	NAS1149F0363P	. Washer	1	X	X	X
14	AN960-10	. Washer (Superseded by NAS1149F0363P)	2	X	X	X
15*	MS21083N3	. Nut	1	X	X	X
15	AN364-1032A	. Nut (Superseded by MS21083N3)	1	X	X	X

Note: The vibration absorber may only be installed on Tailcone Assembly, P/N 4112000-103 or after modification of the tailcone in accordance with Vibration Absorber Kit Number 4230018-1, 4230018-3, or 4230018-7.

† This assembly includes life limited detail part number 4112034-11. See Table 3-1 of the TH-28/480 Series Maintenance Manual.

* Effectivity 480B S/N 5214 and subsequent. Retrofittable to 480B S/N 5042 and subsequent.

UNCONTROLLED COPY WHEN DOWNLOADED OR PRINTED

Visit www.enstromhelicopter.com for instructions to order an original manual and to register for email notification of updates.

INTENTIONALLY LEFT BLANK

UNCONTROLLED COPY WHEN DOWNLOADED OR PRINTED

Visit www.enstromhelicopter.com for instructions to order an original manual and to register for email notification of updates.

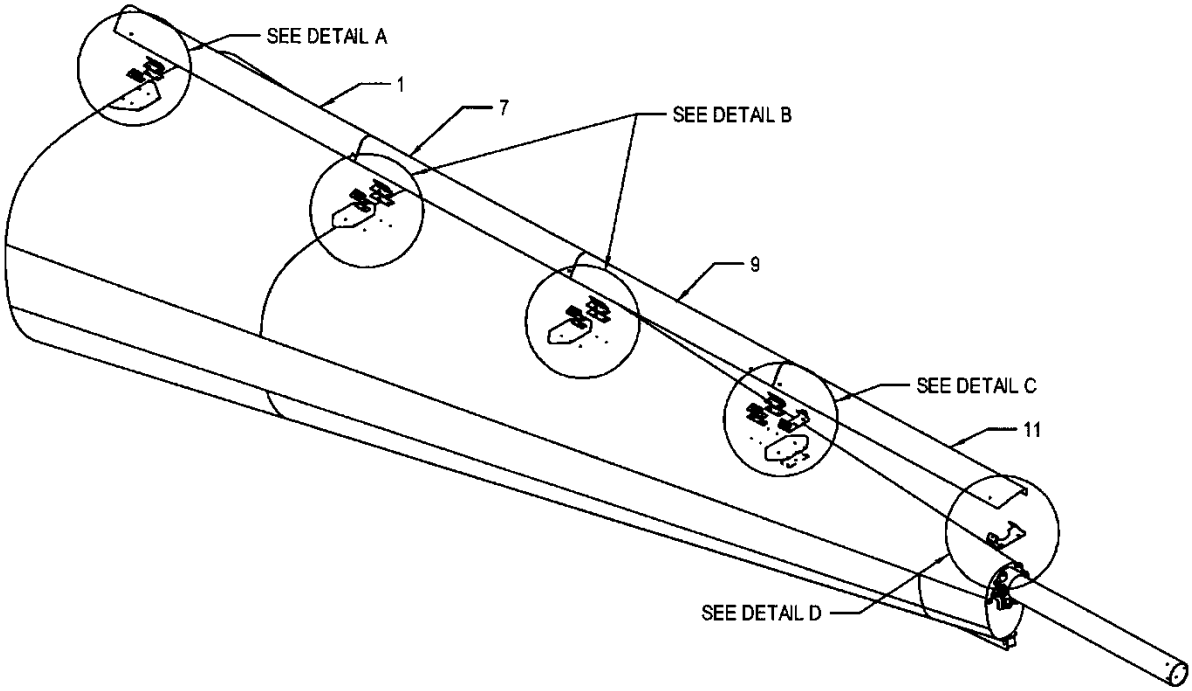

Sheet 1 of 3

FIGURE 3-13. TAIL ROTOR DRIVE SHAFT COVER INSTALLATION

UNCONTROLLED COPY WHEN DOWNLOADED OR PRINTED

Visit www.enstromhelicopter.com for instructions to order an original manual and to register for email notification of updates.

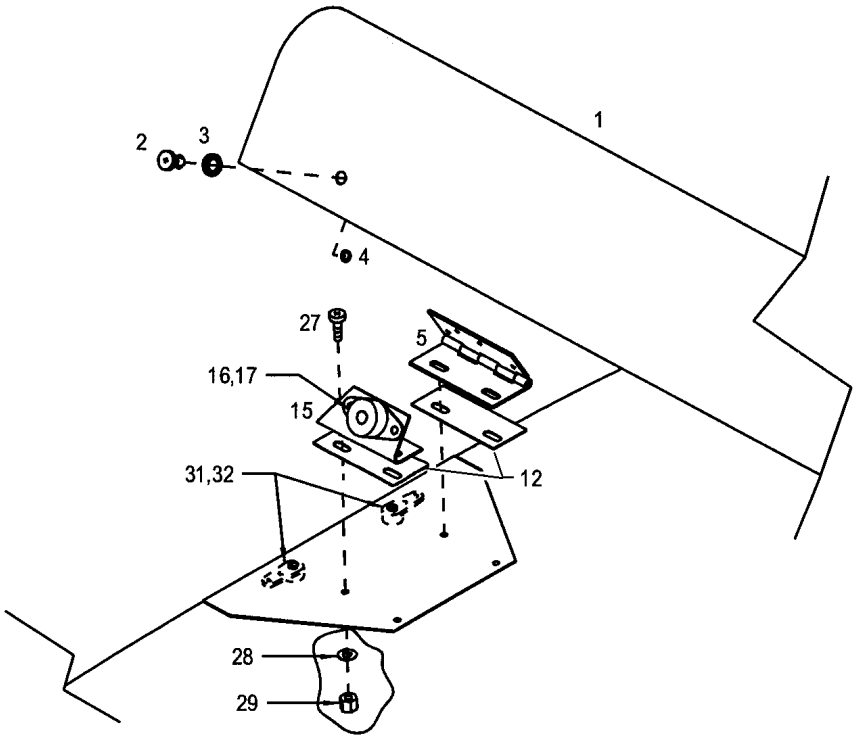

DETAIL A

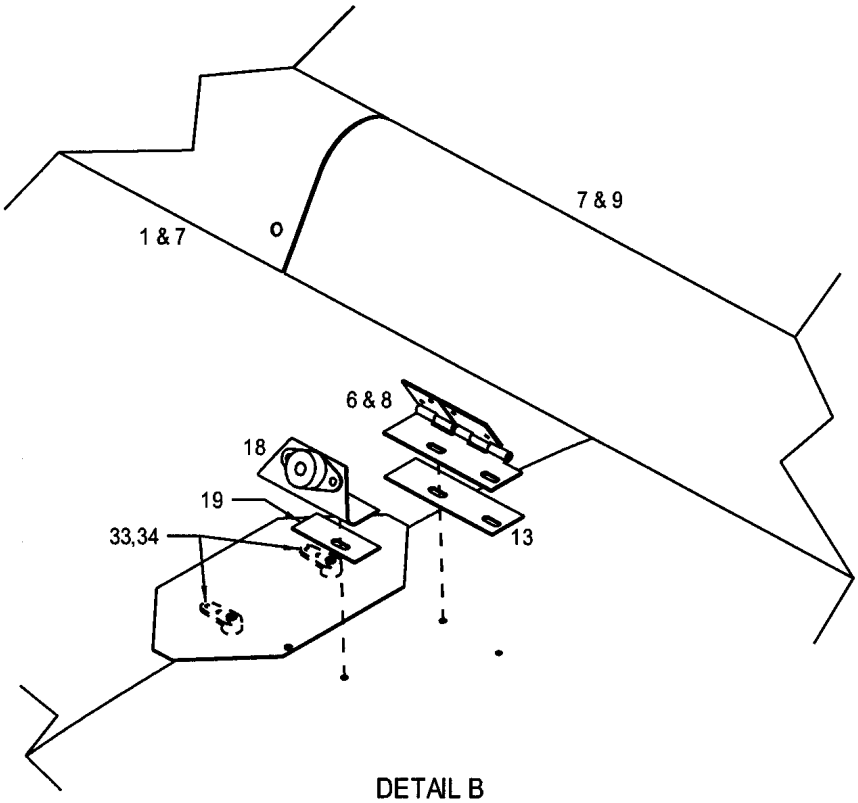

DETAIL B

Sheet 2 of 3

FIGURE 3-13. TAIL ROTOR DRIVE SHAFT COVER INSTALLATION

UNCONTROLLED COPY WHEN DOWNLOADED OR PRINTED

Visit www.enstromhelicopter.com for instructions to order an original manual and to register for email notification of updates.

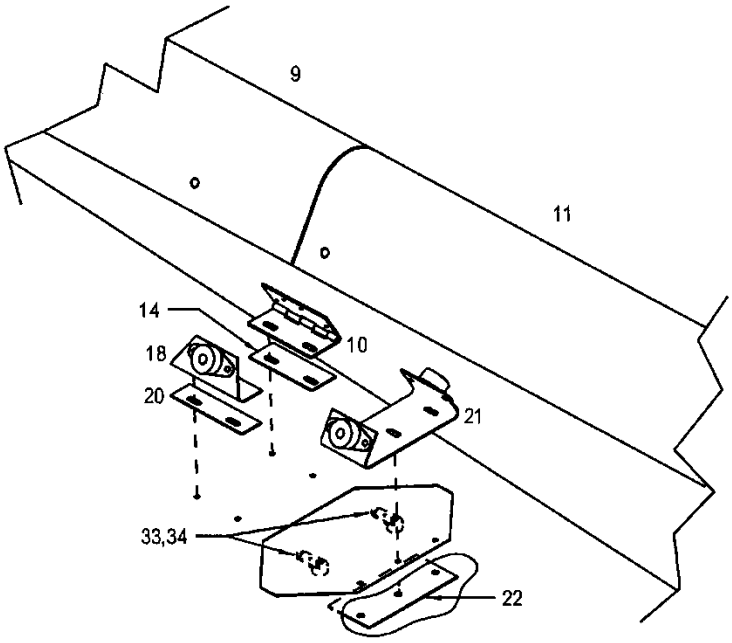

DETAIL C

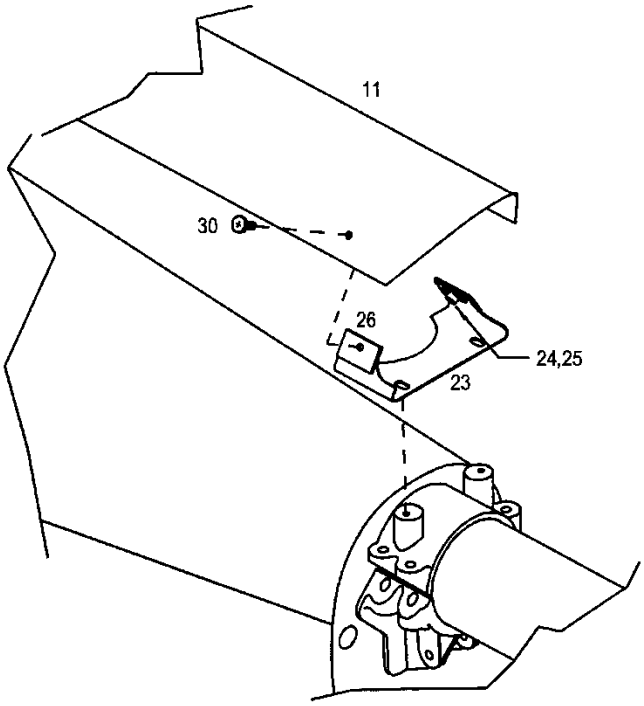

DETAIL D

Sheet 3 of 3

FIGURE 3-13. TAIL ROTOR DRIVE SHAFT COVER INSTALLATION

UNCONTROLLED COPY WHEN DOWNLOADED OR PRINTED

Visit www.enstromhelicopter.com for instructions to order an original manual and to register for email notification of updates.

FIGURE 3-13. TAIL ROTOR DRIVE SHAFT COVER INSTALLATION

ITEM NUMBER	PART NUMBER	DESCRIPTION	QTY PER ASSY	EFFECTIVITY		
				TH-28	480	480B
1	28-11239-1	. Cover Assembly, #1	1	X	X	X
2	82-19-160-16	. . Fastener	2	X	X	X
–	43-13-1-24	. . Spring Ejector	2	X	X	X
3	82-46-101-39	. . Wear Washer	2	X	X	X
4	82-32-101-20	. . Retainer, Ring, Split	2	X	X	X
5	28-11227-13	. . Hinge	1	X	X	X
–	MS20253-P2	. . . Hinge Pin, 6 inches	1	X	X	X
–	28-11239-35	. . Doubler	1	X	X	X
6†	28-11227-17	. . Hinge	2		X	X
–	28-11227-19	. . Hinge	1		X	X
–	28-11227-23	. . Hinge - Pin	1		X	X
6*	28-11227-15	. . Hinge (Obsolete)	1	X	X	X
–	MS20253-P2	. . . Hinge Pin, 6 inches	1	X	X	X
–	28-11239-37	. . Doubler	1	X	X	X
–	MS20426A3-4	. . Rivet	6	X	X	X
7	28-11239-3	. Cover Assembly, #2	1	X	X	X
–	82-19-160-16	. . Fastener	1	X	X	X
–	43-13-1-24	. . Spring Ejector	1	X	X	X
–	82-46-101-39	. . Wear Washer	1	X	X	X
–	82-32-101-20	. . Retainer, Ring, Split	1	X	X	X
8†	28-11227-21	. . Hinge	2		X	X
–	28-11227-19	. . Hinge	1		X	X
–	28-11227-23	. . Hinge - Pin	1		X	X
8*	28-11227-15	. . Hinge (Obsolete)	1	X	X	X
–	MS20253-P2	. . . Hinge Pin, 6 inches	1	X	X	X
–	28-11239-39	. . Doubler	1	X	X	X
–	MS20426A3-4	. . Rivet	4	X	X	X
9	28-11239-9	. Cover Assembly, #3	1	X	X	X
–	82-19-160-16	. . Fastener	1	X	X	X
–	43-13-1-24	. . Spring Ejector	1	X	X	X
–	82-46-101-39	. . Wear Washer	1	X	X	X
–	82-32-101-20	. . Retainer, Ring, Split	1	X	X	X
10	28-11227-13	. . Hinge	1	X	X	X
–	MS20253-P2	. . . Hinge Pin, 6 inches	1	X	X	X
–	28-11239-35	. . Doubler	1	X	X	X
–	MS20426A3-4	. . Rivet	6	X	X	X
11	28-11239-101	. Cover Assembly, #4	1	X	X	X

UNCONTROLLED COPY WHEN DOWNLOADED OR PRINTED

Visit www.enstromhelicopter.com for instructions to order an original manual and to register for email notification of updates.

FIGURE 3-13. TAIL ROTOR DRIVE SHAFT COVER INSTALLATION

ITEM NUMBER	PART NUMBER	DESCRIPTION	QTY PER ASSY	EFFECTIVITY		
				TH-28	480	480B
–	82-19-160-16	. . Fastener	2	X	X	X
–	43-13-1-24	. . Spring Ejector	2	X	X	X
–	82-46-101-39	. . Wear Washer	2	X	X	X
–	82-32-101-20	. . Retainer, Ring, Split	2	X	X	X
12	28-11236-15	. Doubler	2	X	X	X
13	28-11236-13	. Doubler	2	X	X	X
14	28-11236-21	. Doubler	1	X	X	X
15	28-11233-1	. Bracket Assembly	1	X	X	X
–	28-11231-11	. . Bracket	1	X	X	X
16	82-35-306-10	. . Receptacle	1	X	X	X
17	MS20470AD3-3	. . Rivet	2	X	X	X
18	28-11233-5	. Bracket Assembly	2	X	X	X
–	28-11233-13	. . Bracket	1	X	X	X
–	82-35-306-10	. . Receptacle	1	X	X	X
–	MS20470AD3-3	. . Rivet	2	X	X	X
19	28-11236-11	. Doubler	2	X	X	X
20	28-11236-17	. Doubler	1	X	X	X
21	28-11241-3	. Bracket Assembly	1	X	X	X
–	28-11241-13	. . Bracket	1	X	X	X
–	82-35-306-10	. . Receptacle	2	X	X	X
–	MS20470AD3-3	. . Rivet	4	X	X	X
22	28-11236-19	. Doubler	1	X	X	X
23	28-11238-1	. Bracket Assembly	1	X	X	X
–	28-11238-11	. . Bracket	1	X	X	X
24	NAS686A3K	. . Nut Plate	2	X	X	X
24	NAJ1-02BC	. . Nut Plate (Superseded by NAS686A3K)	2	X	X	X
25	MS20426AD3-3	. . Rivet	4	X	X	X
26	28-11238-13	. . Strip	2	X	X	X
27	AN526-832R8	. Screw	19	X	X	X
28	AN960-8L	. Washer	19	X	X	X
29	AN365-832A	. Nut	19	X	X	X
30	AN525-10R8	. Screw	2	X	X	X
31**	22NA17A-02	. Nut Plate	2	X	X	X
32	MS20426AD3-7	. Rivet	4	X	X	X
33**	28-11237-11	. Nut Plate	6	X	X	X
34	MS20426AD3-6	. Rivet	12	X	X	X

UNCONTROLLED COPY WHEN DOWNLOADED OR PRINTED

Visit www.enstromhelicopter.com for instructions to order an original manual and to register for email notification of updates.

* Hinge, P/N 28-11227-15, is a split hinge. The aft portion of the hinge half installed on drive shaft cover is installed on the drive shaft cover located aft of the hinge location.

** These nut plates secure the tail rotor drive shaft bearing housings.

† Hinge, P/N 28-11227-17, is one half of a split hinge installed on aft end of both 28-11239-1 and 28-11239-3. Hinge, P/N 28-11227-21, is the other half of the split hinge installed on forward end of 28-11239-3 and 28-11239-9. Hinge 28-11227-19 is the base hinge. This set up replaces the 28-11227-15 hinge.

UNCONTROLLED COPY WHEN DOWNLOADED OR PRINTED

Visit www.enstromhelicopter.com for instructions to order an original manual and to register for email notification of updates.

NO ILLUSTRATION AVAILABLE

FIGURE 3-14. SEAT INSTALLATION – TH-28

UNCONTROLLED COPY WHEN DOWNLOADED OR PRINTED

Visit www.enstromhelicopter.com for instructions to order an original manual and to register for email notification of updates.

FIGURE 3-14. SEAT INSTALLATION – TH-28

ITEM NUMBER	PART NUMBER	DESCRIPTION	QTY PER ASSY	EFFECTIVITY		
				TH-28	480	480B
–	4118788-13	. Seat Track (Pilot - Outboard)	1	X		
–	4118788-15	. Seat Track (Pilot & Copilot - Inboard)	2	X		
–	4118788-17	. Seat Track (Copilot - Outboard)	1	X		
–	MS27039-1-17	. Screw	41	X		
–	AN690-10	. Washer	55	X		
–	MS21042-3	. Nut	14	X		
–*	4114014-11	. Bracket, Pylon (Center Seat)	2	X		
–**	4114014-15	. Bracket, Pylon (Center Seat)	2	X		
–	4114014-13	. Bracket, Pylon (Center Seat, L/H)	1	X		
–	4114014-14	. Bracket, Pylon (Center Seat, R/H)	1	X		
–	ECD4019-1	. Seat Assembly (Pilot & Copilot)	2	X		
–	ECD4019-3	. Seat Assembly (Center)	1	X		
–	ECD4019-5	. Restraint System	3	X		
–	4119750-5	. Pin/Lanyard Assembly (Seat Legs - Front)	4	X		
–	4119750-7	. Pin/Lanyard Assembly (Seat Legs - Aft)	4	X		

* Serial Number 3006 only.

** Serial Number 3007 and Subsequent.

UNCONTROLLED COPY WHEN DOWNLOADED OR PRINTED

Visit www.enstromhelicopter.com for instructions to order an original manual and to register for email notification of updates.

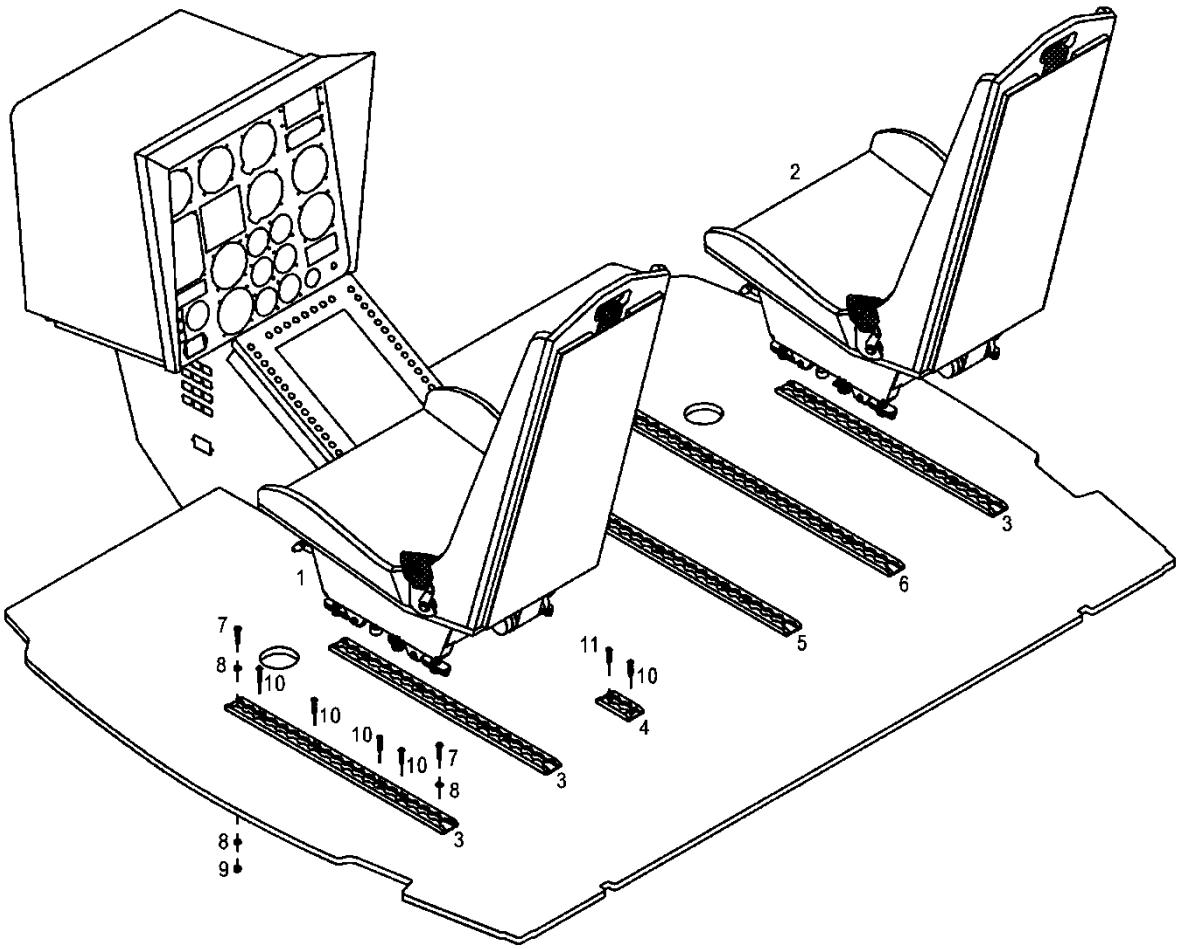

FIGURE 3-15. SEAT INSTALLATION – 480/480B

UNCONTROLLED COPY WHEN DOWNLOADED OR PRINTED

Visit www.enstromhelicopter.com for instructions to order an original manual and to register for email notification of updates.

FIGURE 3-15. SEAT INSTALLATION – 480/480B

ITEM NUMBER	PART NUMBER	DESCRIPTION	QTY PER ASSY	EFFECTIVITY		
				TH-28	480	480B
1	4119760-5	. Seat Assembly – Pilot (See Fig. 3-16 for breakdown)	1		X	X
2	4119760-3	. Seat Assembly - Copilot/Passenger (See Fig. 3-16 for breakdown)	1		X	X
3	4119764-33	. Seat Track	3		X	X
3*	4119764-19	. Seat Track (Obsolete, replace with 4119764-33)	3		X	
4	4119764-27	. Seat Track	1		X	X
4**	4119764-25	. Seat Track (Obsolete, replace with 4119764-27)	1		X	
5	4119764-31	. Seat Track	1		X	X
5*	4119764-23	. Seat Track (Obsolete, replace with 4119764-31)	1		X	
6	4119764-29	. Seat Track	1		X	X
6*	4119764-21	. Seat Track (Obsolete, replace with 4119764-29)	1		X	
7	MS27039-1-16	. Screw	10		X	X
8	AN960-10L	. Washer	12		X	X
9	AN365-1032A	. Nut	2		X	X
10≡	MS24694-S58	. Screw	25		X	X
11≡	MS24694-S51	. Screw	1		X	X

* Used on S/N 5001 thru 5013

** Used on S/N 5001 thru 5003

≡ See Appendix A for equivalent part information.

UNCONTROLLED COPY WHEN DOWNLOADED OR PRINTED

Visit www.enstromhelicopter.com for instructions to order an original manual and to register for email notification of updates.

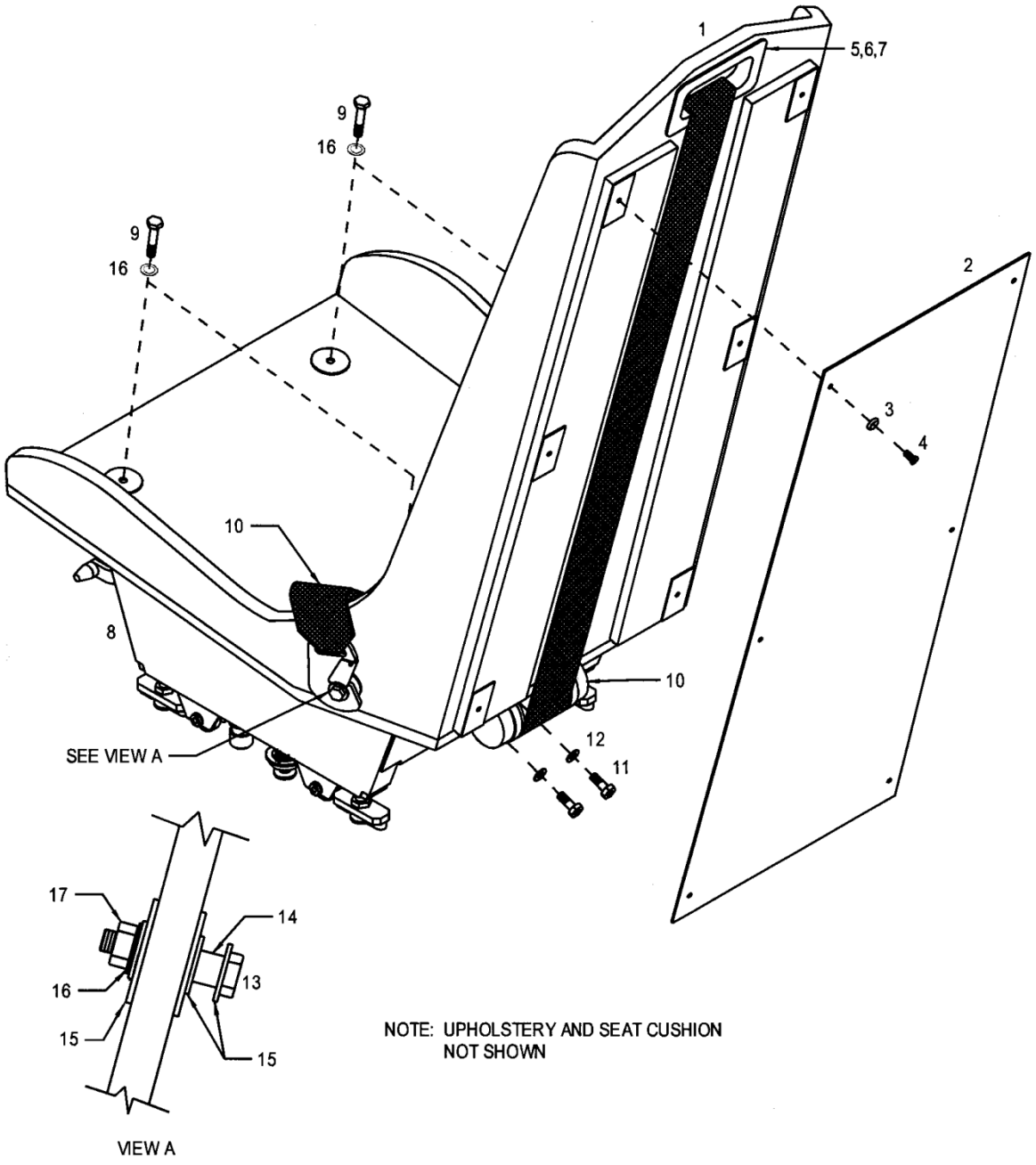

FIGURE 3-16. SEAT ASSEMBLY

UNCONTROLLED COPY WHEN DOWNLOADED OR PRINTED

Visit www.enstromhelicopter.com for instructions to order an original manual and to register for email notification of updates.

FIGURE 3-16. SEAT ASSEMBLY

ITEM NUMBER	PART NUMBER	DESCRIPTION	QTY PER ASSY	EFFECTIVITY		
				TH-28	480	480B
–	4119760-5	. Seat Assembly - Pilot	1		X	X
–	4119760-3	. Seat Assembly - Copilot/Passenger	1		X	X
–	4119849-901	. . Seat Bucket Assembly (Includes upholstery and cushions)	1		X	X
–	4119863-11	. . . Cushion - Bucket Center	1		X	X
–	4119878-11	. . . Cushion - Bucket Left Side	1		X	X
–	4119878-12	. . . Cushion - Bucket Right Side	1		X	X
1	4119762-5	. . . Seat Bucket	1		X	X
2	4119783-25	. . . Panel	1		X	X
3	601-6	. . . Washer	6		X	X
4	AN531-6R8	. . . Screw	6		X	X
5	4119765-19	. . . Plate	1		X	X
6	4119765-17	. . . Flanged Block	1		X	X
7	AN507-6R8	. . . Screw	4		X	X
8	4119849-903	. . Seat Base - Used with 4119760-5 (Includes upholstery) See Fig. 3-17 for breakdown.	1		X	X
8	4119849-902	. . Seat Base - Used with 4119760-3 (Includes upholstery) See Fig. 3-17 for breakdown.	1		X	X
9	NAS6604-13	. . Bolt	4		X	X
10	ECD4061-1	. . Restraint Assembly	1		X	X
11	NAS6204-5	. . Bolt	2		X	X
12	NAS1149D0463J	. . Washer	2		X	X
13	NAS6604-23	. . Bolt	2		X	X
14	4119780-23	. . Spacer	2		X	X
15	C102780	. . Washer, Flat	6		X	X
16	NAS1149F0432P	. . Washer	6		X	X
17	MS20364-428	. . Nut	2		X	X

UNCONTROLLED COPY WHEN DOWNLOADED OR PRINTED

Visit www.enstromhelicopter.com for instructions to order an original manual and to register for email notification of updates.

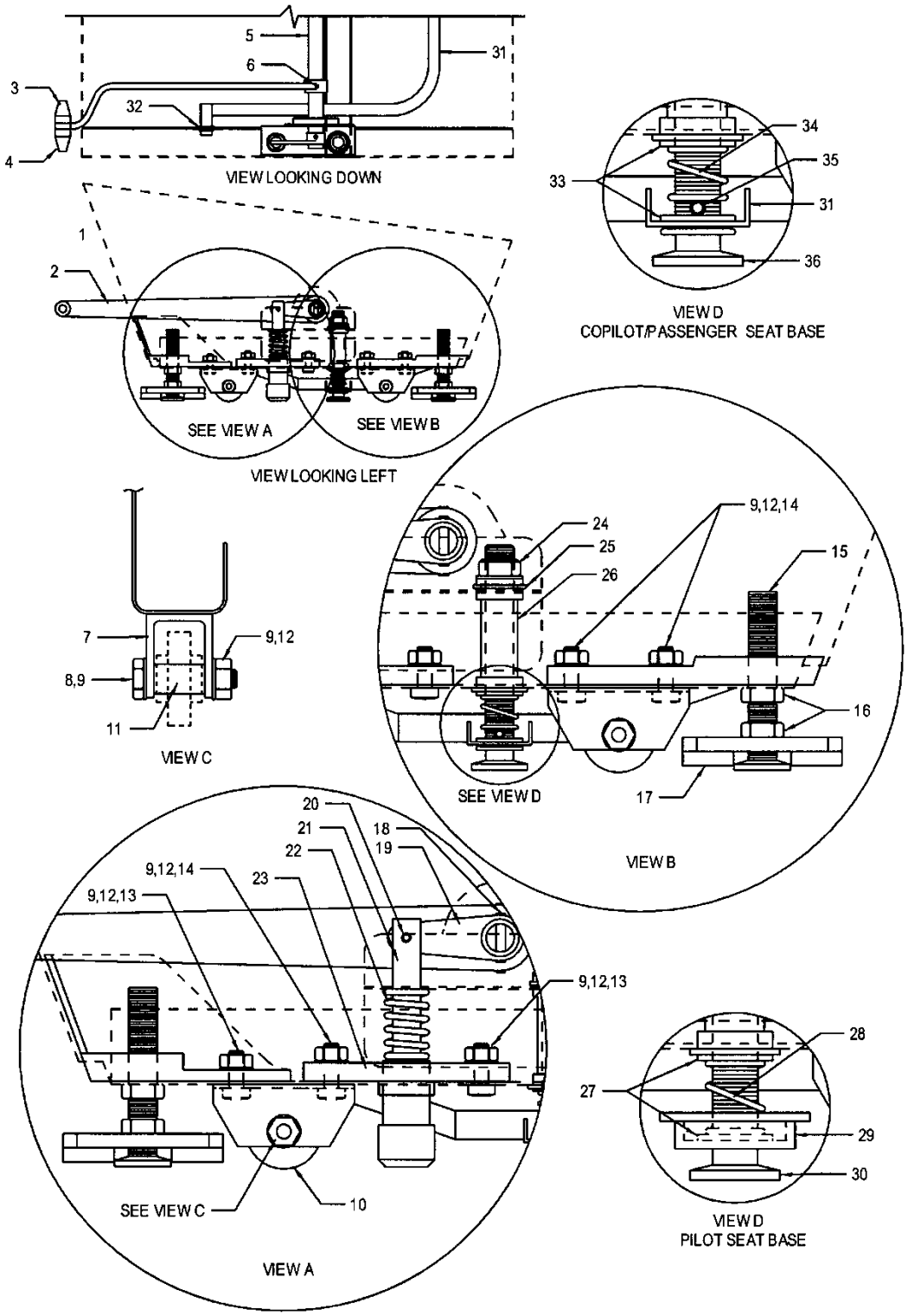

FIGURE 3-17. SEAT BASE ASSEMBLY

UNCONTROLLED COPY WHEN DOWNLOADED OR PRINTED

Visit www.enstromhelicopter.com for instructions to order an original manual and to register for email notification of updates.

FIGURE 3-17. SEAT BASE ASSEMBLY

ITEM NUMBER	PART NUMBER	DESCRIPTION	QTY PER ASSY	EFFECTIVITY		
				TH-28	480	480B
–	4119849-903	. Seat Base – Pilot (Includes Upholstery)	1		X	X
–	4119849-902	. Seat Base – Copilot/Passenger (Includes Upholstery)	1		X	X
–	4119743-11	. . Escutcheon Plate	1		X	X
–	AN531-6R12	. . Screw	4		X	X
1	4119761-7	. . Seat Base – Used with 4119849-903	1		X	X
1	4119761-5	. . Seat Base – Used with 4119849-902	1		X	X
2	4119785-21	. . . Handle	1		X	X
3	4119768-19	. . . Knob	1		X	X
4	4119768-21	. . . Knob	1		X	X
5	MS171535	. . . Roll Pin	1		X	X
6	4119789-19	. . . Tube	1		X	X
7	331008-2	. . . Channel	4		X	X
8	NAS1103-11	. . . Bolt	4		X	X
9	NAS1149D0316J	. . . Washer	18		X	X
10	331008-13	. . . Wheel	4		X	X
11	4119780-19	. . . Spacer	4		X	X
12	MS21083N3	. . . Nut	14		X	X
13	MS27039-1-09	. . . Screw	4		X	X
14	MS27039-1-11	. . . Screw	6		X	X
15	331281-29W	. . . Stud	4		X	X
16	AN316-6R	. . . Nut	8		X	X
17	4119746-17	. . . Guide	4		X	X
18	MS171531	. . . Roll Pin	2		X	X
19	4119785-15	. . . Bellcrank	2		X	X
20	MS171527	. . . Roll Pin	2		X	X
21	4119788-15	. . . Plunger	2		X	X
22	C0600-063-1250-M	. . . Spring	2		X	X
23*	4119758-23	. . . Fitting, Bushing	2		X	X
23	4119758-21	. . . Fitting, Bushing (Superseded by 4119758-23	2		X	X
24	MS21083N6	. . . Nut	2		X	X
25	5103-62	. . . Retaining Ring	2		X	X
26	4119784-15	. . . Bushing	2		X	X
27	NAS1149C0632R	. . . Washer – Used with 4119849-903	4		X	X
28	C0480-035-0750M	. . . Spring – Used with 4119849-903	2		X	X

UNCONTROLLED COPY WHEN DOWNLOADED OR PRINTED

Visit www.enstromhelicopter.com for instructions to order an original manual and to register for email notification of updates.

FIGURE 3-17. SEAT BASE ASSEMBLY

ITEM NUMBER	PART NUMBER	DESCRIPTION	QTY PER ASSY	EFFECTIVITY		
				TH-28	480	480B
29	4119791-13	. . . Cam Washer - Used with 4119849-903	2		X	X
30	331381-48W	. . . Stud - Used with 4119849-903	2		X	X
31	4119744-1	. . . Handle - Used with 4119849-902	1		X	X
32	MCI-06-01	. . . Clip - Used with 4119849-902	2		X	X
33	NAS1149C0632R	. . . Washer - Used with 4119849-902	4		X	X
34	C0480-035-0750-M	. . . Spring - Used with 4119849-902	2		X	X
35	MS171531	. . . Roll Pin - Used with 4119849-902	2		X	X
36	4119745-11	. . . Stud - Used with 4119849-902	2		X	X

* Effectivity 480B S/N 5187 and subsequent. Retrofittable to 480 S/N 5001 and subsequent and 480B S/N 5042 and subsequent.

UNCONTROLLED COPY WHEN DOWNLOADED OR PRINTED

Visit www.enstromhelicopter.com for instructions to order an original manual and to register for email notification of updates.

INTENTIONALLY LEFT BLANK

UNCONTROLLED COPY WHEN DOWNLOADED OR PRINTED

Visit www.enstromhelicopter.com for instructions to order an original manual and to register for email notification of updates.

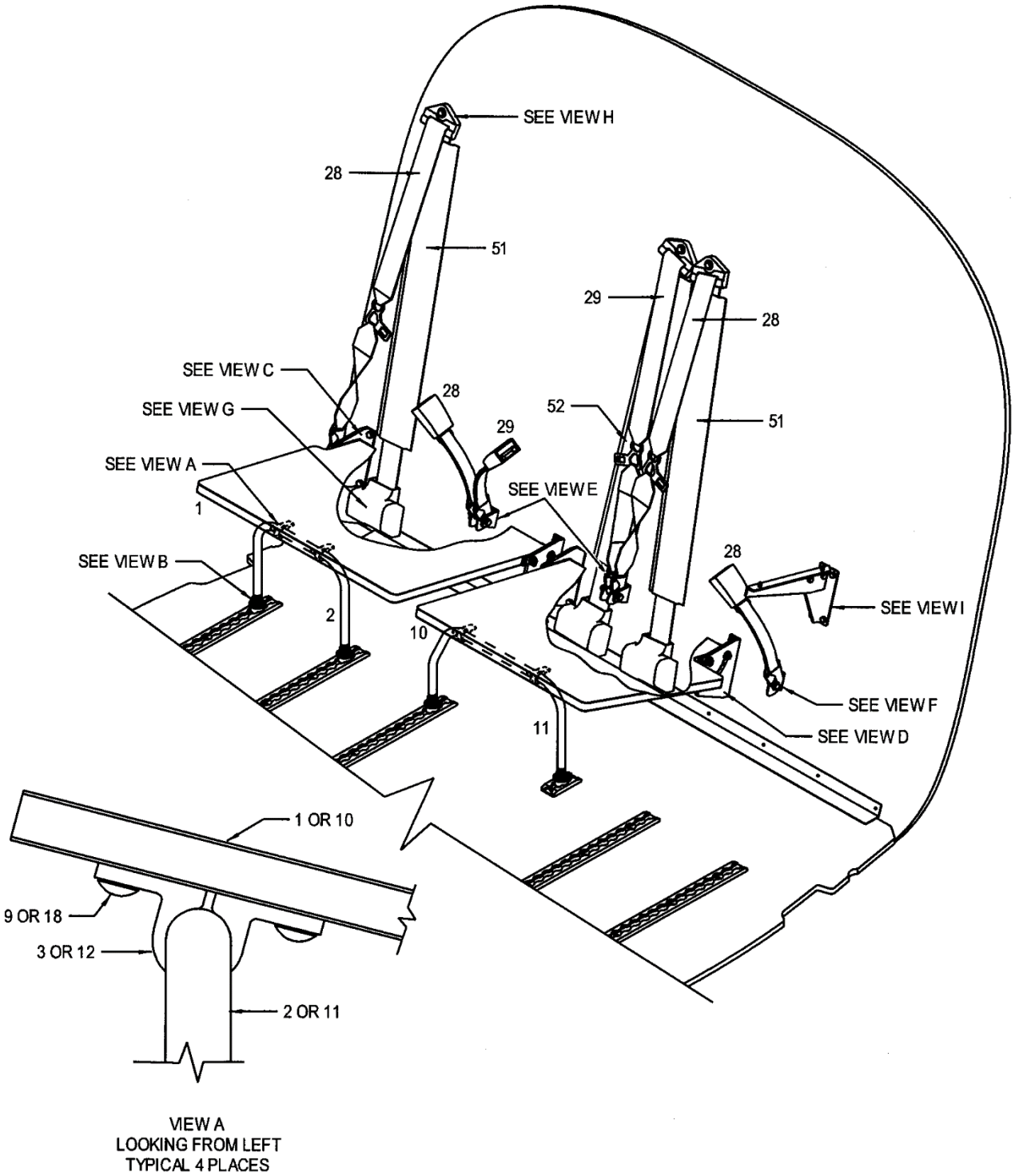

Sheet 1 of 4

FIGURE 3-18. BENCH SEAT INSTALLATION

UNCONTROLLED COPY WHEN DOWNLOADED OR PRINTED

Visit www.enstromhelicopter.com for instructions to order an original manual and to register for email notification of updates.

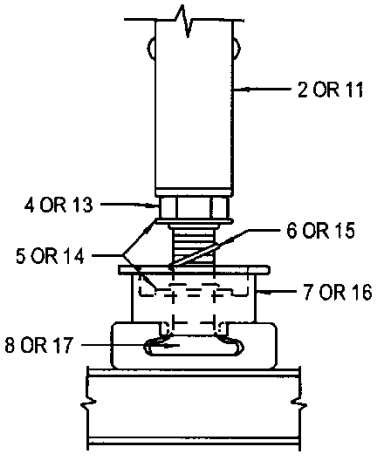

VIEW B
LOOKING AFT
TYPICAL 4 PLACES

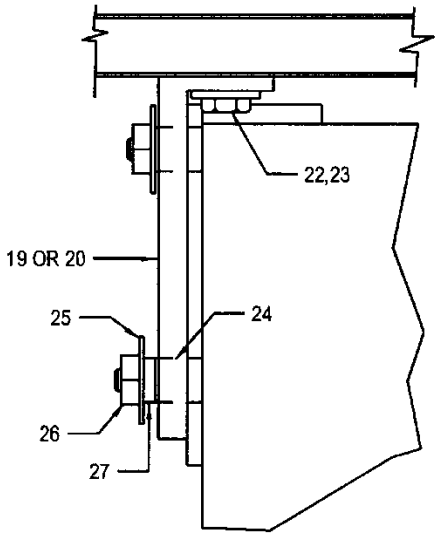

VIEW C
LOOKING DOWN

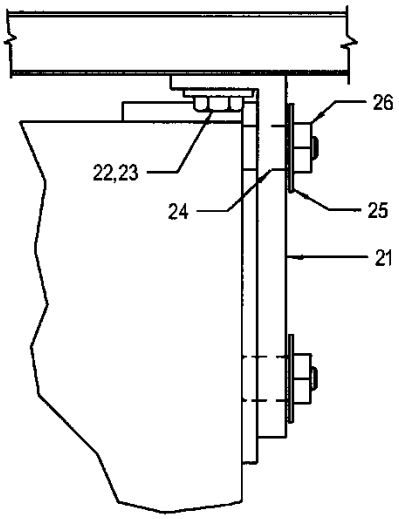

VIEW D
LOOKING DOWN
TYPICAL 3 PLACES

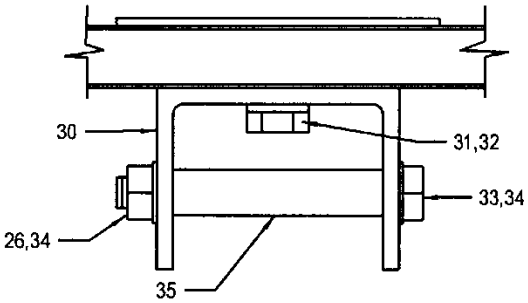

VIEW E
LOOKING DOWN
TYPICAL 2 PLACES

Sheet 2 of 4

FIGURE 3-18. BENCH SEAT INSTALLATION

UNCONTROLLED COPY WHEN DOWNLOADED OR PRINTED

Visit www.enstromhelicopter.com for instructions to order an original manual and to register for email notification of updates.

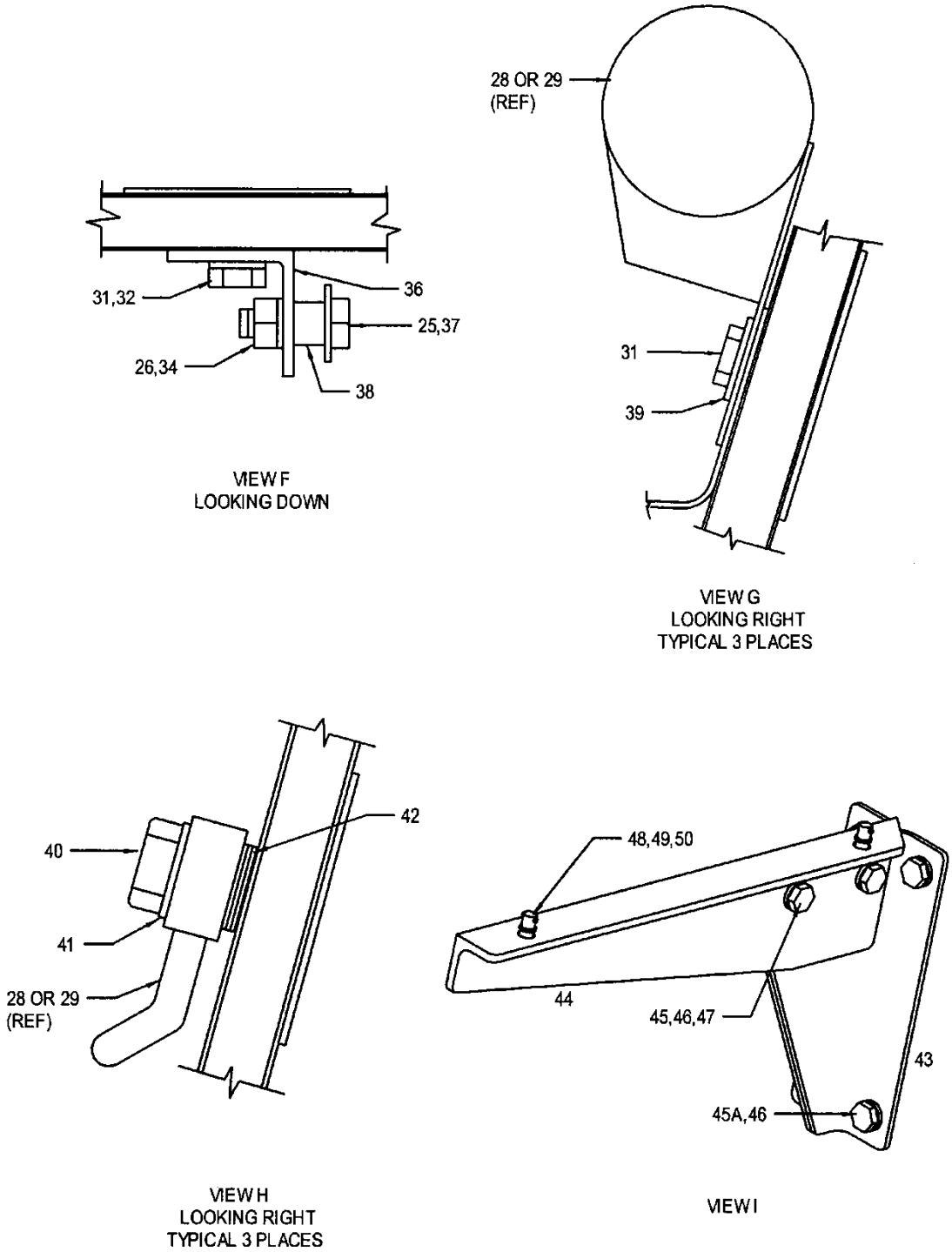

Sheet 3 of 4

FIGURE 3-18. BENCH SEAT INSTALLATION

UNCONTROLLED COPY WHEN DOWNLOADED OR PRINTED

Visit www.enstromhelicopter.com for instructions to order an original manual and to register for email notification of updates.

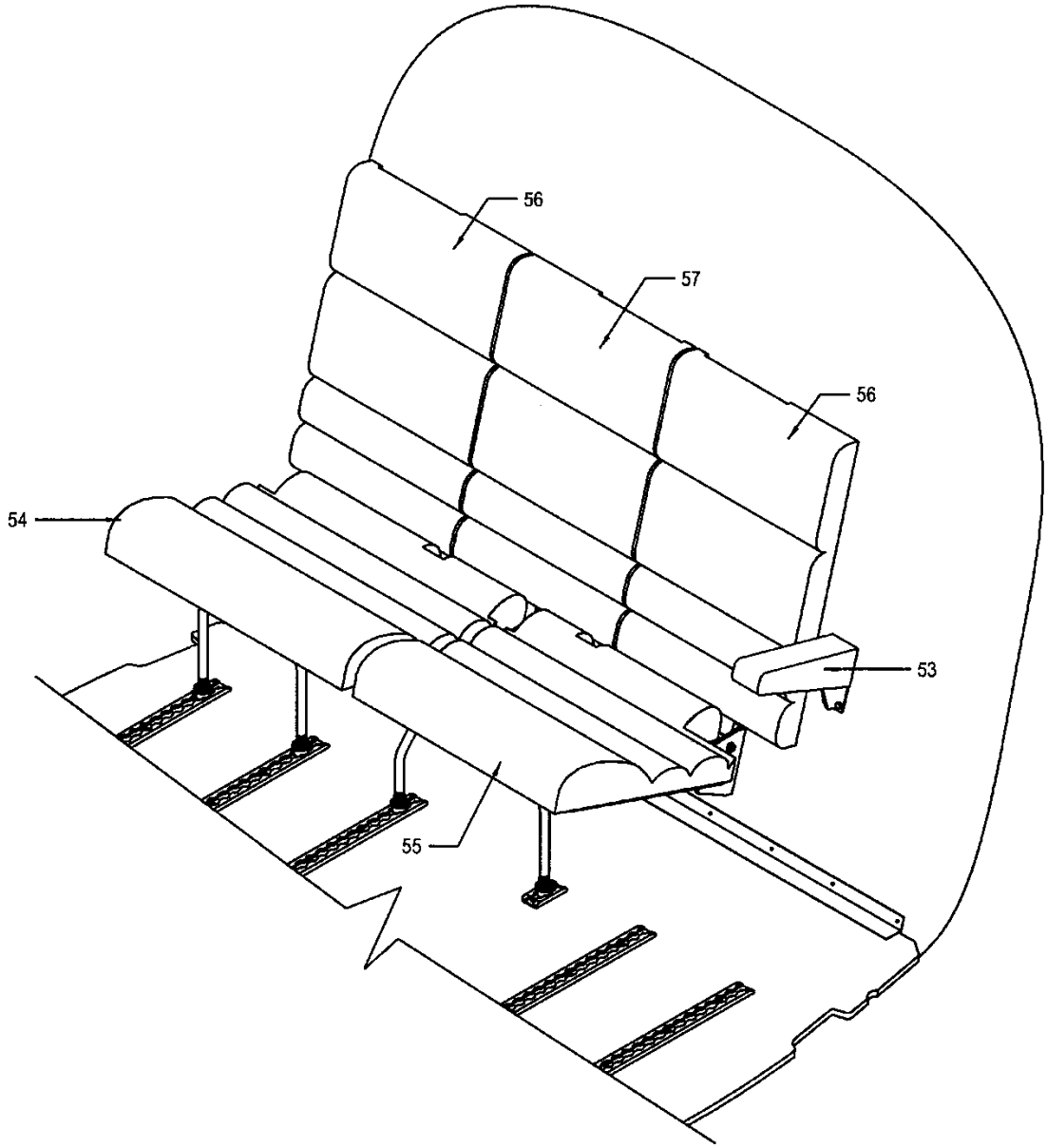

Sheet 4 of 4

FIGURE 3-18. BENCH SEAT INSTALLATION

UNCONTROLLED COPY WHEN DOWNLOADED OR PRINTED

Visit www.enstromhelicopter.com for instructions to order an original manual and to register for email notification of updates.

FIGURE 3-18. BENCH SEAT INSTALLATION

ITEM NUMBER	PART NUMBER	DESCRIPTION	QTY PER ASSY	EFFECTIVITY		
				TH-28	480	480B
1	4119775-9	. Bench Seat Assembly	1		X	X
–	4119884-19	. . Bench Seat (Includes upholstery)	1		X	X
–	4119786-3	. . . Bench Seat	1		X	X
2	4119782-901	. . Bench Seat Leg Assembly	1		X	X
–	4119782-1	. . . Seat Leg Assembly	1		X	X
3	8871T34	. . . Pipe Strap	2		X	X
4	AN316-6R	. . . Nut	2		X	X
5	NAS1149F0663P	. . . Washer	4		X	X
6	C0480-045-0880-S	. . . Spring	2		X	X
7	4119791-15	. . . Cam Washer	2		X	X
8	331281-34W	. . . Stud	2		X	X
9	AN526-832R8	. . Screw	4		X	X
10	4119775-101	. Bench Seat Assembly	1		X	X
–	41197884-17	. . Bench Seat (Includes upholstery)	1		X	X
–	4119786-1	. . . Bench Seat	1		X	X
11	4119782-903	. . Bench Seat Leg Assembly	1		X	X
–	4119782-3	. . . Seat Leg Assembly	1		X	X
12	8871T34	. . . Pipe Strap	2		X	X
13	AN316-6R	. . . Nut	2		X	X
14	NAS1149F0663P	. . . Washer	4		X	X
15	C0480-045-0880-S	. . . Spring	2		X	X
16	4119791-15	. . . Cam Washer	2		X	X
17	331281-34W	. . . Stud	2		X	X
18	AN526-832R8	. . Screw	4		X	X
19	4119781-11	. Fitting (Obsolete, Replaced by 4119781-15)	1		X	X
19	4119781-15	. Fitting (Used with 4119775-9)	1		X	X
20	4119781-13	. Fitting (Obsolete, Replaced by 4119781-17)	1		X	X
20	4119781-17	. Fitting (Used with 4119775-101)	1		X	X
21	4119781-12	. Fitting (Obsolete, Replaced by 4119781-16)	2		X	X
21	4119781-16	. Fitting	2		X	X
22	AN3-10A	. Bolt (Used with 4119781-11, -12, -13)	A/R		X	X
22	AN3-4A	. Bolt	8		X	X
–	4119880-11	. Spacer (Used with 4119781-11, -12, -13)	A/R		X	X
23	AN960-10	. Washer	8		X	X

UNCONTROLLED COPY WHEN DOWNLOADED OR PRINTED

Visit www.enstromhelicopter.com for instructions to order an original manual and to register for email notification of updates.

FIGURE 3-18. BENCH SEAT INSTALLATION

ITEM NUMBER	PART NUMBER	DESCRIPTION	QTY PER ASSY	EFFECTIVITY		
				TH-28	480	480B
24*	4119780-11	. Spacer	8		X	X
25	C102780	. Washer, Flat	9		X	X
26	MS21083N4	. Nut	11		X	X
27	4119780-25	. Spacer (Used with 4119775-9)	1		X	X
28	5-01-095701 Rev A	. Seat Restraint (RH)	2		X	X
28	1117067-07	. Seat Restraint (RH, Alternate)	2		X	X
29	5-01-090701 Rev A	. Seat Restraint (LH)	1		X	X
29	1117067-05	. Seat Restraint (LH, Alternate)	1		X	X
30	4119756-21	. Channel	2		X	X
31	AN4-5A	. Bolt	6		X	X
32	NAS1149F0463P	. Washer	2		X	X
33	AN4-17A	. Bolt	2		X	X
34	NAS1149C0432R	. Washer	4		X	X
35	4119780-29	. Spacer	2		X	X
36	4119756-17	. Angle	1		X	X
37	AN4-6A	. Bolt	1		X	X
38	4119780-25	. Spacer	1		X	X
39	4119799-25	. Washer	3		X	X
40	AN4-7A	. Bolt	3		X	X
41	4119799-27	. Bushing	3		X	X
42	NAS1149F0463P	. Washer	9		X	X
43	4119797-1	. Fitting Assembly	1		X	X
44	4119796-11	. Angle (Used with 4119798-1)	1		X	X
44	4119796-13	. Angle (Used with 4119798-3)	1		X	X
45	AN3-5A	. Bolt	2		X	X
45A	AN3-4A	. Bolt	4		X	X
46	NAS1149F0363P	. Washer	8		X	X
47	MS21083N3	. Nut	2		X	X
48	82-19-140-16	. Oval Head	2		X	X
49	82-46-101-39	. Washer	2		X	X
50	82-32-101-20	. Retainer, Ring, Split	2		X	X
51	4119742-1	. Channel	2		X	X
–	ECD4089-23	. . Hook Fastener	A/R		X	X
52	4119742-3	. Channel	1		X	X
–	ECD4089-23	. . Hook Fastener	A/R		X	X
53	4119795-901	. Arm Rest, Bench Seat, Long (Includes upholstery)	1		X	X

UNCONTROLLED COPY WHEN DOWNLOADED OR PRINTED

Visit www.enstromhelicopter.com for instructions to order an original manual and to register for email notification of updates.

FIGURE 3-18. BENCH SEAT INSTALLATION

ITEM NUMBER	PART NUMBER	DESCRIPTION	QTY PER ASSY	EFFECTIVITY		
				TH-28	480	480B
–	4119795-1	. . Arm Rest Shroud Assembly, Long (Used with 4119798-1)	2		X	X
53	4119795-903	. Arm Rest, Bench Seat, Short (Includes upholstery)	1		X	X
–	4119795-3	. . Arm Rest Shroud Assembly, Short (Used with 4119798-3)	2		X	X
–	82-36-302-15	. . . Receptacle	2		X	X
–	NAS1097AD3-5	. . . Rivet	4		X	X
54	4119884-13	. Seat Cushion (Includes upholstery)	1		X	X
–	4119862-11	. . Seat Cushion	1		X	X
–	4119783-19	. . Insert	1		X	X
55	4119884-15	. Seat Cushion (Includes upholstery)	1		X	X
–	4119862-13	. . Seat Cushion	1		X	X
–	4119783-21	. . Insert	1		X	X
56	4119884-11	. Seat Cushion (Includes upholstery)	2		X	X
–♦	4119884-21	. Back Cushion	1			X
–	4119879-11	. Back Cushion	1		X	X
–♦	4119879-13	. Cushion, Bench Seat Back	1			X
–	4119783-23	. Insert	1		X	X
–♦	4119783-31	. Insert	1			X
57	4119884-12	. Seat Cushion (Includes upholstery)	1		X	X
–♦	4119884-21	. Back Cushion	1			X
–	4119879-11	. Back Cushion	1		X	X
–♦	4119879-13	. Cushion, Bench Seat Back	1			X
–	4119783-23	. Insert	1		X	X
–♦	4119783-31	. Insert	1			X

* Effectivity 480 S/N 5029 and prior.

♦ Effectivity 480B S/N 5246 – 5251.

UNCONTROLLED COPY WHEN DOWNLOADED OR PRINTED

Visit www.enstromhelicopter.com for instructions to order an original manual and to register for email notification of updates.

INTENTIONALLY LEFT BLANK

UNCONTROLLED COPY WHEN DOWNLOADED OR PRINTED

Visit www.enstromhelicopter.com for instructions to order an original manual and to register for email notification of updates.

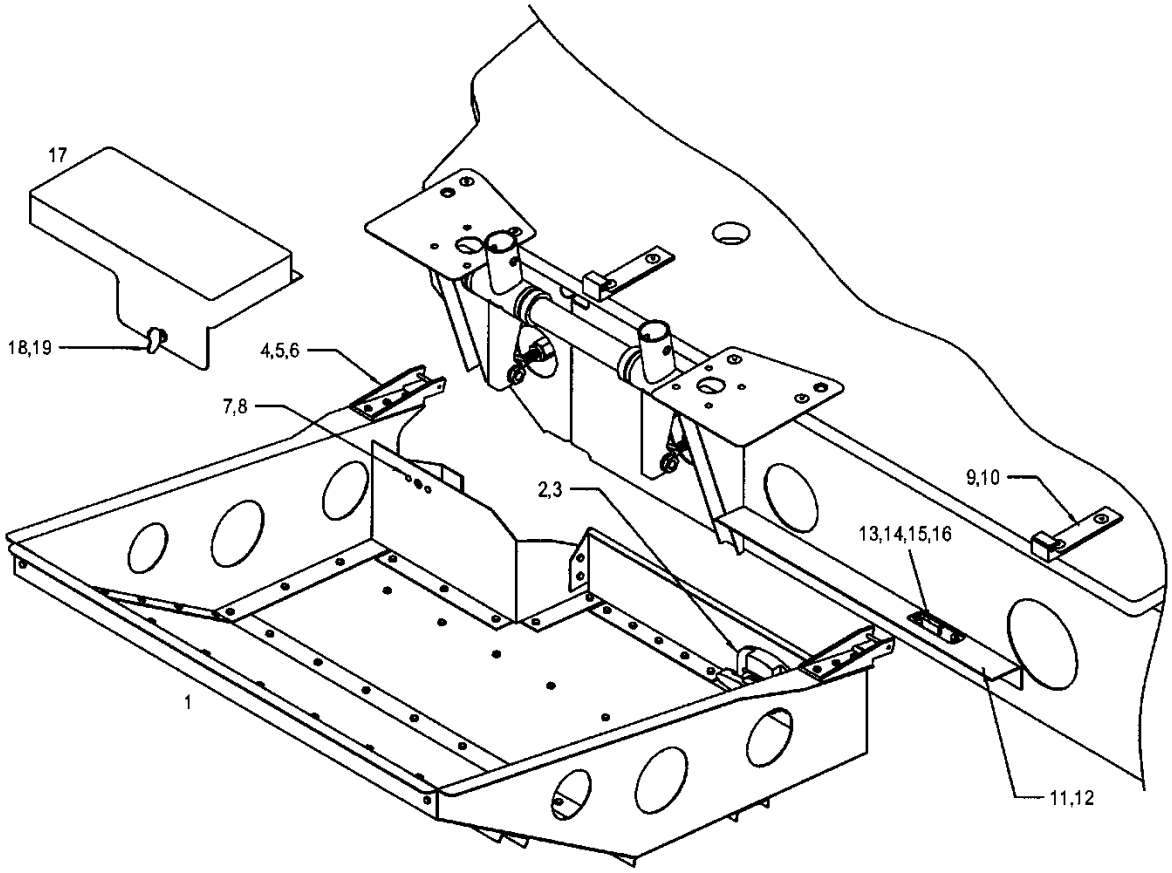

FIGURE 3-19. PASSENGER FOOTREST INSTALLATION

UNCONTROLLED COPY WHEN DOWNLOADED OR PRINTED

Visit www.enstromhelicopter.com for instructions to order an original manual and to register for email notification of updates.

FIGURE 3-19. PASSENGER FOOTREST INSTALLATION

ITEM NUMBER	PART NUMBER	DESCRIPTION	QTY PER ASSY	EFFECTIVITY		
				TH-28	480	480B
1	4119842-5	. Footrest Assembly	1		X	X
–	4220125-19	. . Safety Flooring	1		X	X
–	105CPOLYKEN	. . Tape (Installed behind flooring)	A/R		X	X
2	4230005-11	. . Latch	1		X	X
3	MS20426A5-4	. . Rivet	2		X	X
4	4119845-11	. . Support Latch	2		X	X
5	MS16562-218	. . Spring Pin	2		X	X
6	MS20470AD4-6	. . Rivet	6		X	X
7	82-35-302-15	. Receptacle	1		X	X
8	MS20426AD3-4	. Rivet	2		X	X
9*	4119844-15	. Hook	2		X	X
9**	4119844-17	. Hook	2		X	
10	AN525-10R8	. Screw	4		X	X
11	4119858-13	. Angle	1		X	X
12	MS20470AD4-3	. Rivet	5		X	X
13	4230005-13	. Latch	1		X	X
14	AN507-1032R8	. Screw	2		X	X
15	AN960-10L	. Washer	2		X	X
16	AN365-1032A	. Nut	2		X	X
17	4119855-11	. Pedal Cover	1		X	X
18	82-12-120-16	. Wing Fastener	1		X	X
19	82-32-101-20	. Retainer, Ring, Split	1		X	X

* Serial numbers 5019 and subsequent

** Serial numbers 5001 thru 5018

UNCONTROLLED COPY WHEN DOWNLOADED OR PRINTED

Visit www.enstromhelicopter.com for instructions to order an original manual and to register for email notification of updates.

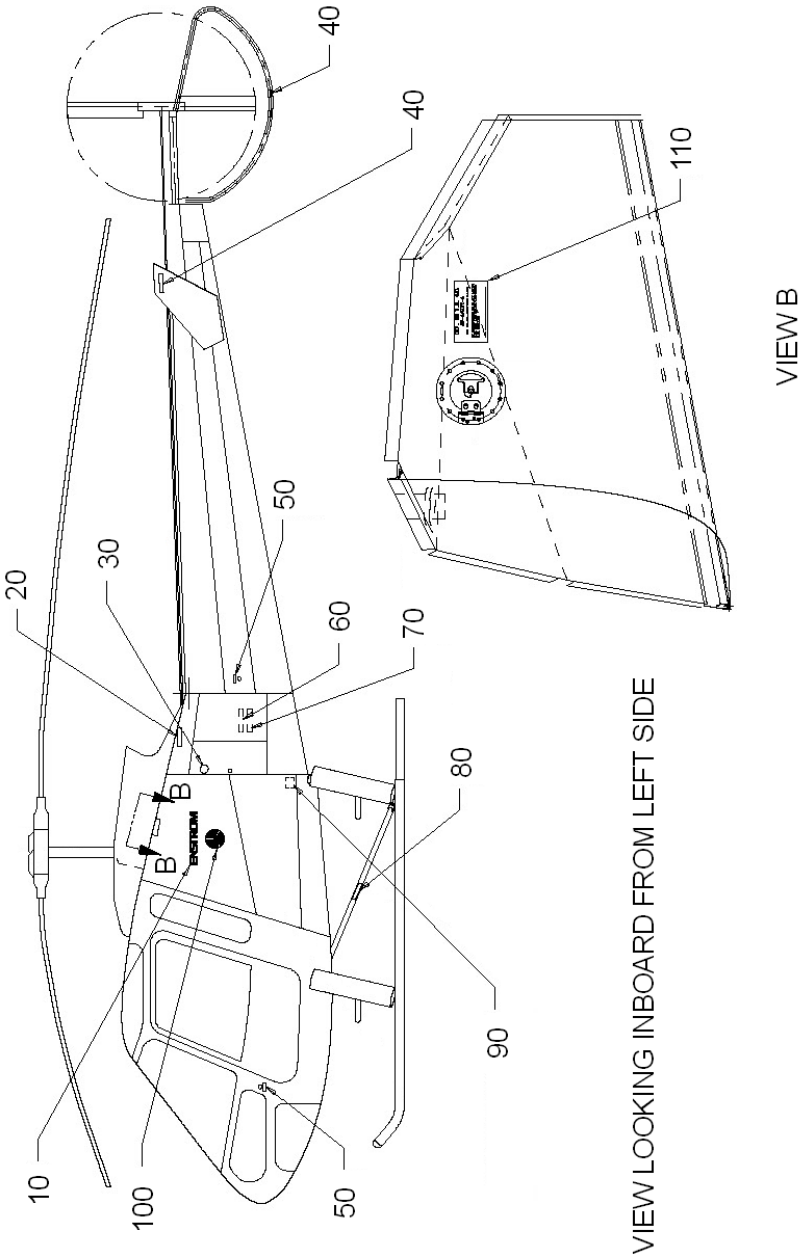

Sheet 1 of 2

FIGURE 3-20. EXTERIOR MARKINGS

UNCONTROLLED COPY WHEN DOWNLOADED OR PRINTED

Visit www.enstromhelicopter.com for instructions to order an original manual and to register for email notification of updates.

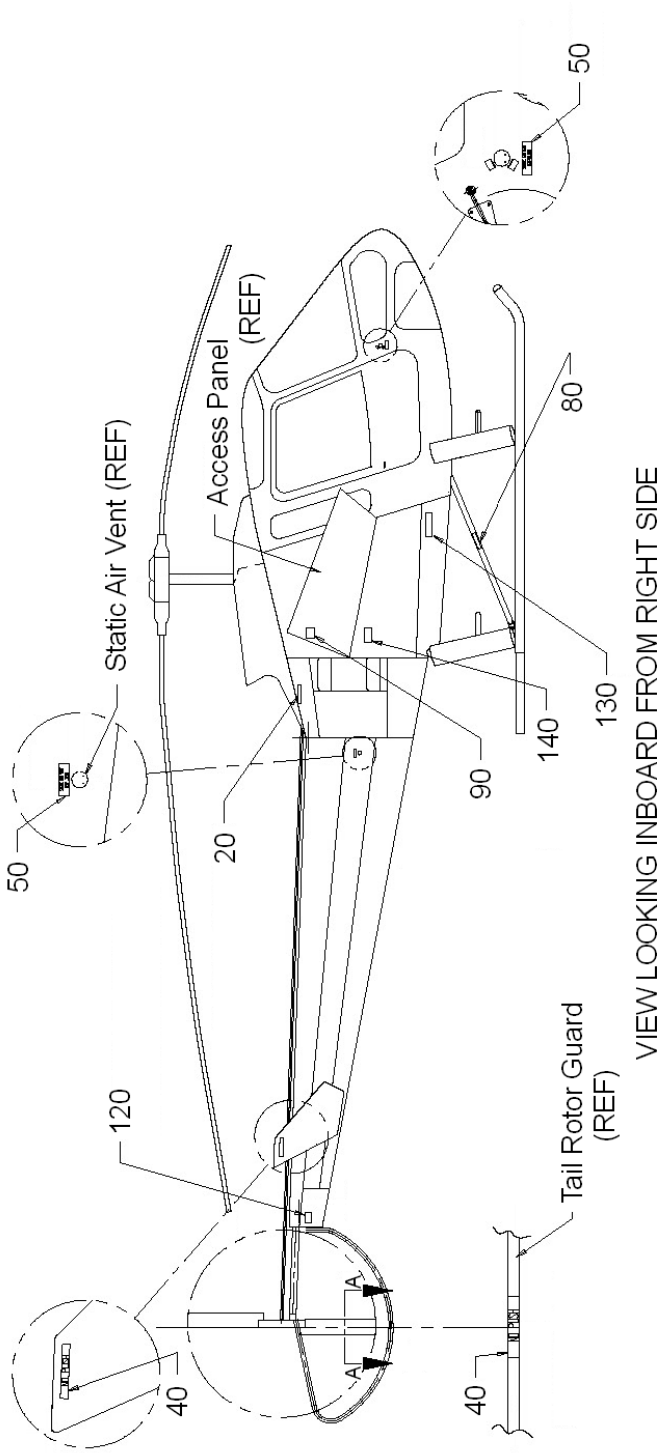

Sheet 2 of 2

FIGURE 3-20. EXTERIOR MARKINGS

UNCONTROLLED COPY WHEN DOWNLOADED OR PRINTED

Visit www.enstromhelicopter.com for instructions to order an original manual and to register for email notification of updates.

FIGURE 3-20. EXTERIOR MARKINGS

ITEM NUMBER	PART NUMBER	DESCRIPTION	QTY PER ASSY	EFFECTIVITY		
				TH-28	480	480B
10	28-00014-1	. Placard: Decal/Stencil “Enstrom”	2		X	X
20	28-17164-13	. Placard: No Step	2		X	X
30*	4119835-31GRD	. Placard: Ground Symbol	2		X	X
40	28-20107-11	. Placard: “No Push”	4		X	X
50	4119913-11	. Placard: Static Air Vent	4		X	X
60**	4119835-31	. Placard: Interior, Max Cargo (Wht/Blk)	1		X	X
70**	4119835-27	. Placard: Interior, Gross Weight (Wht/Red)	1		X	X
80	28-17164-11	. Placard: “No Step” (Red/Wht)	2		X	X
90†	4119914-11	. Placard: Warning, “B” Nut	2		X	X
90	23052363	. Placard: Warning, “B” Nut (Superseded by 4119914-11)	2		X	X
100	28-00015-1	. Placard: Decal/Stencil, 6” Logo	2		X	X
110*	4119835-31C480	. Placard: Cap 90 US Gal JP4 480	1		X	
110*	4119835-31C480B	. Placard: Cap 90 US Gal JP4 480B	1			X
120	28-18009-2	. Placard: Data, A/C Mfg (480)	1		X	
120●	28-18009-13	. Placard: Data, A/C Mfg (480B)	1			X
120	28-18009-3	. Placard: Data, A/C Mfg (480B) (Superseded by 28-18009-13)	1			X
120●	28-18009-17	. Placard: Data, A/C Mfg (Replacement) (Alternate)	1		X	X
120♦	28-18009-21	. Placard-480B Model (Alternate)	1			X
–	CCR274SS-3-02	. . Rivet	4		X	X
130▲	28-19061-11	. Placard: “APU Connector Inside”	1		X	X
140	4119892-11	. Placard: Engine Oil Warning	1		X	X

* These placards are color coordinated with the aircraft. Please provide S/N when ordering.

** These placards are purchased per sheet, and include all of the placards with the same root part number except those noted with an asterisks (*) above.

† Effectivity 480B S/N 5155 and subsequent. Retrofittable to 480 S/N 5001, 480B S/N and 5042 subsequent.

● Effectivity 480B S/N 5183 and subsequent. Retrofittable to 480 S/N 5001 and subsequent and 480B S/N 5042 and subsequent.

▲ May be affixed below APU door, if installed.

♦ Effectivity 480B S/N CE5001 and subsequent. Retrofittable to 480B S/N CE5001 and subsequent.

UNCONTROLLED COPY WHEN DOWNLOADED OR PRINTED

Visit www.enstromhelicopter.com for instructions to order an original manual and to register for email notification of updates.

INTENTIONALLY LEFT BLANK

UNCONTROLLED COPY WHEN DOWNLOADED OR PRINTED

Visit www.enstromhelicopter.com for instructions to order an original manual and to register for email notification of updates.

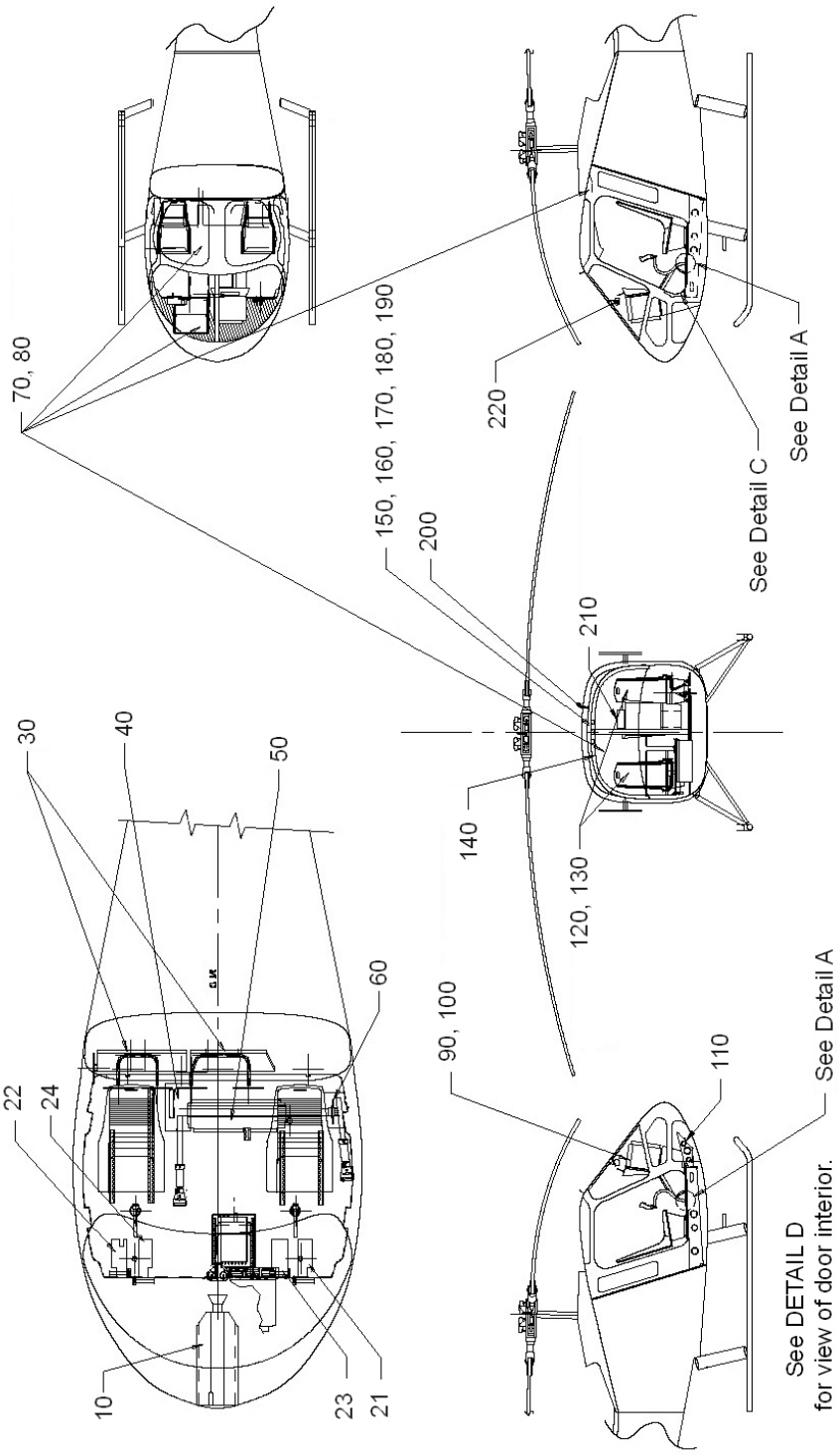

Sheet 1 of 2

FIGURE 3-21. INTERIORS

UNCONTROLLED COPY WHEN DOWNLOADED OR PRINTED

Visit www.enstromhelicopter.com for instructions to order an original manual and to register for email notification of updates.

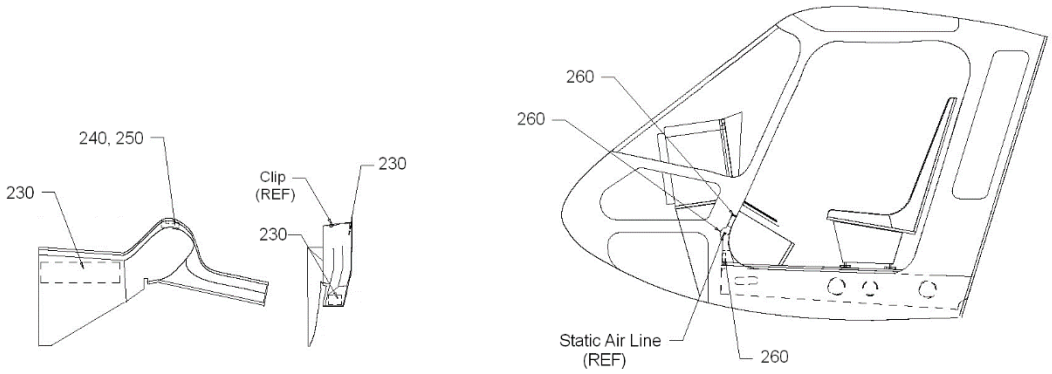

Detail C
Shroud Static Air Line Assembly

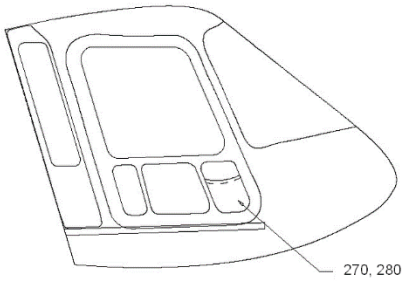

Detail D
View Looking Outboard
Pilot's Door Inside of Cabin

Sheet 2 of 2

FIGURE 3-21. INTERIORS

UNCONTROLLED COPY WHEN DOWNLOADED OR PRINTED

Visit www.enstromhelicopter.com for instructions to order an original manual and to register for email notification of updates.

FIGURE 3-21. INTERIORS

ITEM NUMBER	PART NUMBER	DESCRIPTION	QTY PER ASSY	EFFECTIVITY		
				TH-28	480	480B
–	4119801-1	Interiors 480/480B	REF		X	X
10	4119891-7	. Angle Shroud (Nose) Installation	1		X	X
–	4119861-1	. Scuff Plate Installation	1		X	X
21	4119804-21	. . Plate (Pilot Side, Outboard)	1		X	X
22	4119804-22	. . Plate (Copilot Side, Outboard)	1		X	X
23	4119804-23	. . Plate (Pilot Side, Inboard)	1		X	X
24	4119804-24	. . Plate (Copilot Side, Inboard	1		X	X
–	MS24694-51	. . Screw	16		X	X
30	4119884-1	. Upholstery Assembly (AFT)	1		X	X
35	4119798-1	. Fixed Arm Assembly and Installation, Long	1		X	X
35A	4119798-3	. Fixed Arm Assembly and Installation, Short	1		X	X
40	4119870-3	. Collective Shroud Installation	1		X	X
50	4119871-3	. Torque Tube Shroud Install	1		X	X
60	4119872-3	. Collective Shroud Installation	1		X	X
70	4115005-1	. Upholstery Inserts Installation (Left Hand)	1		X	X
80	4115005-3	. Upholstery Inserts Installation (Right Hand)	1		X	X
–♦	4115005-9	. Upholstery Inserts Installation	1			X
90	4115004-1	. Console Shroud Installation (Alternate)	1		X	X
100	4115004-3	. Console Shroud Installation	1		X	X
110	4119841-5	. Removable Foot Rest Installation	1		X	X
120	4119849-1	. Upholstery Assembly (Left Hand)	1		X	X
130	4119849-3	. Upholstery Assembly (Right Hand)	1		X	X
140	4115013-1	. Backwall Trim	1		X	X
–	4115014-17	. . Closeout Upper Left	1		X	X
–	4115014-18	. . Closeout Upper Right	1		X	X
–	4115014-19	. . Closeout Upper Center	1		X	X
–	4115014-21	. . Closeout Lower Left	1		X	X
–	4115014-22	. . Closeout Lower Right	1		X	X
150	4199067-1	. Dual US Installation (Mono)	1		X	X
160	4199067-3	. 1/4" US Jack Installation	1		X	X
170	4199067-5	. Dual US Stereo Installation	1		X	X
180	4199067-7	. European Comm System Installation	1		X	X
190	4199067-101	. Bose Comm. Station Installation	1		X	X
200†	4119873-1	. OAT Gauge Installation	1		X	X
210	4115020-1	. VNE Placard Installation	1		X	X

UNCONTROLLED COPY WHEN DOWNLOADED OR PRINTED

Visit www.enstromhelicopter.com for instructions to order an original manual and to register for email notification of updates.

FIGURE 3-21. INTERIORS

ITEM NUMBER	PART NUMBER	DESCRIPTION	QTY PER ASSY	EFFECTIVITY		
				TH-28	480	480B
220	4196529-3	. Compass Installation	1		X	X
230	ECD4089-11	. Tape: Velcro	1		X	X
240	4119889-1	. Shroud Static Air Line Assy (Left Hand)	A/R		X	X
250	4119889-2	. Shroud Static Air Line Assy (Right Hand)	A/R		X	X
260	ECD4089-15	. Tape: Velcro	1		X	X
270	4119812-1	. Door Pocket Installation (Left Hand)	1		X	X
280	4119812-2	. Door Pocket Installation (Right Hand)	1		X	X
290	4199049-1	. Cover Installation Junction Box	1		X	X
–	4196557-1	. . Angle Assembly	1		X	X
–	AN526-632R6	. . . Screw	2		X	X
–	3/8-6R	. . . Screw	2		X	X
–	A01784-6Z-1D	. . . Tinnerman (with 3/8-6R screw)	2		X	X
–	MS27039-1-08	. . Screw (to floor)	2		X	X
–	AN960D10L	. . Washer (with MS27039-1-08 screw)	2		X	X

† Not equipped on S/N 5240 and subsequent.

♦ Effectivity 480B S/N 5246 – 5251.

UNCONTROLLED COPY WHEN DOWNLOADED OR PRINTED

Visit www.enstromhelicopter.com for instructions to order an original manual and to register for email notification of updates.

INTENTIONALLY LEFT BLANK

UNCONTROLLED COPY WHEN DOWNLOADED OR PRINTED

Visit www.enstromhelicopter.com for instructions to order an original manual and to register for email notification of updates.

SECTION 4

LANDING GEAR

UNCONTROLLED COPY WHEN DOWNLOADED OR PRINTED

Visit www.enstromhelicopter.com for instructions to order an original manual and to register for email notification of updates.

INTENTIONALLY LEFT BLANK

UNCONTROLLED COPY WHEN DOWNLOADED OR PRINTED

Visit www.enstromhelicopter.com for instructions to order an original manual and to register for email notification of updates.

SECTION 4 – TABLE OF CONTENTS

	Cover	4-1
	Table of Contents	4-1.2
4-1	Landing Gear Cross Tube Installation	4-2
4-2	Landing Gear Assembly and Installation	4-4
4-3	Landing Gear Oleo Installation	4-8
4-4	Oleo Assembly	4-10
4-5	Landing Gear Fairing Installation	4-14
4-6	Landing Gear Steps	4-18

UNCONTROLLED COPY WHEN DOWNLOADED OR PRINTED

Visit www.enstromhelicopter.com for instructions to order an original manual and to register for email notification of updates.

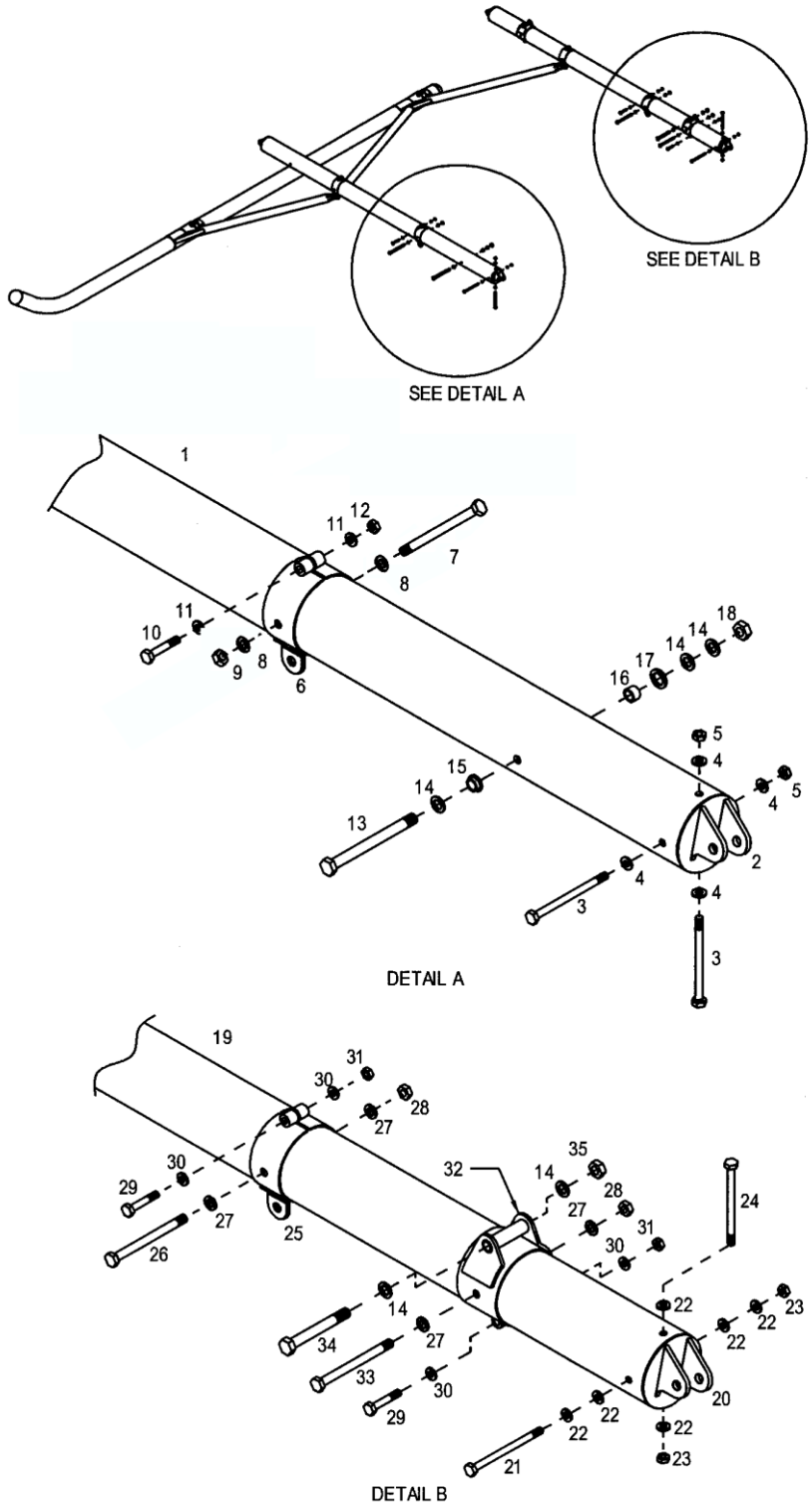

FIGURE 4-1. LANDING GEAR CROSS TUBE INSTALLATION

UNCONTROLLED COPY WHEN DOWNLOADED OR PRINTED

Visit www.enstromhelicopter.com for instructions to order an original manual and to register for email notification of updates.

FIGURE 4-1. LANDING GEAR CROSS TUBE INSTALLATION

ITEM NUMBER	PART NUMBER	DESCRIPTION	QTY PER ASSY	EFFECTIVITY		
				TH-28	480	480B
1	4174002-7	. Cross Tube Assembly, Forward	1	X	X	X
2	4174014-11	. . End Fitting	2	X	X	X
3	AN4-34A	. . Bolt	4	X	X	X
4	AN960-416	. . Washer	8	X	X	X
5	AN364-428A	. . Nut	4	X	X	X
6	4174013-903	. . Pivot Clamp	2	X	X	X
7	AN5-35A	. . Bolt	2	X	X	X
8	AN960-516	. . Washer	4	X	X	X
9	AN365-524A	. . Nut	2	X	X	X
10	AN4-14A	. . Bolt	2	X	X	X
11	AN960-416L	. . Washer	4	X	X	X
12	AN365-428A	. . Nut	2	X	X	X
13	NAS6206-58	. Bolt	2	X	X	X
14	AN960-616	. Washer	10	X	X	X
15	NAS77-6-012	. Bushing	2	X	X	X
16	NAS75-6-010	. Bushing	2	X	X	X
17*	4118892-11	. Shim Bushing	2		X	
18	MS21042-6	. Nut	2	X	X	X
19	4174002-9	. Cross Tube Assembly, Aft	1	X	X	X
20	4174014-11	. . End Fitting	2	X	X	X
21	AN4-37A	. . Bolt	2	X	X	X
22	AN960-416	. . Washer	10	X	X	X
23	AN364-428A	. . Nut	4	X	X	X
24	AN4-34A	. . Bolt	2	X	X	X
25	4174013-903	. . Pivot Clamp	2	X	X	X
26	AN5-37A	. . Bolt	2	X	X	X
27	AN960-516	. . Washer	8	X	X	X
28	AN365-524A	. . Nut	4	X	X	X
29	AN4-14A	. . Bolt	4	X	X	X
30	AN960-416L	. . Washer	8	X	X	X
31	AN365-428A	. . Nut	4	X	X	X
32	28-17101-7	. . Clamp Weldment-Skid Gear	2	X	X	X
32	28-17101-1	. . Gear Clamp (Superseded by 28-17101-7)	2	X	X	X
33	AN5-37A	. . Bolt	2	X	X	X
34	28-17150-1	. Bolt	2	X	X	X
35	AN364-624A	. Nut	2	X	X	X

** Only used with 480, S/N 5007 - 5011.

UNCONTROLLED COPY WHEN DOWNLOADED OR PRINTED

Visit www.enstromhelicopter.com for instructions to order an original manual and to register for email notification of updates.

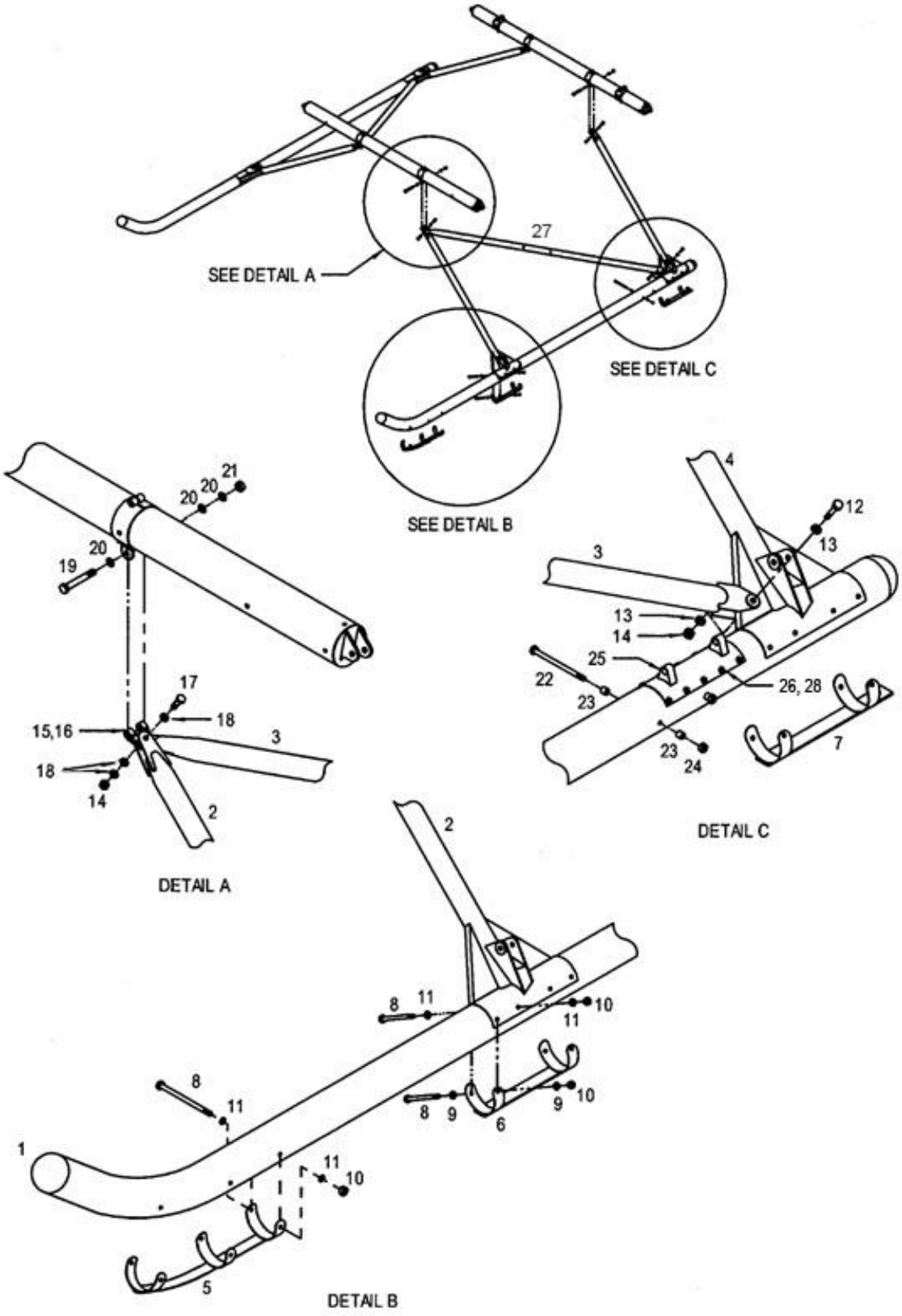

FIGURE 4-2. LANDING GEAR ASSEMBLY AND INSTALLATION

UNCONTROLLED COPY WHEN DOWNLOADED OR PRINTED

Visit www.enstromhelicopter.com for instructions to order an original manual and to register for email notification of updates.

FIGURE 4-2. LANDING GEAR ASSEMBLY AND INSTALLATION

ITEM NUMBER	PART NUMBER	DESCRIPTION	QTY PER ASSY	EFFECTIVITY		
				TH-28	480	480B
1	4174003-1	. Skid, Gear, Assy W/End Caps	2	X	X	
–	4174008-11	. . End Cap	2	X	X	
–	AN530-8R8	. . Screw	2	X	X	
1**	4174003-3	. Skid, Gear, Assy W/End Caps	2	X	X	X
– ●	4174008-17	. . End Cap	2	X	X	X
– ±	4174008-15	. . End Cap (Superseded by 4174008-17)	2	X	X	X
–	4174008-11	. . End Cap (Superseded by 4174008-15)	2	X	X	X
–	AN530-6R6	. . Screw	2	X	X	X
–▸▸	6X3/8	. . Screw	2			X
2	4174001-101	. Leg, Landing Gear, Left Hand, Forward	1	X	X	X
2	4174001-102	. Leg, Landing Gear, Right Hand, Forward	1	X	X	X
3▸	4174001-107	. Drag Strut	2	X	X	X
3	4174001-105	. Drag Strut (Superseded by 4174001-107)	2	X	X	X
4	4174001-103	. Leg, Landing Gear, Left Hand, Aft	1	X	X	X
4	4174001-104	. Leg, Landing Gear, Right Hand, Aft	1	X	X	X
5	4174009-13	. Wear Plate	2	X	X	X
6	4174007-5	. Wear Plate	2	X	X	X
6†	4220132-1	. Wear Plate, Heavy Duty	2		X	X
7	4174007-8	. Wear Plate, Left Hand	1	X	X	X
7	4174007-7	. Wear Plate, Right Hand	1	X	X	X
7†	4220132-1	. Wear Plate, Heavy Duty	2		X	X
8	AN4-33A	. Bolt	22	X	X	X
9‡	NAS1149F0432P	. Washer	16	X	X	X
9	AN960-416L	. Washer (Superseded by NAS1149F0432P)	28	X	X	X
10‡	MS21044N4	. Nut	22	X	X	X
10	AN365-428A	. Nut (Superseded by MS21044N4)	22	X	X	X
11‡	NAS1149F0463P	. Washer	28	X	X	X
11	AN960-416	. Washer (Superseded by NAS1149F0463P)	16	X	X	X
12	AN5-15A	. Bolt	2	X	X	X
13‡	NAS1149F0563P	. Washer	4	X	X	X
13	AN960-516	. Washer (Superseded by NAS1149F0563P)	4	X	X	X
14‡	MS21044N5	. Nut	8	X	X	X
14	AN365-524A	. Nut (Superseded by MS21044N5)	6	X	X	X
15	4174012-11	. Leg Fitting	4	X	X	X
16	4174012-13	. Clamp-up Bushing	4	X	X	X
17	AN5-13A	. Bolt	4	X	X	X
17	AN5-12A	. Bolt (Superseded by AN5-13A)	4	X	X	X

UNCONTROLLED COPY WHEN DOWNLOADED OR PRINTED

Visit www.enstromhelicopter.com for instructions to order an original manual and to register for email notification of updates.

ITEM NUMBER	PART NUMBER	DESCRIPTION	QTY PER ASSY	EFFECTIVITY		
				TH-28	480	480B
18‡	NAS1149F0563P	. Washer	12	X	X	X
18	AN960-516L	. Washer (Superseded by NAS1149F0563P)	12	X	X	X
19	AN6-23A	. Bolt	4	X	X	X
20‡	NAS1149F0663P	. Washer	12	X	X	X
20	AN960-616L	. Washer (Superseded by NAS1149F0663P)	12	X	X	X
21‡	MS21083N6	. Nut	4	X	X	X
21	AN365-624A	. Nut (Superseded by MS21083N6)	4	X	X	X
22*	AN4-37A	. Bolt	4	X	X	
23*	28-16348-1	. Spacer	8	X	X	
24*	AN364-428A	. Nut	4	X	X	
25	ECD4057-15	. Saddle, Ground Handling Wheel	2	X	X	X
25	ECD4057-13	. Saddle, Ground Handling Wheel (Obsolete)	2	X	X	X
25	ECD4057-11	. Saddle, Ground Handling Wheel (Obsolete)	2	X	X	X
25*	WC400-00	. Saddle, Ground Handling Wheel (Superseded by ECD4057-15)	2	X	X	
–	4174004-1	. Nut Plate Strip Assembly (Used with P/N ECD4057)	2	X	X	X
– Δ	4174004-3	. Nut Plate Strip Assembly	2	X	X	X
26	AN3-5A	. Bolt	20		X	X
26ΔΔ	CR3213-6-3	. Rivet (Inactive)	20	X	X	X
27	28-17164-11	. Placard: No Step	2	X	X	X
28	NAS1149F0332P	. Washer	20		X	X
28	AN960-10L	. Washer (Superseded by NAS1149F0332P)	20		X	X

*	Used on early production TH-28/480 aircraft.
**	Effectivity 480B S/N 5042 and subsequent.
†	Effectivity 480/480B S/N 5146 and subsequent.
±	Effectivity 480B S/N 5148 and subsequent.
●	Effectivity 480B S/N 5155 and subsequent. Eligibility 480 S/N 5001, 480B S/N 5042 and subsequent.
‡	Effectivity 480B S/N 5196 and subsequent. Eligibility 480 S/N 5001, 480B S/N 5042 and subsequent.
Δ	Used to support a field replacement for saddle configuration with 1.30” spaced bolt holes.
ΔΔ	Used with WC400-00, ECD4057-11, and ECD4057-13 only. Not supported.
▶	Effectivity 480B S/N 5252 and subsequent; Eligibility 480 S/N 5001, 480B S/N 5042 and subsequent.
▌ ▶▶	Effectivity 480B S/N 5255 and subsequent: Eligibility 480B S/N 5042 and subsequent.

UNCONTROLLED COPY WHEN DOWNLOADED OR PRINTED

Visit www.enstromhelicopter.com for instructions to order an original manual and to register for email notification of updates.

INTENTIONALLY LEFT BLANK

UNCONTROLLED COPY WHEN DOWNLOADED OR PRINTED

Visit www.enstromhelicopter.com for instructions to order an original manual and to register for email notification of updates.

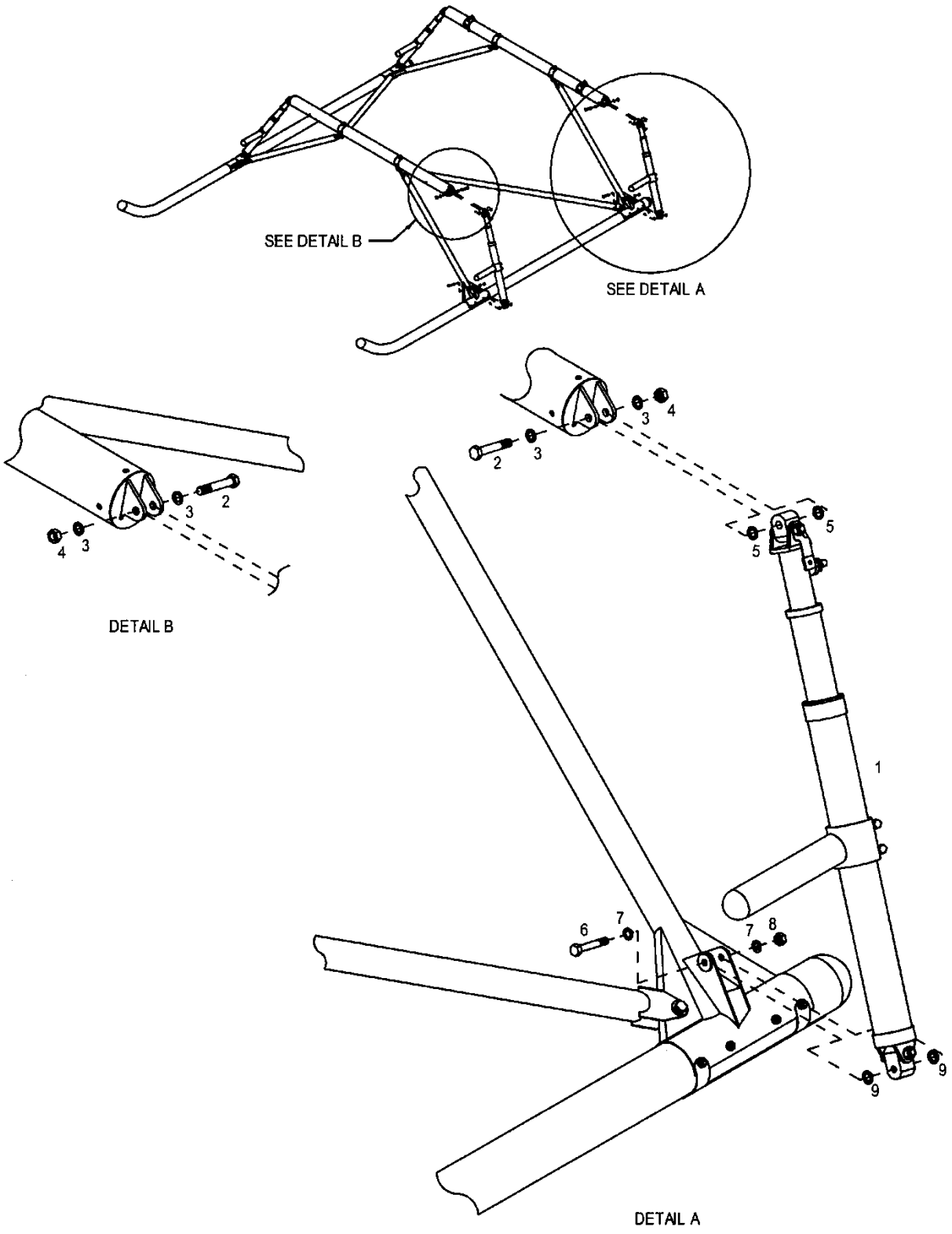

FIGURE 4-3. LANDING GEAR OLEO INSTALLATION

UNCONTROLLED COPY WHEN DOWNLOADED OR PRINTED

Visit www.enstromhelicopter.com for instructions to order an original manual and to register for email notification of updates.

FIGURE 4-3. LANDING GEAR OLEO INSTALLATION

ITEM NUMBER	PART NUMBER	DESCRIPTION	QTY PER ASSY	EFFECTIVITY		
				TH-28	480	480B
1	4174501-4	. Oleo Assembly, R/H	2	X	X	X
1	4174501-5	. Oleo Assembly, L/H	2	X	X	X
2	AN6-20A	. Bolt	4	X	X	X
3*	NAS1149F0663P	. Washer	8	X	X	X
3	AN960-616	. Washer (Superseded by NAS1149F0663P)	8	X	X	X
4*	MS21044N6	. Nut	4	X	X	X
4	AN365-624A	. Nut (Superseded by MS21044N6)	4	X	X	X
5*	NAS1149F0632P	. Washer	8	X	X	X
5	AN960-616L	. Washer (Superseded by NAS1149F0632P)	8	X	X	X
6	AN5-16A	. Bolt	4	X	X	X
7*	NAS1149F0532P	. Washer	8	X	X	X
7	AN960-516	. Washer (Superseded by NAS1149F0532P)	8	X	X	X
8*	MS21044N5	. Nut	4	X	X	X
8	AN365-524A	. Nut (Superseded by MS21044N5)	4	X	X	X
9*	NAS1149F0532P	. Washer	8	X	X	X
9	AN950-516L	. Washer (Superseded by NAS1149F0532P)	8	X	X	X

* Effectivity 480B S/N 5196 and Subsequent. Retrofittable to 480 S/N 5001, 480B S/N 5042 and subsequent.

UNCONTROLLED COPY WHEN DOWNLOADED OR PRINTED

Visit www.enstromhelicopter.com for instructions to order an original manual and to register for email notification of updates.

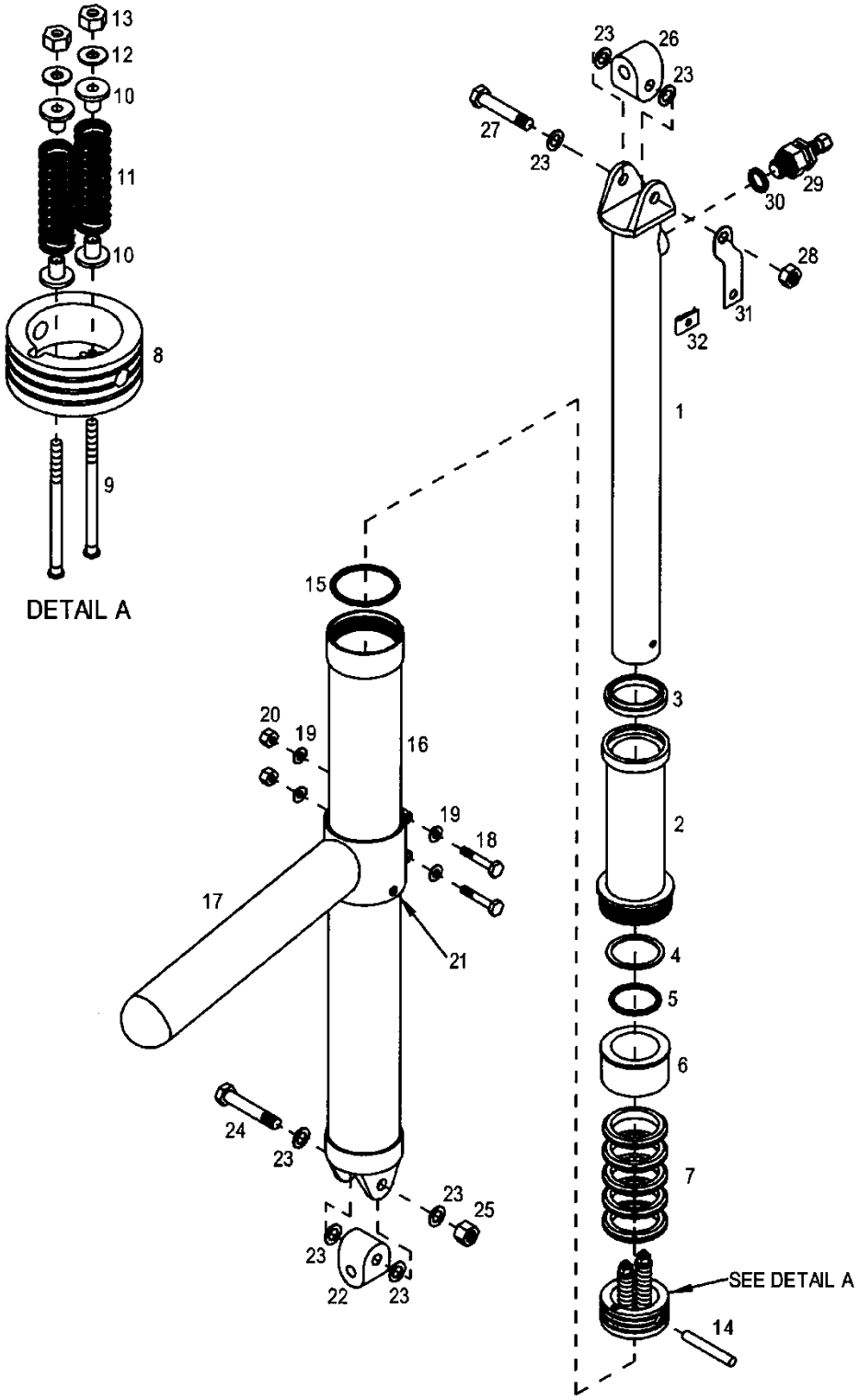

FIGURE 4-4. OLEO ASSEMBLY

UNCONTROLLED COPY WHEN DOWNLOADED OR PRINTED

Visit www.enstromhelicopter.com for instructions to order an original manual and to register for email notification of updates.

FIGURE 4-4. OLEO ASSEMBLY

ITEM NUMBER	PART NUMBER	DESCRIPTION	QTY PER ASSY	EFFECTIVITY		
				TH-28	480	480B
–	4174501-904	. Oleo and Step Assembly, R/H	1	X	X	X
–	4174501-905	. Oleo and Step Assembly, L/H	1	X	X	X
–‡	4174501-4	. . Oleo Assembly, R/H (Includes step)	1	X	X	X
–‡	4174501-5	. . Oleo Assembly, L/H (Includes step)	1	X	X	X
–	28-17147-7	. . . Piston Shaft and Guide Assembly	1	X	X	X
1	28-17146-907	. . . . Piston Shaft	1	X	X	X
2*	28-17144-5	. . . . Seal Housing Assembly	1	X	X	X
2	28-17144-1	. . . . Seal Housing Assembly (Superseded by 28-17144-5)	1	X	X	X
3	D1250	. . . . . Wiper	1	X	X	X
4	8-218-N300-9	. . . . Back-Up Ring	1	X	X	X
5	2-218	. . . . O-Ring (N304-75 Material)	1	X	X	X
5	MS28775-218	. . . . O-Ring (Alternate)	1	X	X	X
6	28-17149-1	. . . . Spacer	1	X	X	X
7	28-17151-1	. . . . Rebound Ring	5	X	X	X
8	28-17145-1	. . . . Piston	1	X	X	X
9	28-17157-1	. . . . Valve Shaft	2	X	X	X
10†	28-17156-3	. . . . Piston Valve	4	X	X	X
10	28-17156-1	. . . . Piston Valve (Superseded by 28-17156-3)	4	X	X	X
11	28-17155-1	. . . . Spring	2	X	X	X
12	AN960-6	. . . . Washer	2	X	X	X
13	AN365-632A	. . . . Nut	2	X	X	X
14	28-17147-3	. . . . Pin	1	X	X	X
15**	MS28775-131	. . . O-Ring	1	X	X	X
15	2-131	. . . O-Ring (Superseded by MS28775-131)	1	X	X	X
16	4174501-901	. . . Cylinder Assembly	1	X	X	X
17**	4174016-101	. . . Step Assembly	1	X	X	X
17	4174016-7	. . . Step Assembly (Superseded by 4174016-101)	1	X	X	X
18	AN3-11A	. . . Bolt	2	X	X	X
19	AN960-10L	. . . Washer	4	X	X	X
20	AN365-1032A	. . . Nut	2	X	X	X
21**	CR3212-4-03	. . . Rivet	2	X	X	X
21	CR3213-4-03	. . . Rivet (Superseded by CR3212-4-03)	2	X	X	X

UNCONTROLLED COPY WHEN DOWNLOADED OR PRINTED

Visit www.enstromhelicopter.com for instructions to order an original manual and to register for email notification of updates.

FIGURE 4-4. OLEO ASSEMBLY

ITEM NUMBER	PART NUMBER	DESCRIPTION	QTY PER ASSY	EFFECTIVITY		
				TH-28	480	480B
22**	28-17123-11	. . . Universal Link	1	X	X	X
22	28-17123-1	. . . Universal Link (Superseded by 28-17123-11)	1	X	X	X
23	AN960-516L	. . . Washer	7	X	X	X
24	AN5-16A	. . . Bolt	1	X	X	X
25	AN365-524A	. . . Nut	1	X	X	X
26	4174015-11	. . . Universal Link	1	X	X	X
27	4174027-11	. . . Cap Screw	1	X	X	X
28	AN364-524A	. . . Nut	1	X	X	X
29	MS28889-2	. . . Valve Assembly	1	X	X	X
–	MS20813-1	. . . . Cap	1	X	X	X
30	2-015	. . . . O-Ring (N304-75 Material)	1	X	X	X
30	MS28775-015	. . . . O-Ring (Alternate)	1	X	X	X
31	4174020-15	. . Clip	1	X	X	X
32 ≡	A01789-8Z-1D	. . Nut, Tinnerman	1	X	X	X

* Effectivity from S/N 5056 and subsequent.

** Effectivity for 480B S/N 5143 and subsequent.

≡ See Appendix A for equivalent part information.

† Effectivity for TH-28 S/N 3003 and subsequent; 480/480B S/N 5001 and subsequent.

‡ Customers may also purchase 4174501-910 Turbine Oleo Maintenance Kit.

UNCONTROLLED COPY WHEN DOWNLOADED OR PRINTED

Visit www.enstromhelicopter.com for instructions to order an original manual and to register for email notification of updates.

INTENTIONALLY LEFT BLANK

UNCONTROLLED COPY WHEN DOWNLOADED OR PRINTED

Visit www.enstromhelicopter.com for instructions to order an original manual and to register for email notification of updates.

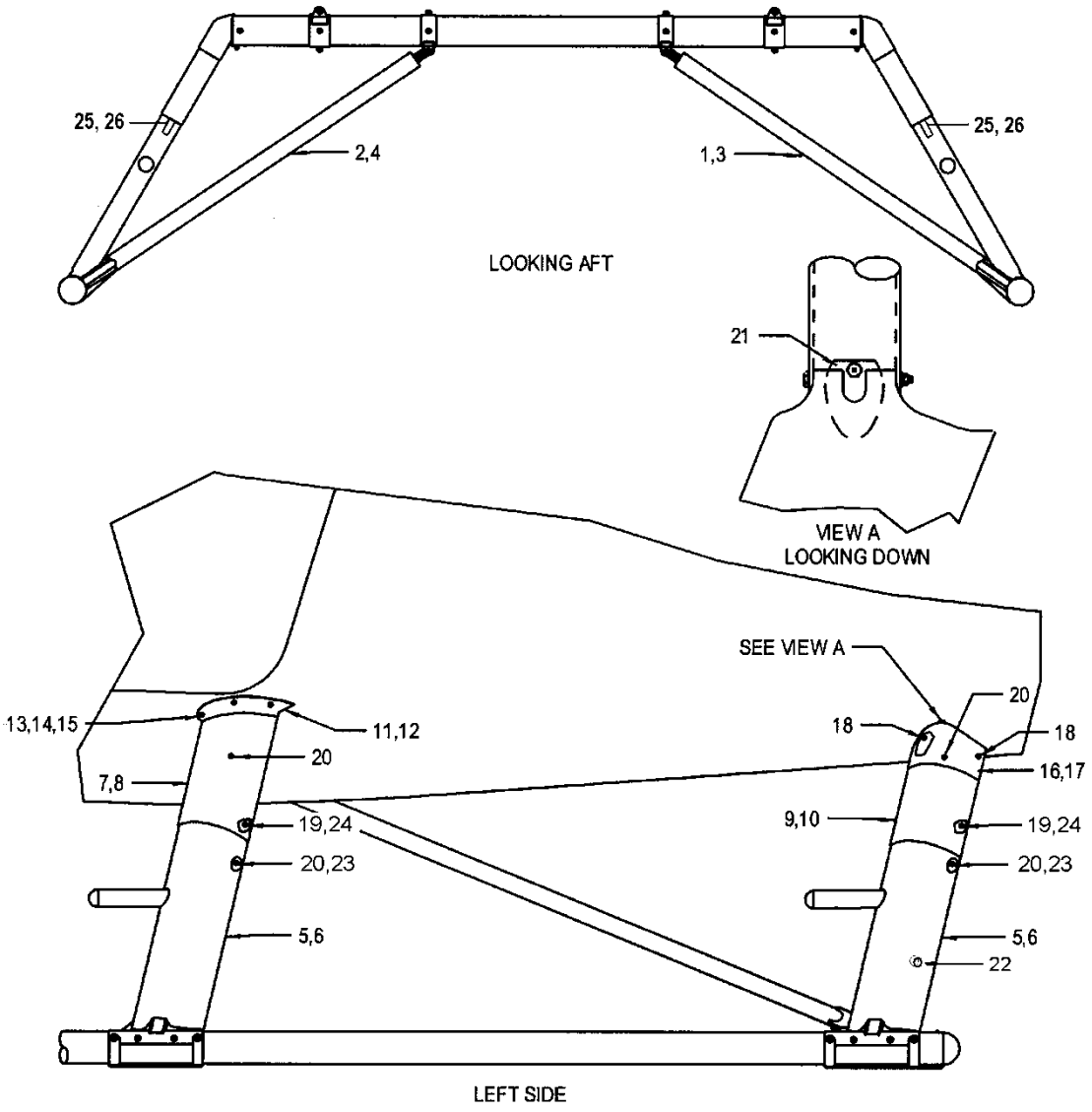

FIGURE 4-5. LANDING GEAR FAIRING INSTALLATION

UNCONTROLLED COPY WHEN DOWNLOADED OR PRINTED

Visit www.enstromhelicopter.com for instructions to order an original manual and to register for email notification of updates.

FIGURE 4-5. LANDING GEAR FAIRING INSTALLATION

ITEM NUMBER	PART NUMBER	DESCRIPTION	QTY PER ASSY	EFFECTIVITY		
				TH-28	480	480B
1	4174019-7	. Fairing, Gear Leg, Left Forward	1	X	X	X
–**	NAS1922-0150-3	. . Clamp	1	X	X	X
–	20020S	. . Clamp (Superseded by NAS1922-0150-3)	1	X	X	X
–	4174020-13	. . Clip	2	X	X	X
2	4174019-8	. Fairing, Gear Leg, Right Forward	1	X	X	X
–**	NAS1922-0150-3	. . Clamp	1	X	X	X
–	20020S	. . Clamp (Superseded by NAS1922-0150-3)	1	X	X	X
–	4174020-13	. . Clip	2	X	X	X
3	4174019-9	. Fairing, Gear Leg, Left Aft	1	X	X	X
–**	NAS1922-0150-3	. . Clamp	1	X	X	X
–	20020S	. . Clamp (Superseded by NAS1922-0150-3)	1	X	X	X
–	4174020-13	. . Clip	2	X	X	X
4	4174019-102	. Fairing, Gear Leg, Right Aft	1	X	X	X
–**	NAS1922-0150-3	. . Clamp	1	X	X	X
–	20020S	. . Clamp (Superseded by NAS1922-0150-3)	1	X	X	X
–	4174020-13	. . Clip	2	X	X	X
5	4174019-1	. Fairing, Oleo, Left Side	2	X	X	X
–**	NAS1922-0150-3	. . Clamp	1	X	X	X
–	20020S	. . Clamp (Superseded by NAS1922-0150-3)	1	X	X	X
–	NAS1024N08K	. . Nut Plate	1	X	X	X
–≡	A06195-8Z-1D	. . Nut, Tinnerman	5	X	X	X
–	CCR-264-SS-3-2	. . Rivet	12	X	X	X
–	4174020-11	. . Clip	2	X	X	X
6	4174019-2	. Fairing, Oleo, Right Side	2	X	X	X
–**	NAS1922-0150-3	. . Clamp	1	X	X	X
–	20020S	. . Clamp (Superseded by NAS1922-0150-3)	1	X	X	X
–	NAS1024N08K	. . Nut Plate	1	X	X	X
– ≡	A06195-8Z-1D	. . Nut, Tinnerman	5	X	X	X
–	CCR-264-SS-3-2	. . Rivet	12	X	X	X
–	4174020-11	. . Clip	2	X	X	X
7	4174019-3	. Fairing, Oleo, Upper Left Side Forward	1	X	X	X
8	4174019-4	. Fairing, Oleo, Upper Right Side Forward	1	X	X	X
9	4174019-101	. Fairing, Oleo, Upper Left Side Aft	1	X	X	X
– ≡	A01789-8Z-1D	. . Nut, Tinnerman	2	X	X	X
10	4174019-104	. Fairing, Oleo, Upper Right Side Aft	1	X	X	X

UNCONTROLLED COPY WHEN DOWNLOADED OR PRINTED

Visit www.enstromhelicopter.com for instructions to order an original manual and to register for email notification of updates.

FIGURE 4-5. LANDING GEAR FAIRING INSTALLATION

ITEM NUMBER	PART NUMBER	DESCRIPTION	QTY PER ASSY	EFFECTIVITY		
				TH-28	480	480B
– ≡	A01789-8Z-1D	. . Nut, Tinnerman	2	X	X	X
11	4174022-11	. Closeout, Left Side	1	X	X	X
12	4174022-12	. Closeout, Right Side	1	X	X	X
13	AN525-8R7	. Screw	6	X	X	X
14	S8P-150	. PlusNut	6	X	X	X
15	AN936-A416	. Lock Washer	6	X	X	X
16	4174021-11	. Closeout, Left Side	1	X	X	X
17	4174021-12	. Closeout, Right Side	1	X	X	X
18≡	6 X1/2	. Screw, Self Tapping	4	X	X	X
19	AN507-832R7	. Screw	4	X	X	X
20	8X1/2	. Screw, Self Tapping	24	X	X	X
21*	4174024-11	. Support	2	X	X	
22	BPF-3/4	. Plug	1	X	X	X
23	5451	. Tape	A/R	X	X	X
24	Y9485	. Tape	A/R	X	X	X
25	4174034-11	. Indicator Placard	4	X	X	X
26	5480	. Tape	A/R	X	X	X

* Used on TH-28, S/N 3004-3006, and 480, S/N 5001-5024.

≡ See Appendix A for equivalent part information.

** Effectivity 480B S/N 5207 and subsequent. Retrofittable to 480 S/N 5001, 480B S/N 5042 and subsequent.

UNCONTROLLED COPY WHEN DOWNLOADED OR PRINTED

Visit www.enstromhelicopter.com for instructions to order an original manual and to register for email notification of updates.

INTENTIONALLY LEFT BLANK

UNCONTROLLED COPY WHEN DOWNLOADED OR PRINTED

Visit www.enstromhelicopter.com for instructions to order an original manual and to register for email notification of updates.

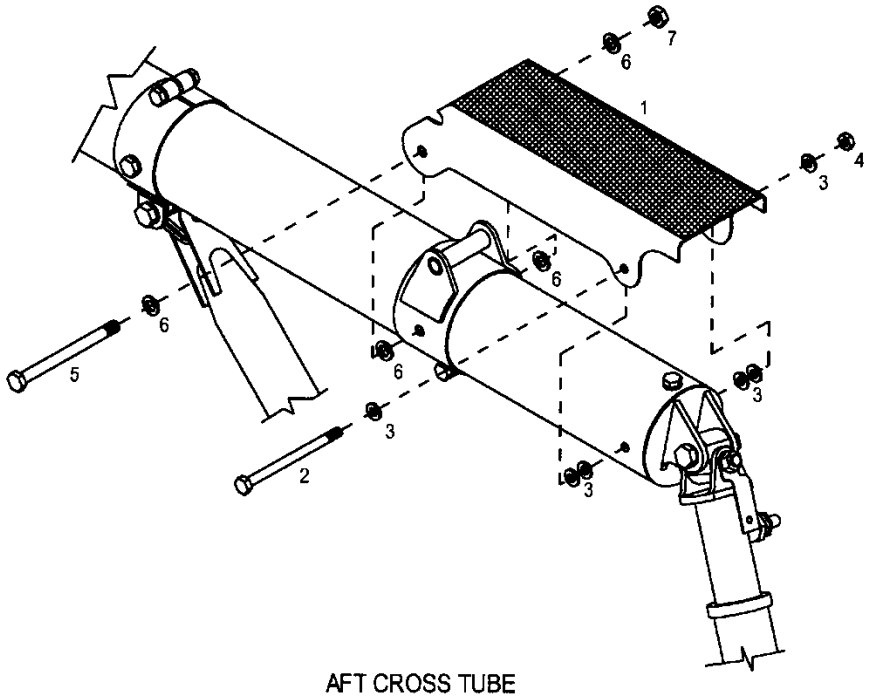

AFT CROSS TUBE

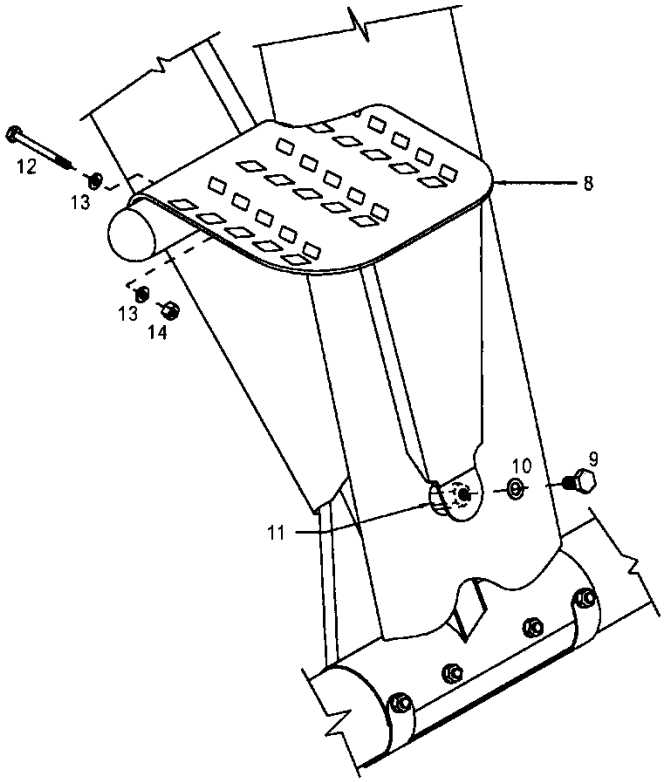

FORWARD STEP

FIGURE 4-6. LANDING GEAR STEPS

UNCONTROLLED COPY WHEN DOWNLOADED OR PRINTED

Visit www.enstromhelicopter.com for instructions to order an original manual and to register for email notification of updates.

FIGURE 4-6. LANDING GEAR STEPS

ITEM NUMBER	PART NUMBER	DESCRIPTION	QTY PER ASSY	EFFECTIVITY		
				TH-28	480	480B
1	4174032-11	. Cover, Left Side	1	X	X	X
1	4174032-12	. Cover, Right Side	1	X	X	X
2	AN4-36A	. Bolt	2	X	X	X
3*	NAS1149F0463P	. Washer	4	X	X	X
3	AN960-416	. Washer (Superseded by NAS1149F0463P)	4	X	X	X
4	AN364-428A	. Nut	2	X	X	X
5	AN5-35A	. Bolt	2	X	X	X
6*	NAS1149F0563P	. Washer	8	X	X	X
6	AN960-516	. Washer (Superseded by NAS1149F0563P)	8	X	X	X
7	AN365-524A	. Nut	2	X	X	X
8	4174033-1	. Step Assembly, Left Side	1	X	X	X
8	4174033-2	. Step Assembly, Right Side	1	X	X	X
9	AN5-4A	. Bolt	2	X	X	X
10	AN960-516L	. Washer	2	X	X	X
11	4174033-17	. Threaded Hex	2	X	X	X
12	AN3-20A	. Bolt	4	X	X	X
13*	NAS1149F0363P	. Washer	8	X	X	X
13	AN960-10	. Washer (Superseded by NAS1149F0363P)	8	X	X	X
14*	MS21044N3	. Nut	4	X	X	X
14	AN365-1032A	. Nut (Superseded by MS21044N3)	4	X	X	X

Note: Steps are standard equipment on 480B, optional equipment on TH-28/480.

* Effectivity 480B S/N 5196 and subsequent. Retrofittable to 480 S/N 5001, 480B S/N 5042 and subsequent.

UNCONTROLLED COPY WHEN DOWNLOADED OR PRINTED

Visit www.enstromhelicopter.com for instructions to order an original manual and to register for email notification of updates.

INTENTIONALLY LEFT BLANK

UNCONTROLLED COPY WHEN DOWNLOADED OR PRINTED

Visit www.enstromhelicopter.com for instructions to order an original manual and to register for email notification of updates.

SECTION 5

FUEL SYSTEM

UNCONTROLLED COPY WHEN DOWNLOADED OR PRINTED

Visit www.enstromhelicopter.com for instructions to order an original manual and to register for email notification of updates.

INTENTIONALLY LEFT BLANK

UNCONTROLLED COPY WHEN DOWNLOADED OR PRINTED

Visit www.enstromhelicopter.com for instructions to order an original manual and to register for email notification of updates.

SECTION 5 – TABLE OF CONTENTS

	Cover	5-1
	Table of Contents	5-1.2
5-1	Fuel Cell Installation – Aerotech/UFCC Fuel Cells	5-2
5-2	Fuel Bladder Structure Assy/Install – Aerotech/UFCC Fuel Cells	5-6
5-3	Fuel Cell Installation - Aerazur Fuel Cells	5-14
5-4	Fuel Cell Installation - Aerazur Fuel Cells S/N 5011 and 5012	5-16
5-5	Fuel Line Installation – Aerotech/UFCC Fuel Cells	5-20
5-6	Fuel Line Installation - Aerazur Fuel Cells	5-26
5-7	Flanged Plate Assembly – Aerotech/UFCC Fuel Cells	5-30
5-8	Fuel Shutoff Valve Assembly	5-32
5-9	Sump Drain Valve Installation	5-40
5-10	Fuel Shutoff Cable Installation S/N 5001 - 5145	5-42
5-11	Fuel Shutoff Cable Installation	5-44
5-12	Optional Airframe Mounted Fuel Filter	5-48

UNCONTROLLED COPY WHEN DOWNLOADED OR PRINTED

Visit www.enstromhelicopter.com for instructions to order an original manual and to register for email notification of updates.

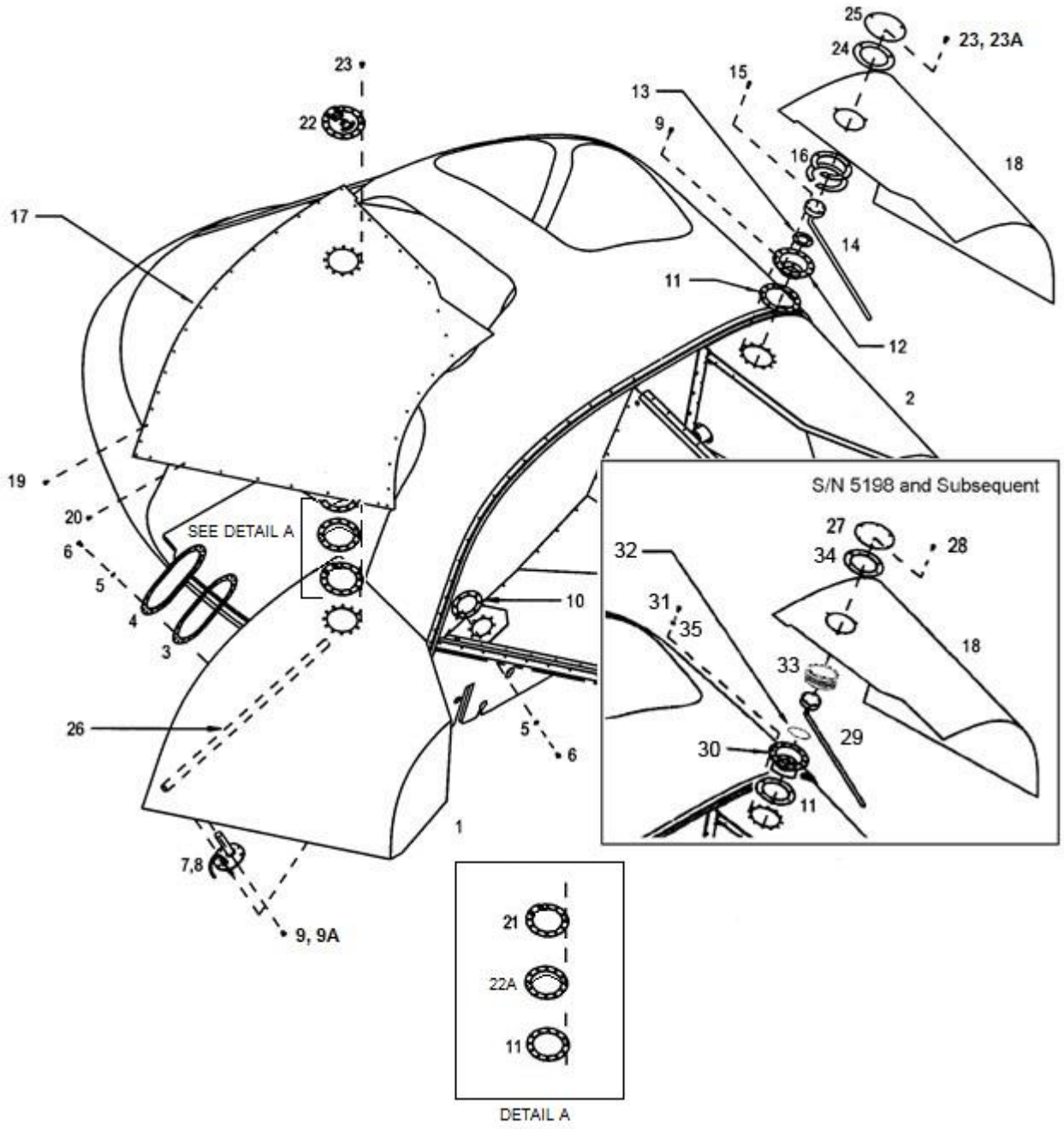

480/480B: S/N 5007, 5010, 5013 and subs.
(earlier S/N modified to Aerotech/UFCC fuel cells, as applicable)
TH-28: 3007 and subs.

FIGURE 5-1. FUEL CELL INSTALLATION – AEROTECH/UFCC FUEL CELLS

UNCONTROLLED COPY WHEN DOWNLOADED OR PRINTED

Visit www.enstromhelicopter.com for instructions to order an original manual and to register for email notification of updates.

FIGURE 5-1. FUEL CELL INSTALLATION – AEROTECH/UFCC FUEL CELLS

ITEM NUMBER	PART NUMBER	DESCRIPTION	QTY PER ASSY	EFFECTIVITY		
				TH-28	480	480B
–	4122054-3	Fuel System Installation	Ref		X	X
1♦	4122052-7	. Fuel Bladder, L/H	1		X	X
–♦	4122052-3	. Fuel Bladder, L/H (Superseded by 4122052-7)	1	X	X	X
–	4122054-903	. Left-Fuel Bladder Sub Assembly	Ref	X	X	X
–♦♦	4122052-101	. . Fuel Bladder, L/H (Without Foam Baffles)	1		X	X
–♦	4122052-5	. . Fuel Bladder, L/H (Without Foam Baffles) (Superseded by 4122052-101)	1		X	X
–♦	4122052-1	. . Fuel Bladder L/H (Without Foam Baffles) (Superseded by 4122052-101)	1	X	X	X
–	4122058-901	. . Foam Assembly: Fuel Bladder L/H	1		X	X
2♦	4122052-8	. Fuel Bladder, R/H	1		X	X
–♦	4122052-4	. Fuel Bladder, R/H (Superseded by 4122052-8)	1	X	X	X
–	4122052-10	. Fuel Bladder, R/H (Inactive)	1		X	X
–	4122054-906	. Right-Fuel Bladder Sub Assembly	Ref	X	X	X
–	4122054-904	. Right-Fuel Bladder Sub Assembly (Superseded by 4122054-906)	Ref	X	X	X
–♦♦	4122052-102	. . Fuel Bladder, R/H (Without Foam Baffles)	1		X	X
–♦	4122052-6	. . Fuel Bladder R/H (Without Foam Baffles) (Superseded by 4122052-102)	1		X	X
–♦	4122052-2	. . Fuel Bladder R/H (Without Foam Baffles) (Superseded by 4122052-102)	1	X	X	X
–	4122058-902	. . Foam Assembly: Fuel Bladder R/H	1	X	X	X
3	ECD4049-11	. Gasket	2	X	X	X
4	4122053-13	. . Flange Plate	2	X	X	X
5	NAS1149D0416H	. . Washer	56	X	X	X
6	AN4H3A	. Bolt	56	X	X	X
–	MS20995C25	. Safety Wire	A/R	X	X	X
7**	4122057-3	. . Flange Plate Assembly, L/H (See Figure 5-7 for breakdown)	1	X	X	X
7	4122057-1	. . Flange Plate Assembly, L/H (See Figure 5-7 for breakdown) (Superseded by 4122057-3)	1	X	X	X
8**	4122057-4	. . Flange Plate Assembly, R/H (See Figure 5-7 for breakdown)	1	X	X	X
8	4122057-2	. . Flange Plate Assembly, R/H (See Figure 5-7 for breakdown) (Superseded by 4122057-4)	1	X	X	X
9	MS24694-S94	. Screw	17	X	X	X

UNCONTROLLED COPY WHEN DOWNLOADED OR PRINTED

Visit www.enstromhelicopter.com for instructions to order an original manual and to register for email notification of updates.

FIGURE 5-1. FUEL CELL INSTALLATION – AEROTECH/UFCC FUEL CELLS

ITEM NUMBER	PART NUMBER	DESCRIPTION	QTY PER ASSY	EFFECTIVITY		
				TH-28	480	480B
9A°	MS24693-S294	. Screw	8			X
10	4122065-27	. Gasket	2	X	X	X
11	ECD4049-13	. Gasket	2	X	X	X
11	ECD4049-13	. Gasket	2	X	X	X
12●	4122048-3	. Flanged Mounting Plate	1	X	X	X
13●	ECD4037-11	. Gasket	1	X	X	X
14*●	4122088-5	. Fuel Capacitance Probe	1			X
14	4122088-3	. Fuel Capacitance Probe	1	X	X	X
14*	4122088-1	. Fuel Capacitance Probe (Superseded by 4122088-5)	1			X
15	AN525-10R18	. Screw	5	X	X	X
16●	4122065-21	. Spacer	2	X	X	X
17	4119333-3	. Fuel Cell Panel, L/H	1	X	X	X
18	4119333-4	. Fuel Cell Panel, R/H	1	X	X	X
19	AN525-10R7	. Screw	68	X	X	X
20	AN525-10R10	. Screw	24	X	X	X
21	4122065-25	. Gasket	1	X	X	X
22	4122074-905	. Fuel Cap Flange Assembly	1	X	X	X
22A	4122074-11	. . Flange	1	X	X	X
–	MS29561-232	. . O-Ring	1	X	X	X
23	AN525-416R8	. Screw	10	X	X	X
23∞	AN525-416R10	. Screw	2	X	X	X
23A†	AN525-416R14	. Screw	6		X	X
–∞	NAS1149C0463R	. Washer	2	X	X	X
24●	4122065-23	. Gasket	1	X	X	X
25●	4122065-15	. Cover Plate	1	X	X	X
26‡	4122071-1	. Dip Stick Tube	1	X	X	X
–	4122071-13	. Dip Stick	1	X	X	X
27†	4122065-33	. Cover	1		X	X
28†	AN525-416R10	. Screw	6		X	X
29†	ECD4092-1	. Fuel Quantity Transmitter	1		X	X
30†	4122084-1	. Flanged Cup Assembly	1		X	X
31†	NAS6604H2	. Bolt	6		X	X
–	MS20995C25	. . Safety Wire	A/R		X	X
32†	MS28775-233	. O-Ring	1		X	X
33†	4122084-13	. Spanner Nut	1		X	X
34†	4122065-35	. Gasket	1		X	X
35†	NAS1149F0432P	. Washer	6		X	X

UNCONTROLLED COPY WHEN DOWNLOADED OR PRINTED

Visit www.enstromhelicopter.com for instructions to order an original manual and to register for email notification of updates.

*	Used on serial numbers 5046, 5048 and subsequent, with indicator P/N ECD4038-5.
**	Effectivity 480B S/N 5147 and subsequent.
≡	See Appendix A for equivalent part information.
♦	Effectivity 480B S/N 5176 and subsequent. Retrofittable to 480 S/N 5001-5041, 480B S/N 5042 and subsequent.
●	Hardware for the previous fuel probe installation (prior to 480B S/N 5198). Replaced by new fuel probe system.
†	The new fuel probe installation hardware. Replaces previous fuel probe hardware. Effectivity 480B S/N 5198 and subsequent. Retrofittable to 480 S/N 5014-5041 and 480B S/N 5042 and subsequent modified in accordance with SIL T-061.
‡	480B S/N 5231 and subsequent and helicopters modified in accordance with SIL T-062 are not equipped with item 26.
°	Effectivity 480B S/N 5231 and subsequent. Retrofittable to 480B S/N 5042 and subsequent.
∞	Installed at the fuel cap flange assembly hinge. Effectivity 480B S/N 5231 and subsequent. Retrofittable to 480B S/N 5042 and subsequent.
♦♦	Effectivity 480B S/N 5251 and subsequent. Retrofittable to 480/480B S/N 5013 and subsequent.

UNCONTROLLED COPY WHEN DOWNLOADED OR PRINTED

Visit www.enstromhelicopter.com for instructions to order an original manual and to register for email notification of updates.

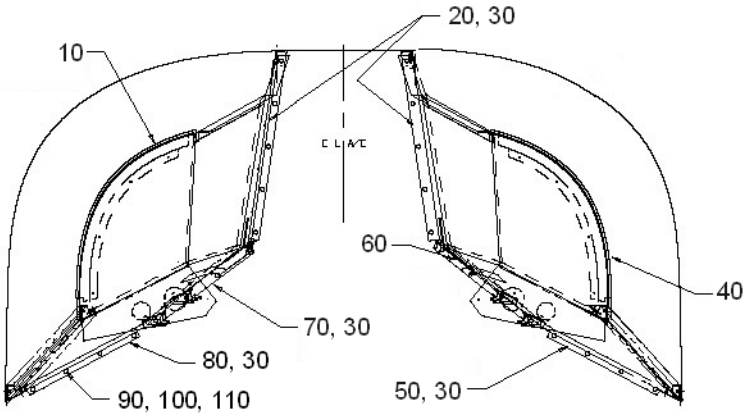

View Looking Forward

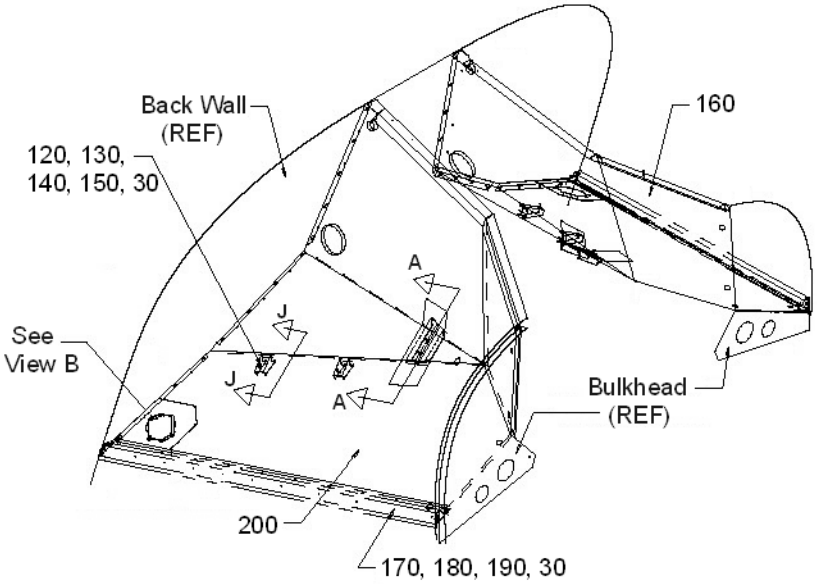

Isometric View from Left Side of Aircraft
Bladder Structure and Attachments

Sheet 1 of 4
480/480B: S/N 5001 and Subsequent

FIGURE 5-2 FUEL BLADDER STRUCTURE ASSY/INSTALL– AEROTECH/UFCC FUEL CELLS

UNCONTROLLED COPY WHEN DOWNLOADED OR PRINTED

Visit www.enstromhelicopter.com for instructions to order an original manual and to register for email notification of updates.

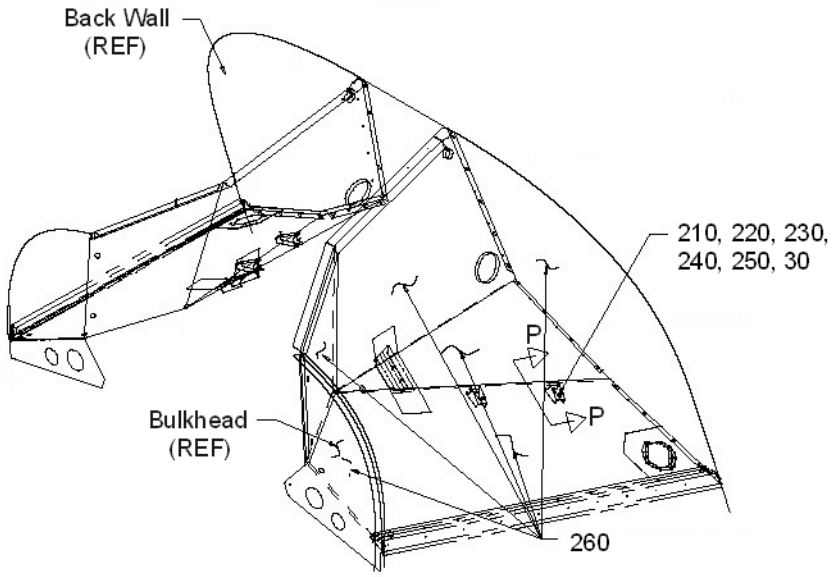

Isometric View From Right Side of Aircraft
Bladder Structure and Attachments

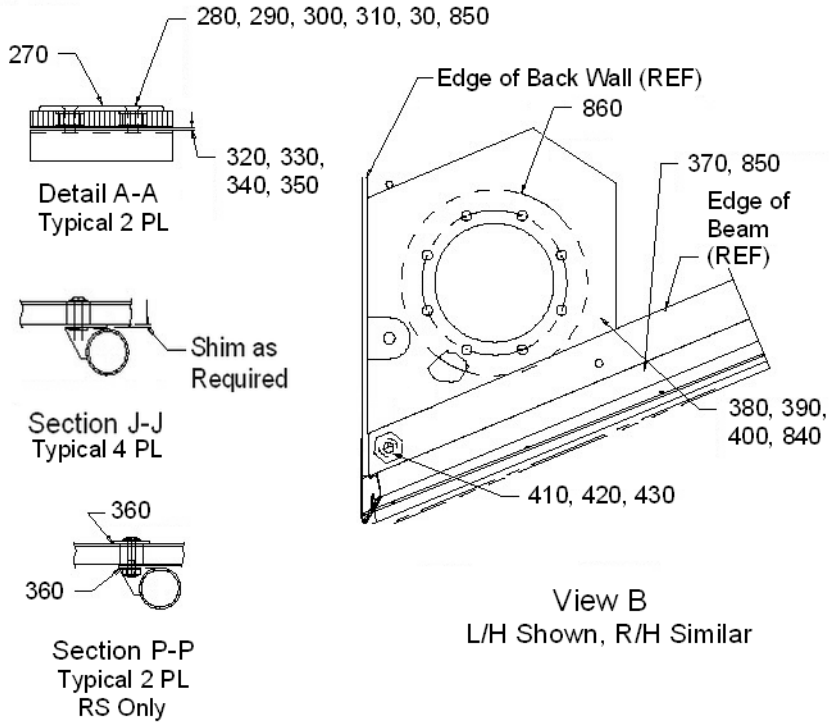

Sheet 2 of 4
480/480B: S/N 5001 and subsequent

FIGURE 5-2 FUEL BLADDER STRUCTURE ASSY/INSTALL– AEROTECH/UFCC FUEL CELLS

UNCONTROLLED COPY WHEN DOWNLOADED OR PRINTED

Visit www.enstromhelicopter.com for instructions to order an original manual and to register for email notification of updates.

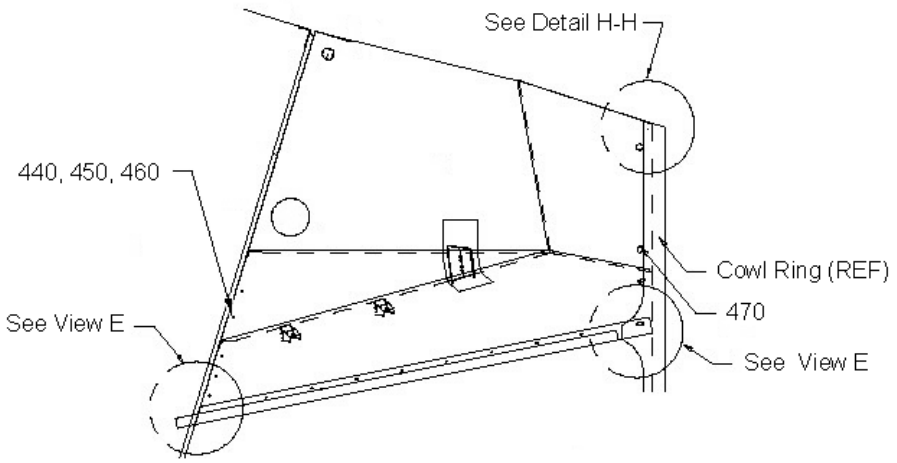

View Looking Inboard at Left Bladder,
Right Bladder Similar

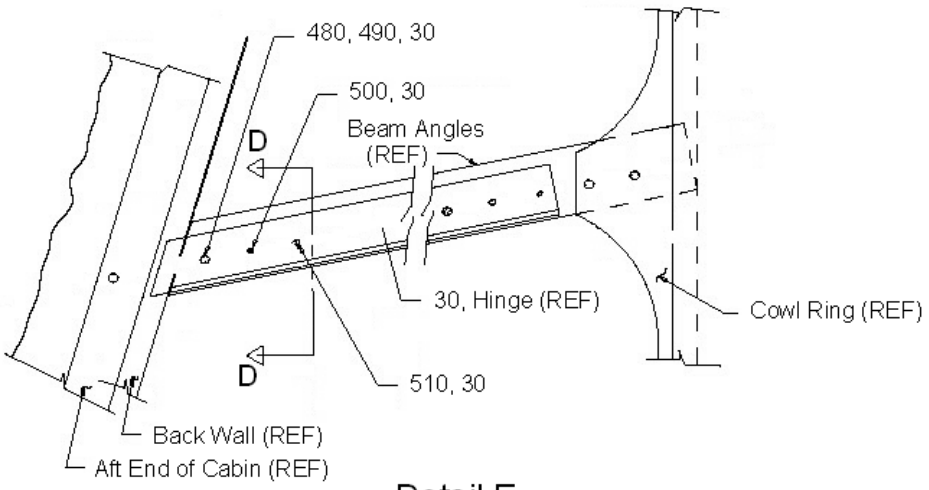

Detail E

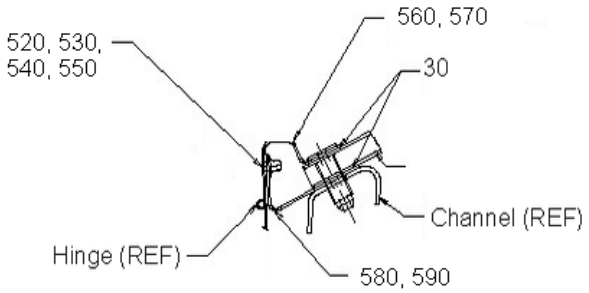

Detail D

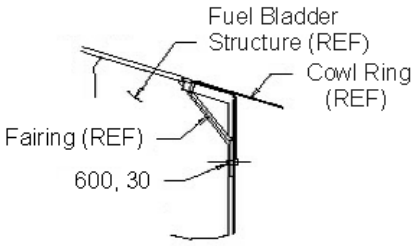

Detail H

Sheet 3 of 4
480/480B: S/N 5001 and subsequent

FIGURE 5-2 FUEL BLADDER STRUCTURE ASSY/INSTALL– AEROTECH/UFCC FUEL CELLS

UNCONTROLLED COPY WHEN DOWNLOADED OR PRINTED

Visit www.enstromhelicopter.com for instructions to order an original manual and to register for email notification of updates.

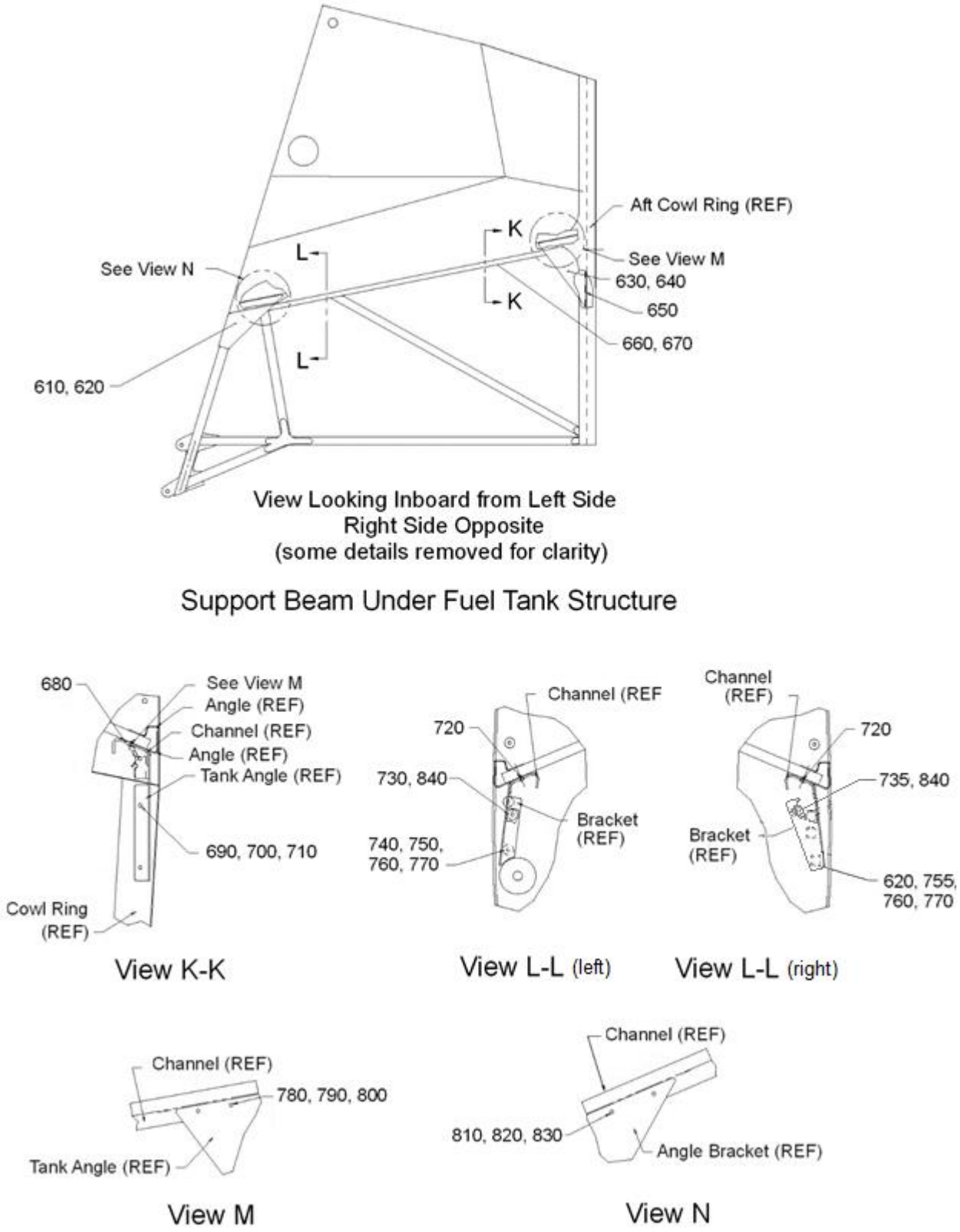

Sheet 4 of 4
480/480B: S/N 5001 and subsequent

FIGURE 5-2 FUEL BLADDER STRUCTURE ASSY/INSTALL– AEROTECH/UFCC FUEL CELLS

UNCONTROLLED COPY WHEN DOWNLOADED OR PRINTED

Visit www.enstromhelicopter.com for instructions to order an original manual and to register for email notification of updates.

FIGURE 5-2 FUEL BLADDER STRUCTURE ASSY/INSTALL– AEROTECH/UFCC FUEL CELLS

ITEM NUMBER	PART NUMBER	DESCRIPTION	QTY PER ASSY	EFFECTIVITY		
				TH-28	480	480B
–	4122061-5	Bladder Structure Assy/Install	REF		X	X
10	4122086-11	. Fairing Fuel Bladder Structure (L/H)	1		X	X
20	4122005-39	. Angle Fuel Tank Attach	2		X	X
30	PR1440B1/2QT	. . Sealant: Fuel Tank (See Note 2)	A/R		X	X
30	PR1440B2	. . Sealant: Fuel Tank (Alternate to PR1440B1/2QT)	A/R		X	X
40	4122086-12	. Fairing Fuel Bladder Structure (R/H)	1		X	X
50	4122005-20	. Angle Fuel Tank Attach	2		X	X
60	4122005-43	. Angle Fuel Tank Attach	1		X	X
70	4122005-41	. Angle Fuel Tank Attach	1		X	X
80	4122005-19	. Angle Fuel Tank Attach	2		X	X
90	MS24694-S56	. Screw, Machine	26		X	X
100	AN960-10L	. Washer, Flat	26		X	X
110	AN364-1032A	. Nut, Hex	26		X	X
120	NAS1833-3-500	. Insert, Threaded	2		X	X
130	AN525-10R14	. Screw, Machine	2		X	X
140	AN960-10L	. Washer, Flat	2		X	X
150	AN364-1032A	. Nut, Hex	2		X	X
160	4122044-2	. Fuel Bladder Structure Assy (R/H)	1		X	X
170	AN525-10R12	. Screw, Machine	20		X	X
180	AN960-10L	. Washer, Flat	20		X	X
190	AN364-1032A	. Nut, Hex	20		X	X
200	4122044-1	. Fuel Bladder Structure Assy (L/H)	1		X	X
210	NAS1833-3-500	. Insert, Threaded	2		X	X
220	AN525-10R16	. Screw, Machine	2		X	X
230	AN970-3	. Washer, Flat (Use Under Head)	2		X	X
240	AN960-10L	. Washer, Flat (Use Under Nut)	2		X	X
250	AN364-1032A	. Nut, Hex	2		X	X
260*	1238716	. . Electrodag	A/R		X	X
270	4122005-49	. Washer	2		X	X
280	NAS1833-3-500	. Insert, Threaded	2		X	X
290	MS24694-S301	. Screw, Machine	2		X	X
300	AN364-428A	. Nut, Hex	2		X	X
310	AN960-416L	. Washer, Flat	2		X	X
320	4122038-11	. Shim, Fuel Bladder Structure	A/R		X	X
330	4122038-13	. Shim, Fuel Bladder Structure	A/R		X	X
340	4122038-15	. Shim, Fuel Bladder Structure	A/R		X	X

UNCONTROLLED COPY WHEN DOWNLOADED OR PRINTED

Visit www.enstromhelicopter.com for instructions to order an original manual and to register for email notification of updates.

FIGURE 5-2 FUEL BLADDER STRUCTURE ASSY/INSTALL– AEROTECH/UFCC FUEL CELLS

ITEM NUMBER	PART NUMBER	DESCRIPTION	QTY PER ASSY	EFFECTIVITY		
				TH-28	480	480B
350	4122038-17	. Shim, Fuel Bladder Structure	A/R		X	X
360*	CP8-TB	. . Kopr- Shield,	A/R		X	X
370	NAS1833-3-500	. Insert, Threaded	20		X	X
380	4122062-11	. Flange Plate Fuel Structure	1		X	X
390	4122062-13	. Flange Plate Fuel Structure	1		X	X
400	EA9309NA	. . Adhesive; Structural Epoxy	A/R		X	X
410	28-12429-9	. Fitting, Drain Outlet	2		X	X
420	AN960-716	. Washer, Flat (Use on Far Side)	2		X	X
430	AN924-4D	. Nut, Tube	2		X	X
440	AN525-832R7	. Screw, Machine	10		X	X
450	AN960-8L	. Washer; Flat	10		X	X
460	AN364-832A	. Nut, Hex	10		X	X
470	AN526-1032R6	. Screw, Machine	8		X	X
480	NAS1068A3	. Nut Plate	13		X	X
490	CCR264SS-3-02	. Rivet	26		X	X
500	CR3212-4-03	. Rivet	9		X	X
510	CR3212-4-03	. Rivet	10		X	X
520	NAS1068A3	. Nut Plate	10		X	X
530	CCR264SS-3-02	. Rivet	2		X	X
540	CR3212-4-02	. Rivet	10		X	X
550	CR3212-4-03	. Rivet	10		X	X
560	4122047-19	. Angle Beam	1		X	X
570	4122047-20	. Angle Beam	1		X	X
580	4122047-17	. Angle Beam	1		X	X
590	4122047-18	. Angle Beam	1		X	X
600	MS20470AD4-4	. Rivet	4		X	X
610	4122085-13	. Angle Bracket Fuel Tank Support	1		X	X
620**	4122085-24	. Angle Bracket Fuel Tank Support	1		X	X
620	4122085-14	. Angle Bracket Fuel Tank Support (Superseded by 4122085-24)	1		X	X
630	4122085-15	. Tank Angle Fuel Structure	1		X	X
640	4122085-16	. Tank Angle Fuel Structure	1		X	X
650	4122047-17	. Angle Beam	1		X	X
660	4122085-21	. Channel Fuel Tank Support (LH)	1		X	X
670	4122085-22	. Channel Fuel Tank Support (RH)	1		X	X
680	4122047-19	. Angle Beam	1		X	X
690	MS27039-1-11	. Screw, Machine	3		X	X
700	AN960-10	. Washer, Flat	6		X	X
710	AN364-1032A	. Nut, Hex	3		X	X

UNCONTROLLED COPY WHEN DOWNLOADED OR PRINTED

Visit www.enstromhelicopter.com for instructions to order an original manual and to register for email notification of updates.

FIGURE 5-2 FUEL BLADDER STRUCTURE ASSY/INSTALL– AEROTECH/UFCC FUEL CELLS

ITEM NUMBER	PART NUMBER	DESCRIPTION	QTY PER ASSY	EFFECTIVITY		
				TH-28	480	480B
720	CR3213-5-03	. Rivet	38		X	X
730	NAS1834A3-500	. Insert	1		X	X
735	NAS1834A3K500	. Insert	1		X	X
740	4122085-13	. Angle Bracket Fuel Tank Support	2		X	X
750	MS27039-1-16	. Screw, Machine	2		X	X
755	MS24694-S58	. Screw	2		X	X
760	AN960-10	. Washer, Flat	4		X	X
770	AN364-1032A	. Nut, Hex	2		X	X
780	MS27039-1-09	. Screw, Machine	4		X	X
790	AN960-10	. Washer, Flat	8		X	X
800	AN364-1032A	. Nut, Hex	4		X	X
810	MS27039-1-09	. Screw, Machine	4		X	X
820	AN960-10	. Washer, Flat	8		X	X
830	AN364-1032A	. Nut, Hex	4		X	X
840	EC-776	. . Sealant: Tank, Fuel Resistant (See Note 1)	A/R		X	X
850	EA9394	. . Adhesive: Structural Epoxy (See Note 3)	A/R		X	X
860	TF3056FR	. . Compound: Potting (See Note 4)	A/R		X	X

Note 1 Use EC-776 fire resistant tank sealant to coat the interior of the fuel bladder structure and the backwall.

Note 2 Use PR1440B1/2QT fuel tank sealant to seal the backwall to the structure joints and to the beam, cowl ring, and cabin.

Note 3 Pot inserts with EA9394 structural epoxy adhesive per SP-141.

Note 4 Edge fill with TF3056FR potting compound.

* Effectivity 480 S/N 5001, 480B S/N 5042 – 5197. No longer installed on 480B S/N 5198 and subsequent.

** Effectivity 480B S/N 5176 and subsequent. Retrofittable to 480 S/N 5001, 480B S/N 5042 and subsequent.

UNCONTROLLED COPY WHEN DOWNLOADED OR PRINTED

Visit www.enstromhelicopter.com for instructions to order an original manual and to register for email notification of updates.

INTENTIONALLY LEFT BLANK

UNCONTROLLED COPY WHEN DOWNLOADED OR PRINTED

Visit www.enstromhelicopter.com for instructions to order an original manual and to register for email notification of updates.

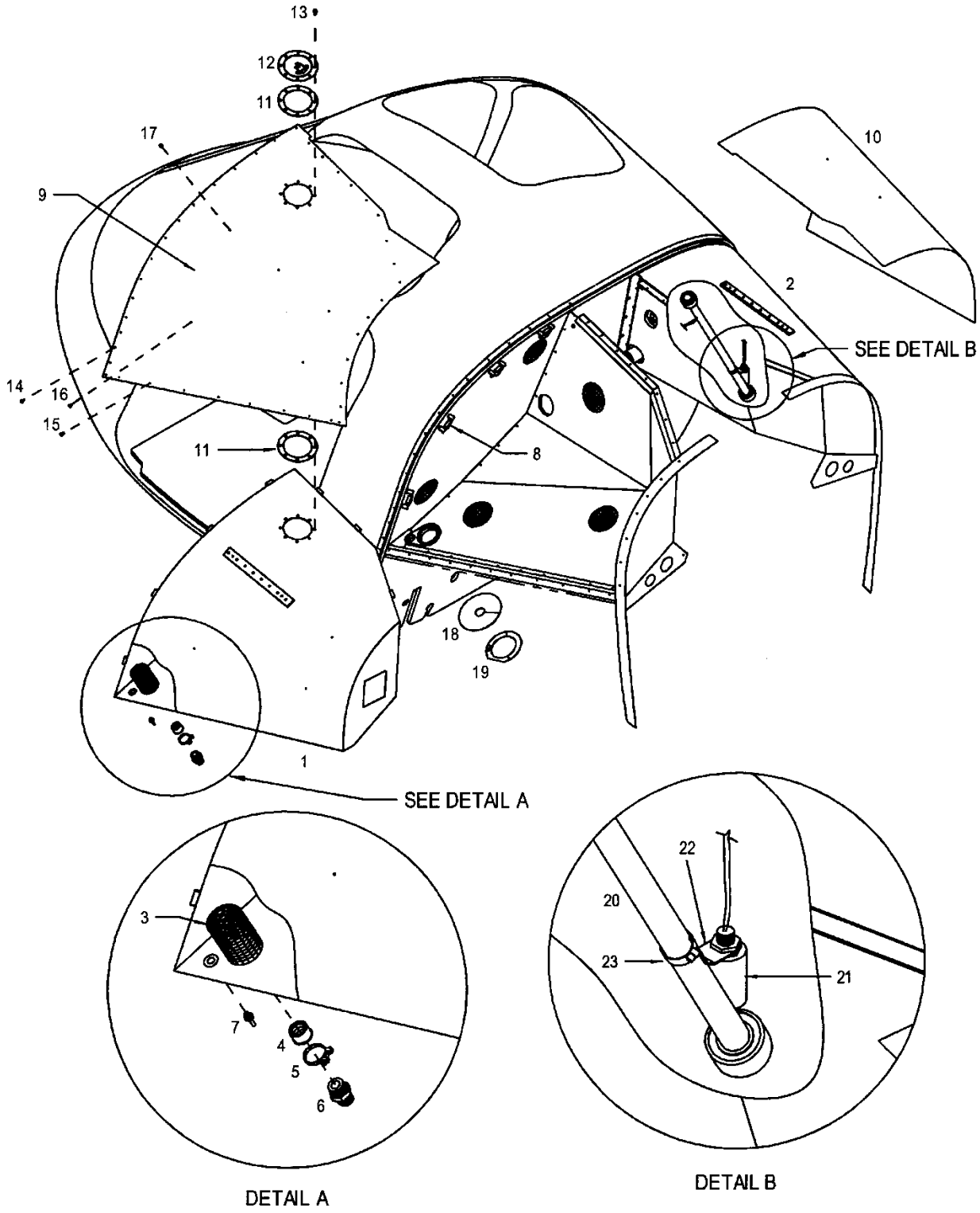

480: S/N 5001-5009
TH-28: 3006

FIGURE 5-3. FUEL CELL INSTALLATION – AERAZUR FUEL CELLS

UNCONTROLLED COPY WHEN DOWNLOADED OR PRINTED

Visit www.enstromhelicopter.com for instructions to order an original manual and to register for email notification of updates.

FIGURE 5-3. FUEL CELL INSTALLATION – AERAZUR FUEL CELLS

ITEM NUMBER	PART NUMBER	DESCRIPTION	QTY PER ASSY	EFFECTIVITY		
				TH-28	480	480B
1	4122009-1	. Fuel Bladder, L/H	1	X	X	
2	4122009-2	. Fuel Bladder, R/H	1	X	X	
3	4122021-1	. Fuel Strainer	2	X	X	
4	4122022-11	. Fitting	2	X	X	
5	ECD4036-150	. Clamp	2	X	X	
6	4129054-39	. Fitting	2		X	
6	4129054-25	. Fitting (Superseded by 4129054-39)	2	X	X	
6	4129054-13	. Fitting (Superseded by 4129054-25)	2	X	X	
7	4122034-11	. Valve	2	X	X	
8	4122041-3	. Bracket	8	X	X	
9	4119333-3	. Fuel Cell Cover	1	X	X	
10	4119333-4	. Fuel Cell Cover	1	X	X	
11	4122019-13	. Gasket	2	X	X	
12	4122074-903	. Fuel Filler Cap Assembly	1	X	X	
13	AN525-416R6	. Screw	8	X	X	
14*	AN525-10R7	. Screw	64	X	X	
15*	AN525-10R10	. Screw	28	X	X	
16	AN525-832R8	. Screw	7	X	X	
17	AN525-10R8	. Screw	4	X	X	
18	4119519-21	. Patch	2	X	X	
19	4119522-15	. Ring (L/H)	1	X	X	
19	4119522-16	. Ring (R/H)	1	X	X	
–	CR3214-4-02	. Rivet	8	X	X	
20	020-986-001	. Fuel Quantity Probe	1	X	X	
–	QS200-M28S	. Clamp	2	X	X	
21	GF-5500-88	. Float Switch	1	X	X	
22	4122016-5	. Bracket, Float Switch	1	X	X	
23	QS200-M10S	. Clamp	1	X	X	
–	4122071-13	. Dip Stick (Fuel Quantity)	1	X	X	

* Quantity may vary on early production aircraft.

UNCONTROLLED COPY WHEN DOWNLOADED OR PRINTED

Visit www.enstromhelicopter.com for instructions to order an original manual and to register for email notification of updates.

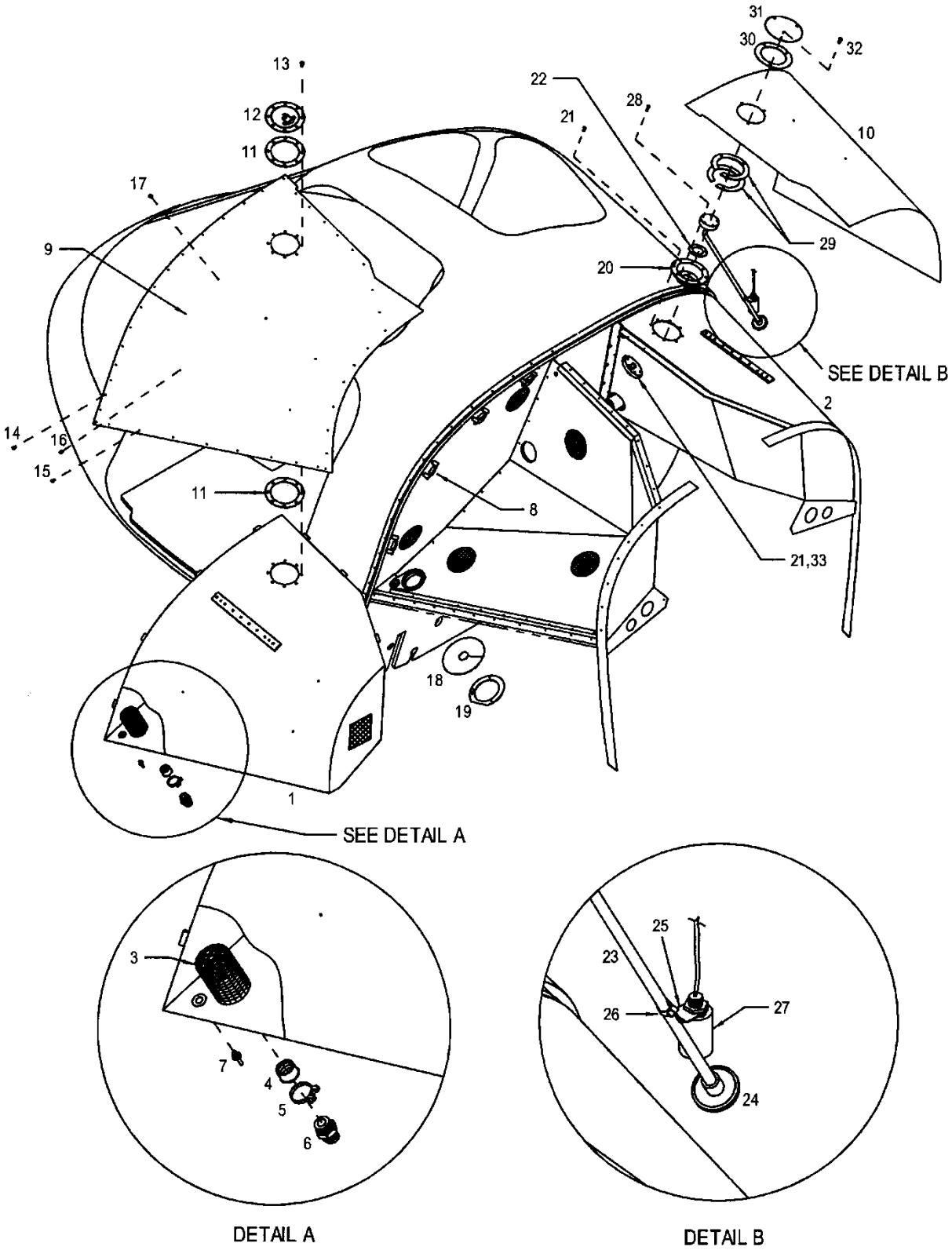

NOTE: Flanged mounted fuel quantity probe. 480: S/N 5011 and 5012

FIGURE 5-4. FUEL CELL INSTALLATION – AERAZUR FUEL CELLS S/N 5011 AND 5012

UNCONTROLLED COPY WHEN DOWNLOADED OR PRINTED

Visit www.enstromhelicopter.com for instructions to order an original manual and to register for email notification of updates.

FIGURE 5-4. FUEL CELL INSTALLATION – AERAZUR FUEL CELLS S/N 5011 AND 5012

ITEM NUMBER	PART NUMBER	DESCRIPTION	QTY PER ASSY	EFFECTIVITY		
				TH-28	480	480B
1	4122009-1	. Fuel Bladder, L/H	1		X	
2	4122009-4	. Fuel Bladder, R/H	1		X	
3	4122021-1	. Fuel Strainer	2		X	
4	4122022-11	. Fitting	2		X	
5	ECD4036-150	. Clamp	2		X	
6	4129054-39	. Fitting	2		X	
6	4129054-25	. Fitting (Superseded by 4129054-39)	2		X	
6	4129054-13	. Fitting (Superseded by 4129054-25)	2		X	
7	4122034-11	. Valve	2		X	
8	4122041-3	. Bracket	8		X	
9	4119333-3	. Fuel Cell Cover	1		X	
10	4119333-4	. Fuel Cell Cover	1		X	
11	4122065-23	. Gasket	2		X	
12	4122074-903	. Fuel Filler Cap Assembly	1		X	
13	AN525-416R6	. Screw	8		X	
14*	AN525-10R7	. Screw	64		X	
15*	AN525-10R10	. Screw	28		X	
16	AN525-832R8	. Screw	7		X	
17	AN525-10R8	. Screw	4		X	
18	4119519-21	. Patch	2		X	
19	4119522-15	. Ring (L/H)	1		X	
19	4119522-16	. Ring (R/H)	1		X	
–	CR3214-4-02	. Rivet	8		X	
20	4122048-1	. Flanged Mount Plate Assembly	1		X	
21≡	MS24694-S95	. Screw	11		X	
22	ECD4037-11	. Gasket	1		X	
23	ECD4037-3	. Fuel Quantity Probe	1		X	
24	4122068-11	. Collar	1		X	
25	4122016-23	. Bracket, Float Switch	1		X	
26	QS200-M12S	. Clamp	1		X	
27	GF-5500-88	. Float Switch	1		X	
28	MS35207-265	. Screw	5		X	
29	4122065-19	. Spacer	2		X	
30	4122065-23	. Gasket	1		X	

UNCONTROLLED COPY WHEN DOWNLOADED OR PRINTED

Visit www.enstromhelicopter.com for instructions to order an original manual and to register for email notification of updates.

FIGURE 5-4. FUEL CELL INSTALLATION – AERAZUR FUEL CELLS S/N 5011 AND 5012

ITEM NUMBER	PART NUMBER	DESCRIPTION	QTY PER ASSY	EFFECTIVITY		
				TH-28	480	480B
31	4122065-17	. Cover Plate.	1		X	
32	AN525-416R10	. Screw	3		X	
33	4122069-11	. Flanged Plate	1		X	
–	4122071-13	. Dip Stick (Fuel Quantity)	1		X	

* Quantity may vary.

≡ See Appendix A for equivalent part information.

UNCONTROLLED COPY WHEN DOWNLOADED OR PRINTED

Visit www.enstromhelicopter.com for instructions to order an original manual and to register for email notification of updates.

INTENTIONALLY LEFT BLANK

UNCONTROLLED COPY WHEN DOWNLOADED OR PRINTED

Visit www.enstromhelicopter.com for instructions to order an original manual and to register for email notification of updates.

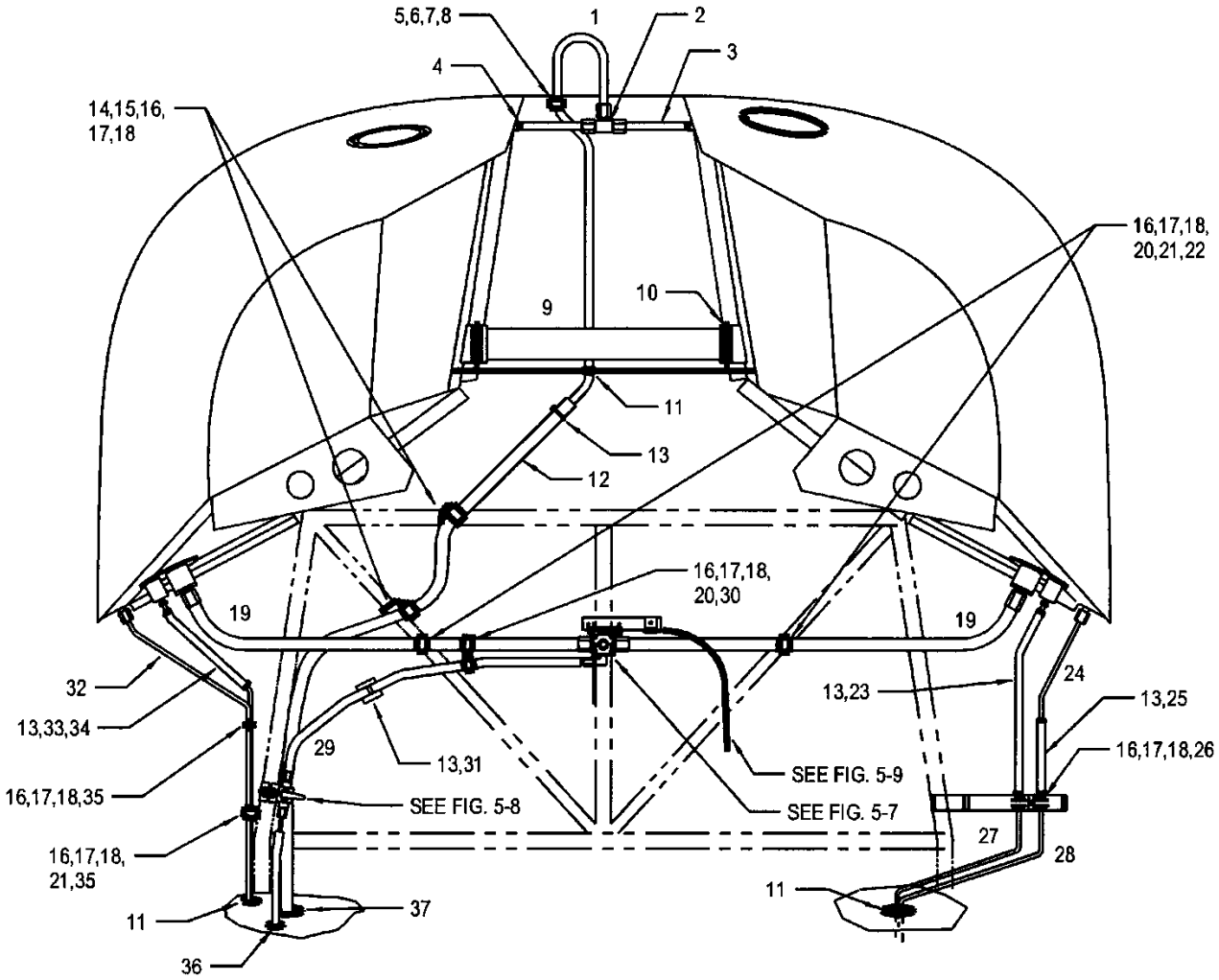

480/480B: S/N 5013-5032, 5039 through 5113.
TH-28: 3007 and subs.

Sheet 1 of 3

FIGURE 5-5. FUEL LINE INSTALLATION – AEROTECH/UFCC FUEL CELLS

UNCONTROLLED COPY WHEN DOWNLOADED OR PRINTED

Visit www.enstromhelicopter.com for instructions to order an original manual and to register for email notification of updates.

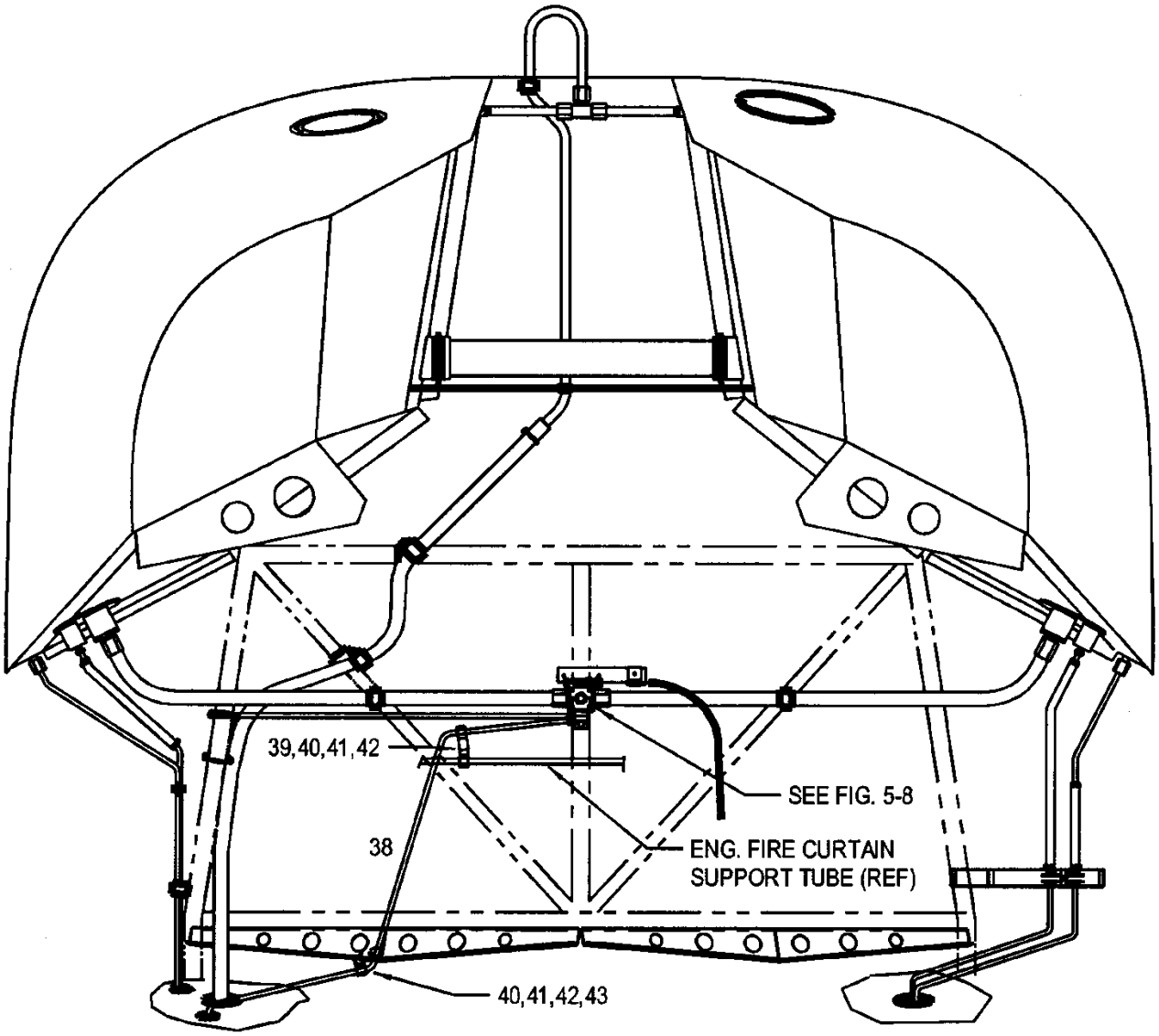

Same as Sheet 1 except as noted.

Sheet 2 of 3

480: S/N 5033-5038

FIGURE 5-5. FUEL LINE INSTALLATION – AEROTECH/UFCC FUEL CELLS

UNCONTROLLED COPY WHEN DOWNLOADED OR PRINTED

Visit www.enstromhelicopter.com for instructions to order an original manual and to register for email notification of updates.

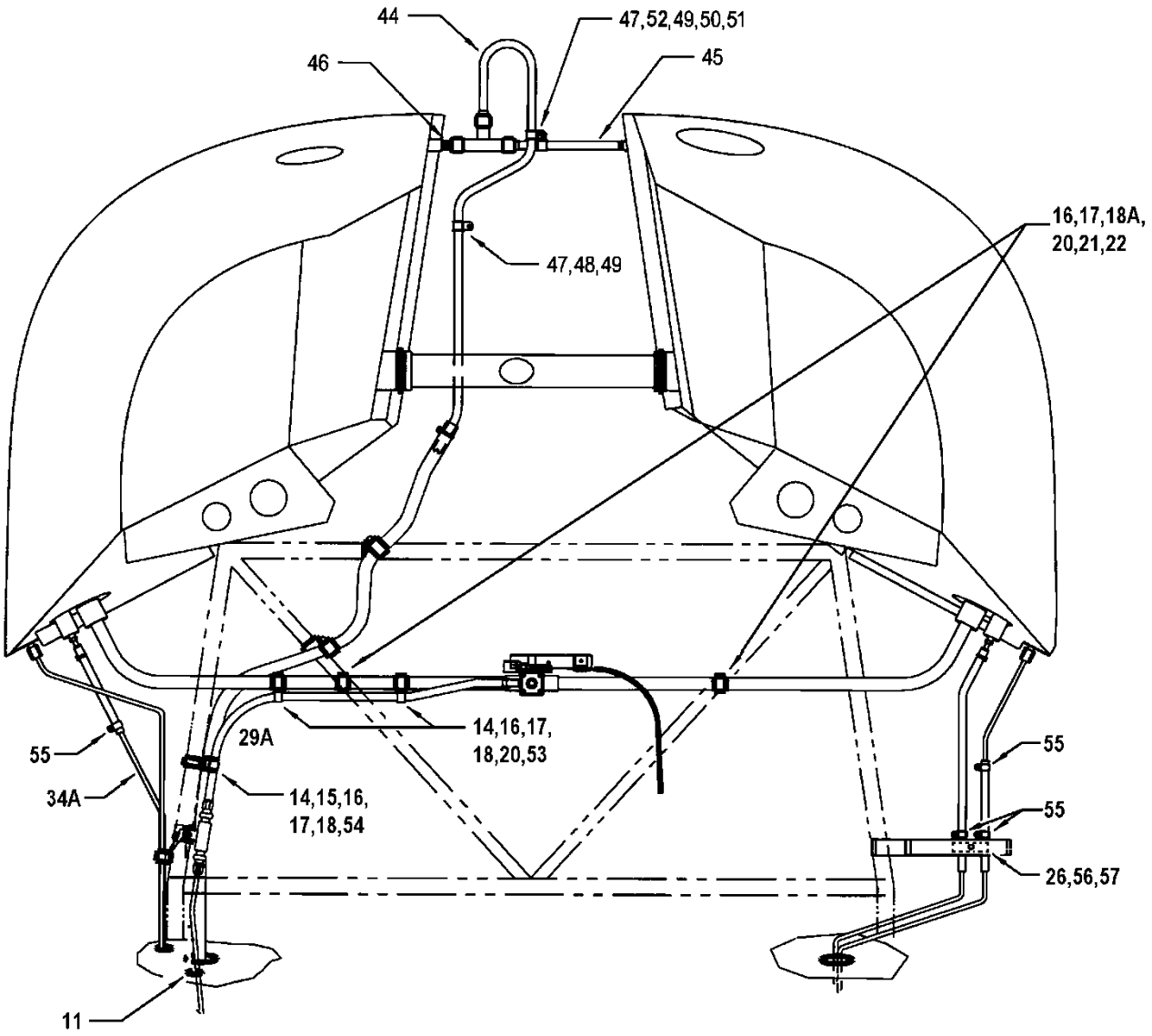

Sheet 3 of 3
480/B: S/N 5114 and subsequent

Same as Sheet 1 except as noted.

480B equipped with increased cooling kit, P/N 4230031

FIGURE 5-5. FUEL LINE INSTALLATION – AEROTECH/UFCC FUEL CELLS

UNCONTROLLED COPY WHEN DOWNLOADED OR PRINTED

Visit www.enstromhelicopter.com for instructions to order an original manual and to register for email notification of updates.

FIGURE 5-5. FUEL LINE INSTALLATION – AEROTECH/UFCC FUEL CELLS

ITEM NUMBER	PART NUMBER	DESCRIPTION	QTY PER ASSY	EFFECTIVITY		
				TH-28	480	480B
1	4122030-5	. Vent Line	1	X	X	X
2	AN824-8D	. Tee	1	X	X	X
3	4122030-7	. Vent Line	2	X	X	X
4	NAS1922-0100-3	. Clamp	2	X	X	X
5	AN520-10R16	. Screw	1	X	X	X
6	SM21919F8	. Clamp	1	X	X	X
7	AN960-10L	. Washer	1	X	X	X
8	AN364-1032A	. Nut	1	X	X	X
9	4122059-3	. Crossover	1	X	X	X
10	NAS1922-0225-3	. Clamp	2	X	X	X
11	MS35489-14	. Grommet	3	X	X	X
12	4122035-5	. Hose Assembly	1	X	X	X
–	801-8	. . Hose	50”	X	X	X
–	4120038-25	. . Placard	1	X	X	X
13	SST1M-MP	. Tie Wrap	8	X	X	X
14	MS21919WCJ14	. Clamp	2	X	X	X
15	MS21919WCJ16	. Clamp	2	X	X	X
16	MS35206-246	. Screw	9	X	X	X
17	NAS1149FN816P	. Washer	18	X	X	X
18	MS21042-08	. Nut	9	X	X	X
18A	S8P150	. Plus Nut	2	X	X	X
19	4122025-3	. Fuel Line	2	X	X	X
20	MS21919WCJ18	. Clamp	3	X	X	X
21	AN743-13	. Bracket	3	X	X	X
22	CR3213-4-02	. Rivet	4	X	X	X
23	4122035-3	. Hose Assembly	1	X	X	X
–	801-4	. . Hose	16”	X	X	X
–	4120038-23	. . Placard	1	X	X	X
24	4122029-3	. Drain Line	1	X	X	X
25	4122035-1	. Drain Hose Assembly	1	X	X	X
26	MS21919WCJ8	. Clamp	2	X	X	X
27*	4122037-14	. Drain Line	1		X	X
27	4122037-12	. Drain Line (Obsolete)	1	X	X	X
28*	4122037-13	. Drain Line	1		X	X
28	4122037-11	. Drain Line (Obsolete)	1	X	X	X
29	LW12878-4S-260	. Hose Assembly	1	X	X	X

UNCONTROLLED COPY WHEN DOWNLOADED OR PRINTED

Visit www.enstromhelicopter.com for instructions to order an original manual and to register for email notification of updates.

FIGURE 5-5. FUEL LINE INSTALLATION – AEROTECH/UFCC FUEL CELLS

ITEM NUMBER	PART NUMBER	DESCRIPTION	QTY PER ASSY	EFFECTIVITY		
				TH-28	480	480B
29A	4122026-9	. Hose Assembly	1		X	X
30	MS21919WF10	. Clamp	1	X	X	X
31	ABMS-A	. Mount	1	X	X	X
32	4122029-1	. Drain Line Assembly	1	X	X	X
33	4122035-1	. Drain Hose Assembly	1	X	X	X
–	801-4	. . Hose	12”	X	X	X
–	4120038-23	. . Placard	1	X	X	X
34	4122029-15	. Drain Line	1	X	X	X
34A	4122029-7	. Drain Line Assembly	1		X	X
35	444-4-2-6	. Clamp	2	X	X	X
36	MS35489-14	. Grommet	1	X	X	X
37	MS35489-20	. Grommet	1	X	X	X
38	4122028-3	. Drain Line	1	X	X	X
39	MS21919WF4	. Clamp	2	X	X	X
40	AN525-8R7	. Screw	2	X	X	X
41	AN960-8L	. Washer	4	X	X	X
42	AN364-832A	. Nut	2	X	X	X
43	786-4-CU	. Clamp	1	X	X	X
44	4122030-9	. Vent Line Assembly	1		X	X
45	4122030-105	. Vent Line Assembly	1		X	X
46	4122030-101	. Vent Line Assembly	1		X	X
47	MS21919WCJ8	. Clamp	3		X	X
48	MS35206-244	. Screw	2		X	X
49	NAS1149FN816P	. Washer	3		X	X
50	MS35338-244	. Lock Washer	1		X	X
51	MS21042-08	. Nut	1		X	X
52	MS35206-246	. Screw	1		X	X
53	MS35333-40	. Lock Washer	2		X	X
54	MS21919WCJ12	. Clamp	1		X	X
55	#1	. Clamp	4		X	X
56	AN3-4A	. Bolt	1		X	X
57	NAS1149F0332P	. Washer	1		X	X

* Effectivity S/N 5147 and subsequent.

UNCONTROLLED COPY WHEN DOWNLOADED OR PRINTED

Visit www.enstromhelicopter.com for instructions to order an original manual and to register for email notification of updates.

INTENTIONALLY LEFT BLANK

UNCONTROLLED COPY WHEN DOWNLOADED OR PRINTED

Visit www.enstromhelicopter.com for instructions to order an original manual and to register for email notification of updates.

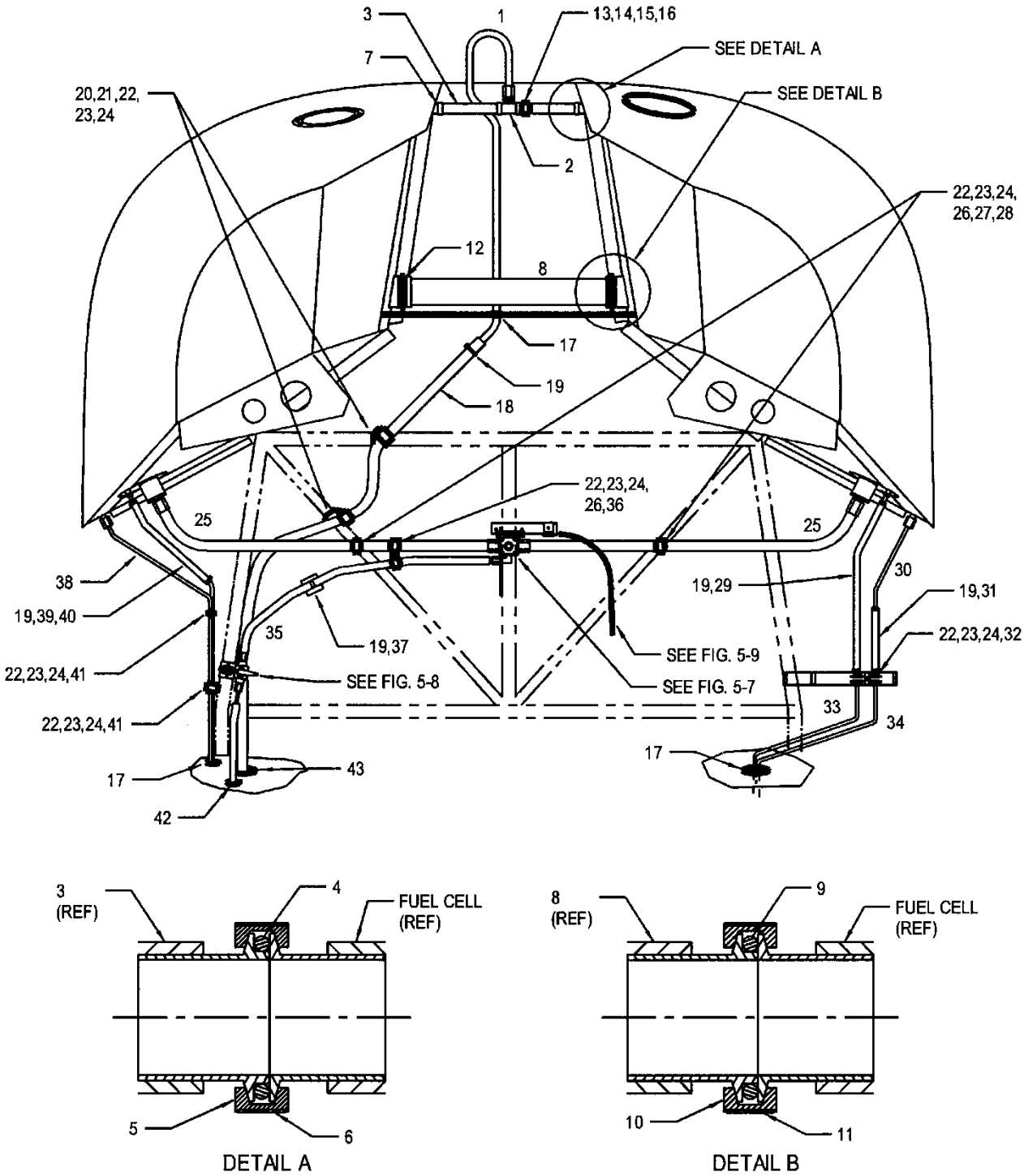

480: S/N 5001-5012

TH-28: 3006

FIGURE 5-6. FUEL LINE INSTALLATION – AERAZUR FUEL CELLS

UNCONTROLLED COPY WHEN DOWNLOADED OR PRINTED

Visit www.enstromhelicopter.com for instructions to order an original manual and to register for email notification of updates.

FIGURE 5-6. FUEL LINE INSTALLATION – AERAZUR FUEL CELLS

ITEM NUMBER	PART NUMBER	DESCRIPTION	QTY PER ASSY	EFFECTIVITY		
				TH-28	480	480B
1*	4122030-5	. Vent Line	1	X	X	
2*	4122014-15	. Vent Tee Fitting	1	X	X	
3▲	60434	. Vent Hose Assembly	1	X	X	
4▲	76642	. O-Ring	2	X	X	
5	500130	. Clamp Set	2	X	X	
6▲	65143	. Clamping Band	2	X	X	
7	QS200-M10S	. Clamp	2	X	X	
8▲	60652	. Crossover Line Assembly	1	X	X	
9▲	76638	. O-Ring	2	X	X	
10	500150	. Clamp Set	2	X	X	
11▲	76640	. Clamping Band	2	X	X	
12	QS200-M32S	. Clamp	2	X	X	
13	AN520-10R16	. Screw	1	X	X	
14	MS21919WDF14	. Clamp	1	X	X	
15	AN960-10L	. Washer	1	X	X	
16	AN364-1032A	. Nut	1	X	X	
17*	MS35489-14	. Grommet	3	X	X	
18*	801-8	. Hose	50"	X	X	
19	SST2S-MP	. Tie Wrap	8	X	X	
20	MS21919WF14	. Clamp	2	X	X	
21	MS21919WF16	. Clamp	2	X	X	
22	AN515-8R7	. Screw	9	X	X	
23	AN960-8L	. Washer	18	X	X	
24	AN364-832A	. Nut	9	X	X	
25	4122025-3	. Fuel Line	2	X	X	
26	MS21919WF18	. Clamp	3	X	X	
27	AN743-13	. Clip	3	X	X	
28	CR3213-4-02	. Rivet	4	X	X	
29	4122035-13	. Hose	1	X	X	
30	4122029-3	. Drain Line	1	X	X	
31	4122035-13	. Hose	1	X	X	

UNCONTROLLED COPY WHEN DOWNLOADED OR PRINTED

Visit www.enstromhelicopter.com for instructions to order an original manual and to register for email notification of updates.

FIGURE 5-6. FUEL LINE INSTALLATION – AERAZUR FUEL CELLS

ITEM NUMBER	PART NUMBER	DESCRIPTION	QTY PER ASSY	EFFECTIVITY		
				TH-28	480	480B
32	MS21919WF4	. Clamp	2	X	X	
33	4122037-12	. Drain Line	1	X	X	
33**	4122037-14	. Drain Line	1	X	X	
34	4122037-11	. Drain Line	1	X	X	
34**	4122037-13	. Drain Line	1	X	X	
35*	LW12878-4S-260	. Hose Assembly	1	X	X	
36	MS21919WF10	. Clamp	1	X	X	
37	ABMS-A	. Mount	1	X	X	
38	4122029-1	. Drain Line	1	X	X	
39	4122035-11	. Hose	1	X	X	
40	4122029-15	. Drain Line	1	X	X	
41	444-4-2-6	. Clamp	2	X	X	
42	MS35489-7	. Grommet	1	X	X	
43	MS35489-20	. Grommet	1	X	X	

* Early production vent line and sump drain line installations are obsolete. Replace using the items for later production aircraft.

** Effectivity S/N 5147 and subsequent.

▲ Not applicable to aircraft modified to Aerotech/UFCC fuel cells. (Refer to Figure 5-5 for item replacement.)

UNCONTROLLED COPY WHEN DOWNLOADED OR PRINTED

Visit www.enstromhelicopter.com for instructions to order an original manual and to register for email notification of updates.

INTENTIONALLY LEFT BLANK

UNCONTROLLED COPY WHEN DOWNLOADED OR PRINTED

Visit www.enstromhelicopter.com for instructions to order an original manual and to register for email notification of updates.

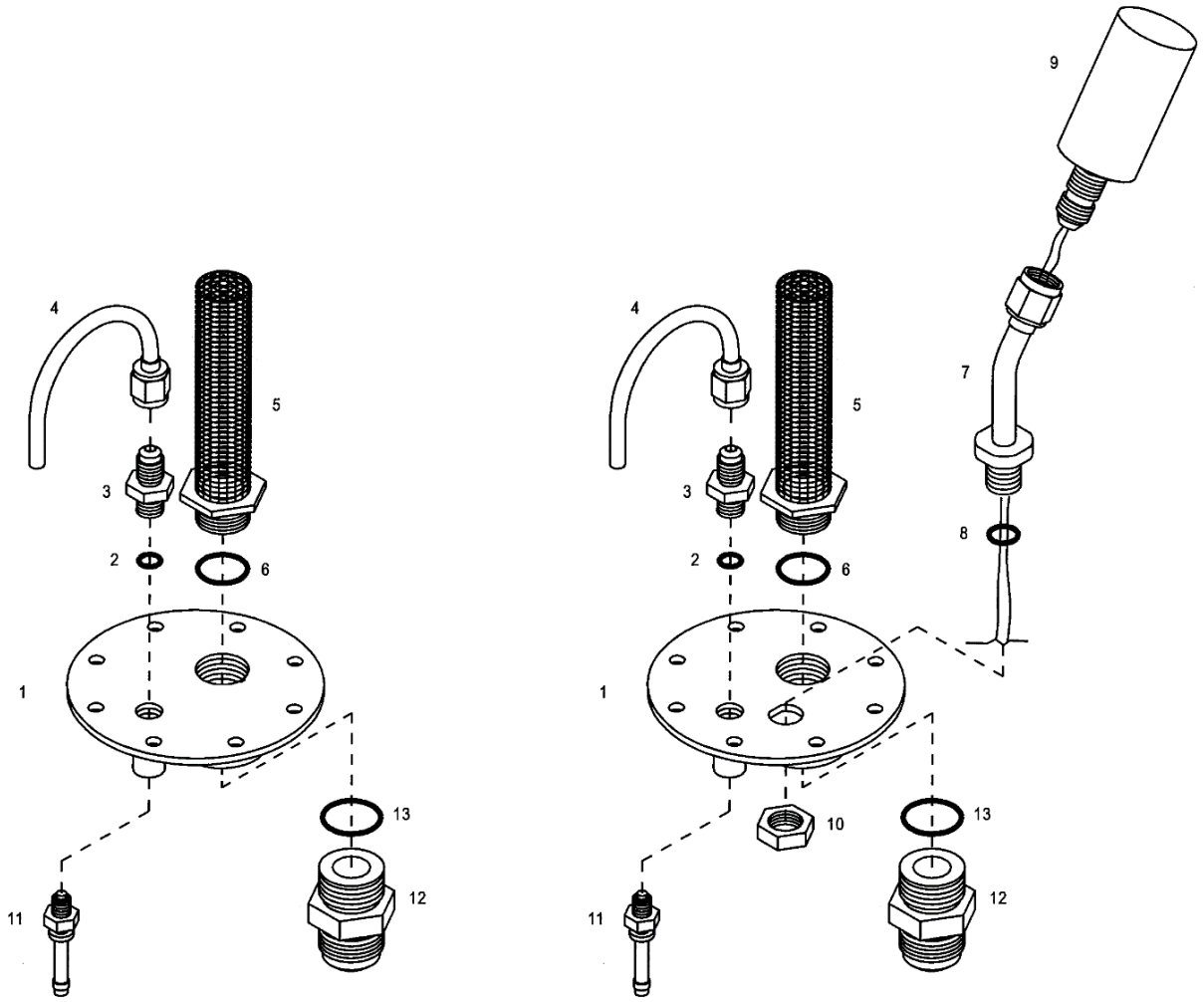

480/480B: S/N 5013 and Subs.
(earlier S/N modified to Aerotech/UFCC fuel cells)
TH-28: 3007 and Subs.

FIGURE 5-7. FLANGED PLATE ASSEMBLY – AEROTECH/UFCC FUEL CELLS

UNCONTROLLED COPY WHEN DOWNLOADED OR PRINTED

Visit www.enstromhelicopter.com for instructions to order an original manual and to register for email notification of updates.

FIGURE 5-7. FLANGED PLATE ASSEMBLY – AEROTECH/UFCC FUEL CELLS

ITEM NUMBER	PART NUMBER	DESCRIPTION	QTY PER ASSY	EFFECTIVITY		
				TH-28	480	480B
–**	4122057-3	. Flanged Plate Assembly, L/H	1	X	X	X
–**	4122057-4	. Flanged Plate Assembly, R/H	1	X	X	X
1	4122053-17	. . Flanged Plate (-3 Assy)	1	X	X	X
1	4122053-19	. . Flanged Plate (-4 Assy)	1	X	X	X
2*	MS29513-012	. . O-Ring	1	X	X	X
2*	MS29513-110	. . O-Ring (Superseded by MS29513-012)	1	X	X	X
3	4122056-11	. . Sump Fitting	1	X	X	X
4	4122060-1	. . Siphon Tube Assembly	1	X	X	X
–**	MS20995C32	. . Safety Wire	10 in.	X	X	X
5	4122055-3	. . Fuel Strainer Assembly	1	X	X	X
6*	MS29513-116	. . . O-Ring	1	X	X	X
7	4122070-1	. . Support Tube Assembly (-4 Assy)	1	X	X	X
8	MS29513-017	. . O-Ring (-4 Assy)	1	X	X	X
9	ECD4046-1	. . Float Switch (-4 Assy)	1	X	X	X
–	1-480319-0	. . . Housing: Cap, 2P Pin Contact	1	X	X	X
–	60618-1	. . . Contact: Pin	2	X	X	X
10	AN924-6D	. . Nut (-4 Assy)	1	X	X	X
11	4122034-11	. . Valve	1	X	X	X
–**	PR1440B2	. . .Sealant	1	X	X	X
12●	4129054-41	. . Fitting Assembly	1	X	X	X
12†	4129054-13	. . Fitting Assembly (Superseded by 4129054-41)	1	X	X	X
12	4129054-3	. . Fitting Assembly (Superseded by 4129054-13)	1	X	X	X
13	MS28778-12	. . . O-Ring	1	X	X	X

* Effectivity S/N 5088 and subsequent. Retrofittable to 480 S/N 5001, 480B S/N 5042 and subsequent.

** Effectivity S/N 5147 and subsequent. Retrofittable to 480 S/N 5001, 480B S/N 5042 and subsequent.

† Effectivity 480B S/N 5143 and subsequent. Retrofittable to 480 S/N 5001, 480B S/N 5042 and subsequent.

● Effectivity 480B S/N 5194 and subsequent. Retrofittable to 480 S/N 5001, 480B S/N 5042 and subsequent.

UNCONTROLLED COPY WHEN DOWNLOADED OR PRINTED

Visit www.enstromhelicopter.com for instructions to order an original manual and to register for email notification of updates.

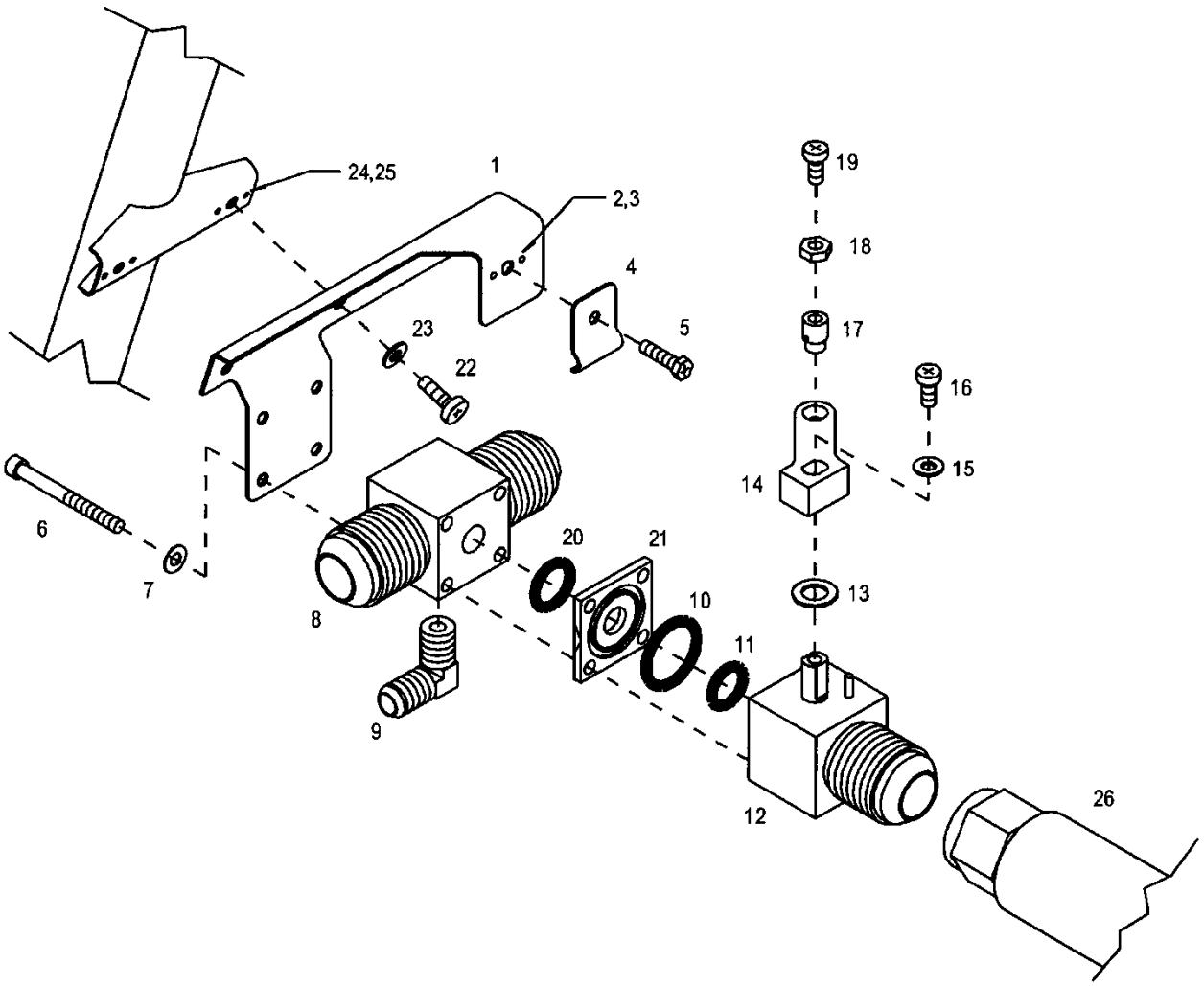

480: S/N 5001-5032
TH-28: 3006

Sheet 1 of 3

FIGURE 5-8. FUEL SHUTOFF VALVE ASSEMBLY

UNCONTROLLED COPY WHEN DOWNLOADED OR PRINTED

Visit www.enstromhelicopter.com for instructions to order an original manual and to register for email notification of updates.

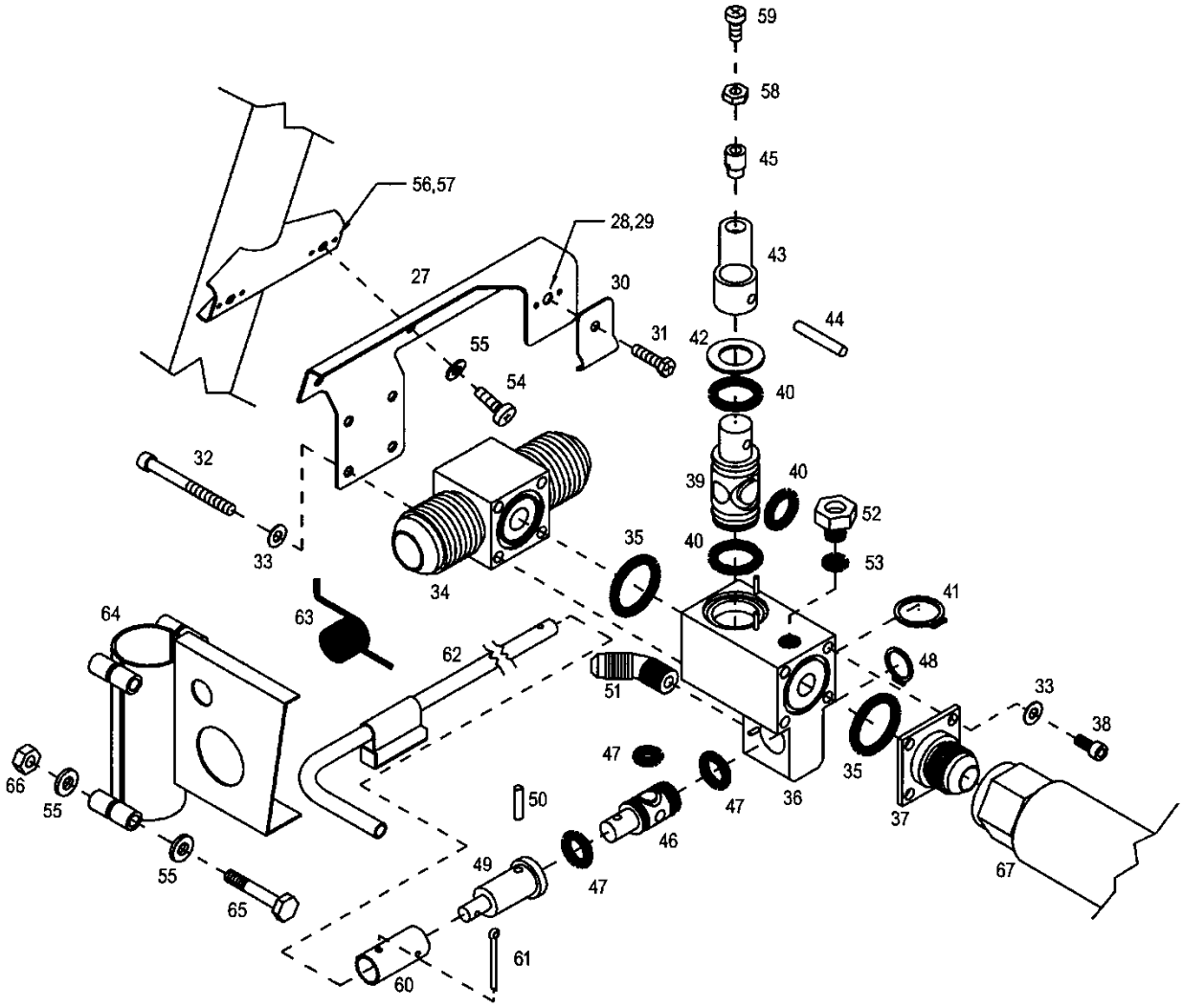

480: S/N 5033-5038

Sheet 2 of 3

FIGURE 5-8. FUEL SHUTOFF VALVE ASSEMBLY

UNCONTROLLED COPY WHEN DOWNLOADED OR PRINTED

Visit www.enstromhelicopter.com for instructions to order an original manual and to register for email notification of updates.

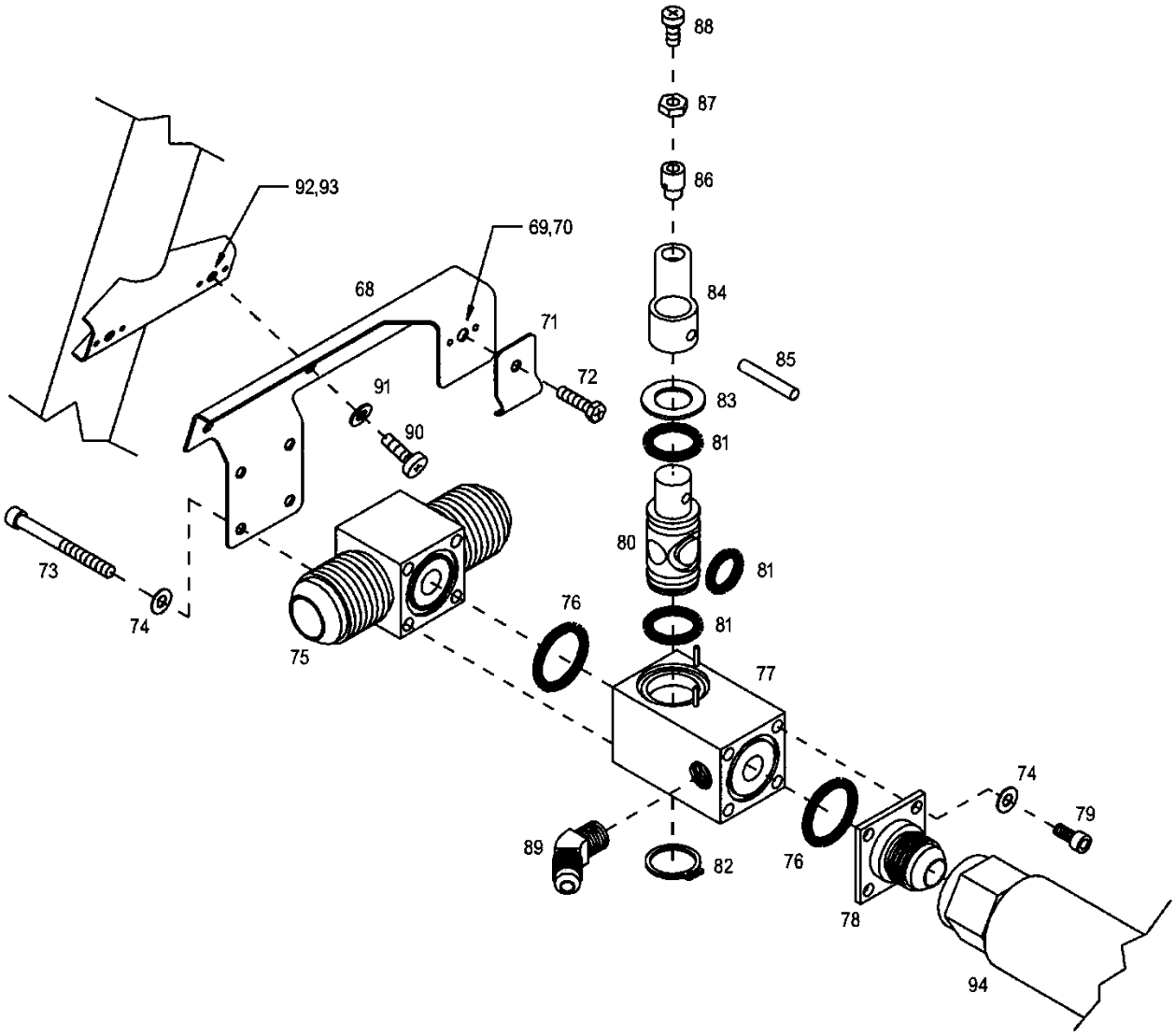

See Figure 5-9 for Fuel Shutoff Cable Installation

480/480B: S/N 5039 and subs.
TH-28: 3007 and subs.

Sheet 3 of 3

FIGURE 5-8. FUEL SHUTOFF VALVE ASSEMBLY

UNCONTROLLED COPY WHEN DOWNLOADED OR PRINTED

Visit www.enstromhelicopter.com for instructions to order an original manual and to register for email notification of updates.

FIGURE 5-8. FUEL SHUTOFF VALVE ASSEMBLY

ITEM NUMBER	PART NUMBER	DESCRIPTION	QTY PER ASSY	EFFECTIVITY		
				TH-28	480	480B
–	4122051-5	. Fuel Shutoff Valve Assembly	1	X	X	
1*	4122049-5	. . Bracket Assembly	1			
1*	4122049-3	. . Bracket Assembly (Superseded by 4122049-5)	1	X	X	
2	NAJ1-82	. . . Nut Plate	1	X	X	
3	MS20426AD3-3	. . . Rivet	2	X	X	
4*	4122049-19	. . . Clip	1	X	X	
4*	4122049-13	. . . Clip (Superseded by 4122049-19)	1	X	X	
5	NAS1096-2-10	. . . Screw	1	X	X	
6	23121DH	. . Screw	4	X	X	
7	AN960-8L	. . Washer	4	X	X	
8	4122024-5	. . Tee Assembly	1	X	X	
9	MS20822-4D	. . . Elbow	1	X	X	
10	MS28775-020	. . O-Ring	1	X	X	
11	MS28775-113	. . O-Ring	1	X	X	
12	HV79-13	. . Valve Assembly	1	X	X	
13	AN960-516L	. . Washer	1	X	X	
14	4122015-17	. . Arm	1	X	X	
15	AN960-8	. . Washer	1	X	X	
16 ≡	NK-500-8R6	. . Screw	1	X	X	
17●	4122015-25	. . Swivel	1	X	X	
17	4122015-19	. . Swivel (Superseded by 4122015-25)	1	X	X	
18	AN340-8	. Nut	1	X	X	
19	AN515-8R7	. Screw	1	X	X	
20	MS28775-014	. O-Ring (SIL T-006 Only)	1	X	X	
21	4122017-11	. Plate (SIL T-006 Only)	1	X	X	
22	MS27039-1-08	. Screw	2	X	X	
23	AN960-10	. Washer	2	X	X	
24	NAS1068-A3	. Nut Plate	2	X	X	
25	CCR264SS-3-3	. Rivet	4	X	X	
26	4122026-7	. Fuel Line Assembly	1	X	X	
–	4122051-7	. Fuel Shutoff Valve Assembly	1		X	
27*	4122049-5	. . Bracket Assembly	1		X	
27*	4122049-3	. . Bracket Assembly (Superseded by 4122049-5)	1		X	
28	NAJ1-82	. . . Nut Plate	1		X	

UNCONTROLLED COPY WHEN DOWNLOADED OR PRINTED

Visit www.enstromhelicopter.com for instructions to order an original manual and to register for email notification of updates.

FIGURE 5-8. FUEL SHUTOFF VALVE ASSEMBLY

ITEM NUMBER	PART NUMBER	DESCRIPTION	QTY PER ASSY	EFFECTIVITY		
				TH-28	480	480B
29	MS20426AD3-3	. . . Rivet	2		X	
30*	4122049-19	. . . Clip	1		X	
30	4122049-13	. . . Clip (Superseded by 4122049-19)	1		X	
31	NAS1096-2-10	. . . Screw	1		X	
32	4122080-17	. . Screw	4		X	
33	AN960-8l	. . Washer	8		X	
34	4122024-17	. . Tee	1		X	
35	MS29513-020	. . O-Ring	2		X	
36	4122078-1	. . Valve Assembly	1		X	
37	4122082-11	. . Fitting	1		X	
38	23113DH	. . Screw	4		X	
39	4122081-1	. . Plug Valve	1		X	
40	VI-P6T-K2	. . . O-Ring Kit	1		X	
41	5100-68	. . Retaining Ring	1		X	
42	4122087-11	. . Washer	1		X	
43	4122080-11	. . Arm	1		X	
44	MS16562-232	. . Pin	2		X	
45●	4122015-25	. . Swivel	1		X	
45	4122015-19	. . Swivel (Superseded by 4122015-25)	1		X	
46	4122081-3	. . Plug Valve	1		X	
47	VI-P4T-K2	. . . O-Ring Kit	1		X	
48	5100-50	. . Retaining Ring	1		X	
49	4122080-13	. . Socket	1		X	
50	MS16562-222	. . Pin	1		X	
51	MS20823-4D	. . Elbow	1		X	
52	AN814-2DL	. . Plug	1		X	
53	MS29513-010	. . O-Ring	1		X	
54	MS27039-1-08	. Screw	2		X	
55	AN960-10	. Washer	10		X	
56	NAS1068-A3	. Nut Plate	2		X	
57	CCR264SS-3-3	. Rivet	4		X	
58	AN340-8	. Nut	1		X	
59	AN515-8R7	. Screw	1		X	
60	4122083-17	. Coupling	1		X	
61	MS24665-302	. Cotter Pin	2		X	
62	4122083-1	. Extension Assembly	1		X	

UNCONTROLLED COPY WHEN DOWNLOADED OR PRINTED

Visit www.enstromhelicopter.com for instructions to order an original manual and to register for email notification of updates.

FIGURE 5-8. FUEL SHUTOFF VALVE ASSEMBLY

ITEM NUMBER	PART NUMBER	DESCRIPTION	QTY PER ASSY	EFFECTIVITY		
				TH-28	480	480B
63	4122083-19	. Spring	1		X	
64	4122083-3	. Bracket Assembly	1		X	
–	AN931-4-7	. . Grommet	1		X	
–	4122083-21	. . Placard	1		X	
65	AN3-11A	. Bolt	4		X	
66	AN364-1032A	. Nut	4		X	
67	4122026-7	. Fuel Line Assembly	1		X	
–†	4122051-101	. Fuel Shutoff Valve Assembly	1		X	X
–	4122051-9	. Fuel Shutoff Valve Assembly (Superseded by 4122051-101)	1		X	X
68	4122049-5	. . Bracket Assembly Fuel Shutoff Valve	1		X	X
69*	MS21059-08	. . . Nut Plate, Steel Cad Plated	1		X	X
69	NAJ1-82	. . . Nut Plate (Superseded by MS21059-08)	1		X	X
70	MS20426AD3-3	. . . Rivet, Solid, 3/32" X 3/16"	2		X	X
71	4122049-19	. . . Clip Fuel Shutoff Valve	1		X	X
72●	NAS1096-2-8	. . . Screw Hex-Head 8-32 Unc-3a.500	1		X	X
72	NAS1096-2-10	. . . Screw (Superseded by NAS1096-2-8)	1		X	X
–±	ECD093-11	. . . Stop Nut	1		X	X
–±	1/8 X 832	. . . Set Screw	1		X	X
73	4122080-17	. . Screw - Arm Fuel Shutoff Valve	4		X	X
74	NAS1149FN816P	. . Washer: Flat, #8"(.016) Light	8		X	X
74	AN960-8L	. . Washer (Superseded by NAS1149FN816P)	8		X	X
75	4122024-17	. . Fuel Tee Fitting	1		X	X
76	MS29513-020	. . O-Ring, N602-70, 0.864"(.070")	2		X	X
77	4122078-5	. . Valve Body Fuel Shutoff Assembly (Used with 4122051-101)	1		X	X
77†	4122078-3	. . Valve Assembly (Superseded by 4122078 -5)	1		X	X
78	4122082-11	. . Fitting Fuel Shut Off Valve	1		X	X
79†	NAS1352-08H6	. . Cap Screw, Socket Head	4		X	X
79	4122080-19	. . Screw (Superseded by NAS1352-08H6)	4		X	X
80†	4122081-15	. . Plug Valve-Fuel Shutoff Valve (Used with 4122051-101)	1		X	X
80	4122081-5	. . Plug Valve (Superseded by 4122081-15)	1		X	X
80	4122081-1	. . Plug Valve	1		X	X
81	VI-P6T-K2	. . . Seal, Plug, 3/8 Fuel Shutoff Valve	1		X	X
82	5100-68	. . Ring, Snap (Ext), 0.688" (.042")	1		X	X
83	4122087-11	. . Washer Fuel Shutoff Valve	1		X	X

UNCONTROLLED COPY WHEN DOWNLOADED OR PRINTED

Visit www.enstromhelicopter.com for instructions to order an original manual and to register for email notification of updates.

FIGURE 5-8. FUEL SHUTOFF VALVE ASSEMBLY

ITEM NUMBER	PART NUMBER	DESCRIPTION	QTY PER ASSY	EFFECTIVITY		
				TH-28	480	480B
84	4122080-11	. . Arm-Fuel Shutoff Valve	1		X	X
85	MS16562-232	. . Pin, Spring .156 X 1.000 Stainless	1		X	X
86●	4122015-25	. . Swivel Fuel Shutoff	1		X	X
86	4122015-19	. . Swivel Fuel Shutoff (Superseded by 4122015-25)	1		X	X
87	AN340-832	. . Nut	1		X	X
88	MS35206-245	. . Screw: Machine (Ph), 8-32 X 0.500	1		X	X
88	AN515-832R7	. . Screw (Superseded by MS35206-245)	1		X	X
89	MS20823-4D	. . Elbow, 45D, 1/4" MT X 1/8" MP Al	1		X	X
90	MS27039-1-08	. Screw	2		X	X
91	NAS1149F0363P	. Washer, Flat, #10 (0.063")	2		X	X
91	AN960-10	. Washer (Superseded By NAS1149F0363P)	2		X	X
92	NAS1068-A3	. Nut Plate	2		X	X
93	CCR264SS-3-3	. Rivet	4		X	X
94	4122026-7	. Hose Assy: Fuel	1		X	X
–	MS20995C20	. Wire: Safety, 0.020” Diameter	A/R		X	X

* Effectivity S/N 5148 and subsequent.

** Effectivity S/N 5110.

† Effectivity 480B S/N 5143 and subsequent. Retrofittable to 480 S/N 5001-5041, 480B S/N 5042 and subsequent.

± Effectivity S/N 5146 and subsequent.

≡ See Appendix A for equivalent part information.

● Effectivity 480B S/N 5162 and subsequent. Retrofittable to 480 S/N 5001-5041, 480B S/N 5042 and subsequent.

UNCONTROLLED COPY WHEN DOWNLOADED OR PRINTED

Visit www.enstromhelicopter.com for instructions to order an original manual and to register for email notification of updates.

INTENTIONALLY LEFT BLANK

UNCONTROLLED COPY WHEN DOWNLOADED OR PRINTED

Visit www.enstromhelicopter.com for instructions to order an original manual and to register for email notification of updates.

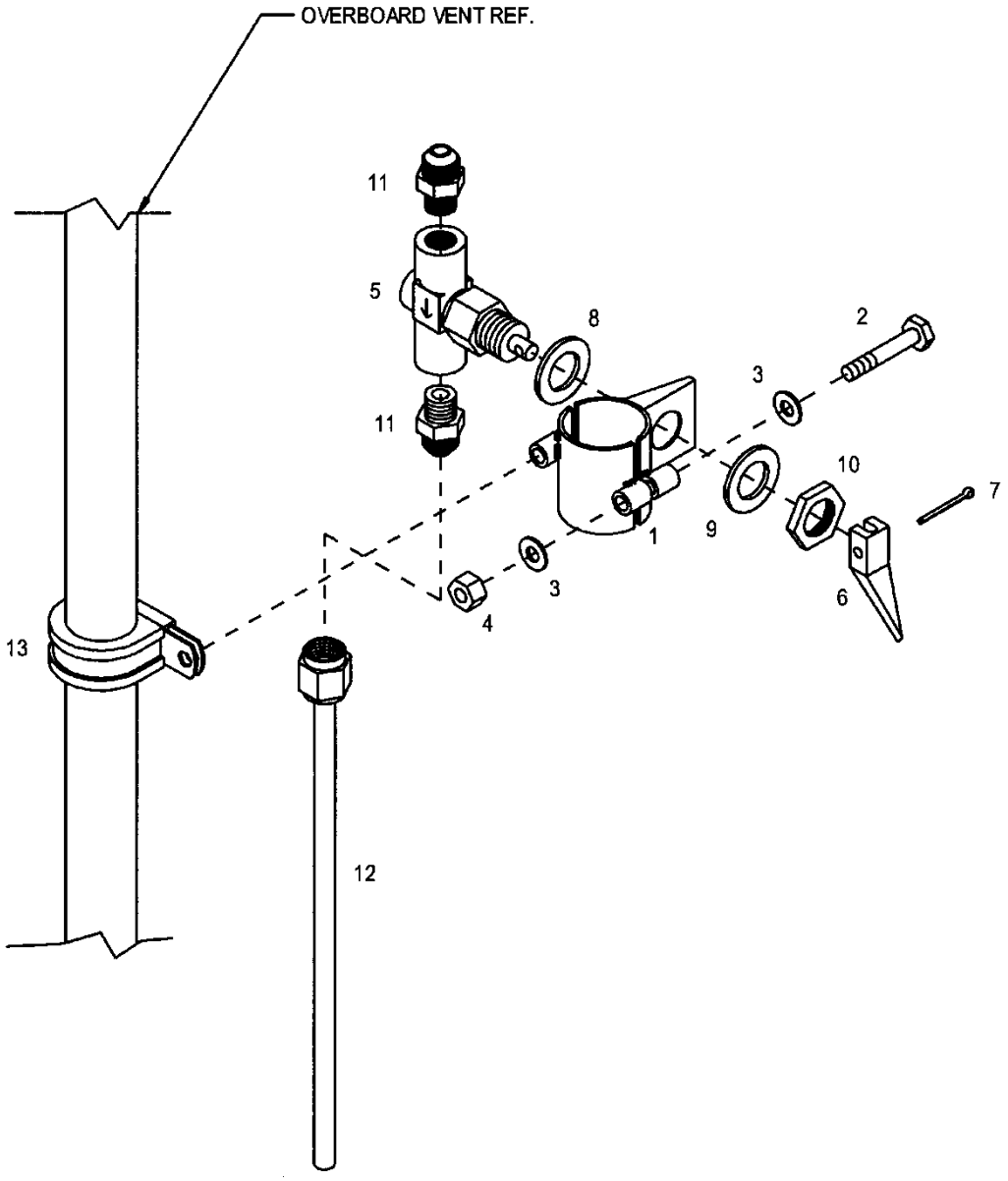

480/480B: S/N 5001-5032, 5039 and subsequent

FIGURE 5-9. SUMP DRAIN VALVE INSTALLATION

UNCONTROLLED COPY WHEN DOWNLOADED OR PRINTED

Visit www.enstromhelicopter.com for instructions to order an original manual and to register for email notification of updates.

FIGURE 5-9. SUMP DRAIN VALVE INSTALLATION

ITEM NUMBER	PART NUMBER	DESCRIPTION	QTY PER ASSY	EFFECTIVITY		
				TH-28	480	480B
1	4122064-3	. Clamp	1	X	X	X
2	AN3-11A	. Bolt	2	X	X	X
2	AN3-10A	. Bolt (Superseded by AN3-11A)	2	X	X	X
3	NAS1149F0363P	. Washer	4	X	X	X
3	AN960-10L	. Washer (Superseded by NAS1149F0363P)	4	X	X	X
4	MS21042-3	. Nut	2	X	X	X
4	AN364-1032A	. Nut (Superseded by MS21042-3)	2	X	X	X
–	28-12460-1	. Valve Drain Assembly	1	X	X	X
5	B-1GF2-B	. . Valve	1	X	X	X
6	NPN	. . . Handle (Included with B-1GF2-B Valve)	1	X	X	X
7*	MS24665-151	. . Cotter Pin	1	X	X	X
7	MS24665-153	. . Cotter Pin (Superseded by MS24665-151)	1	X	X	X
8	NAS1149F0863P	. Washer	1	X	X	X
9	MS35333-44	. Lock Washer	1	X	X	X
10*	AN316-8R	. Nut	1	X	X	X
10	AN316-8	. Nut (Superseded by AN316-8R)	1	X	X	X
11	AN816-4D	. Nipple	2	X	X	X
12**	4122036-7	. Drain Line	1	X	X	X
12	4122036-5	. Drain Line (Superseded by 4122036-7)	1	X	X	X
13	MS21919F14	. Clamp	1	X	X	X

* Effectivity 480/480B S/N 5143 and subsequent. Retrofittable to 480/480B S/N 5001.

** Effectivity 480B S/N 5158 and subsequent. Retrofittable to 480 S/N 5100-5141, 480B S/N 5042 and subsequent.

UNCONTROLLED COPY WHEN DOWNLOADED OR PRINTED

Visit www.enstromhelicopter.com for instructions to order an original manual and to register for email notification of updates.

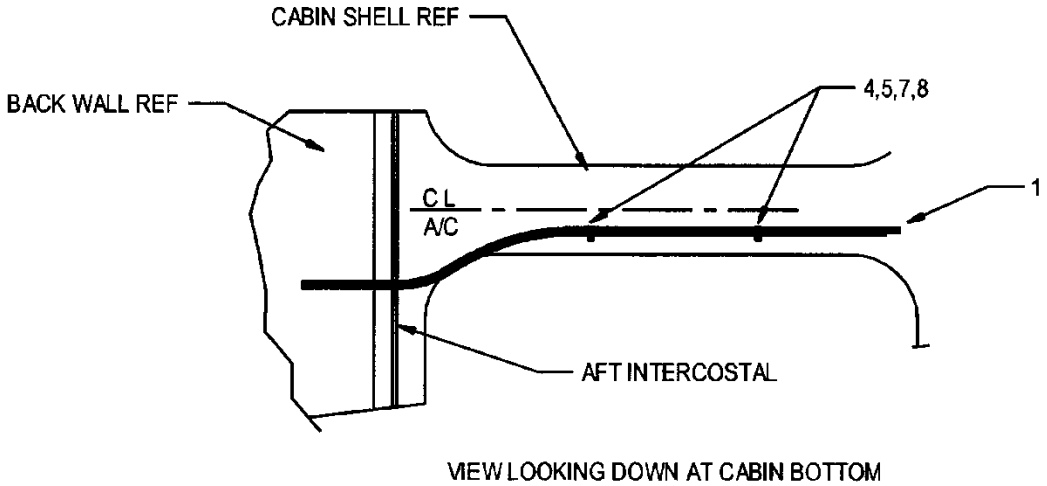

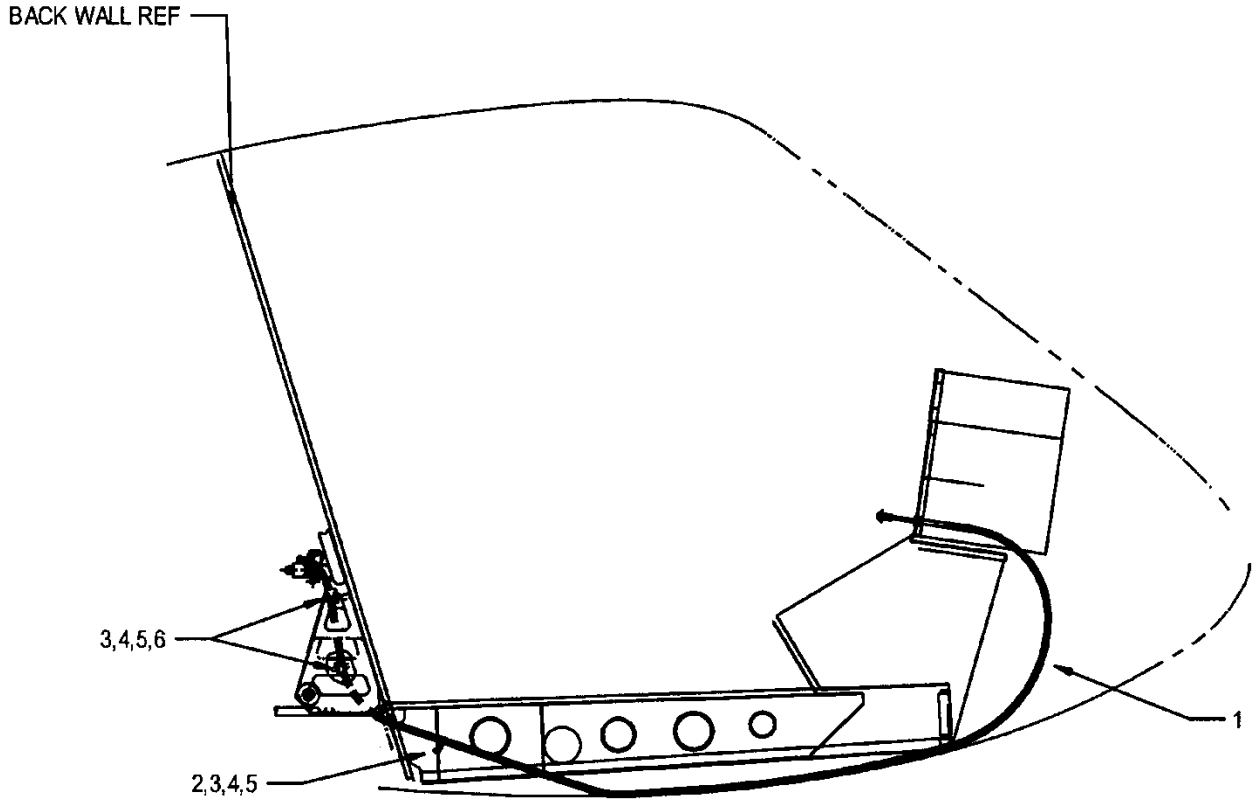

TH-28: All S/N, 480: All S/N
480B: S/N 5001 to 5145

FIGURE 5-10. FUEL SHUTOFF CABLE INSTALLATION S/N 5001 - 5145

UNCONTROLLED COPY WHEN DOWNLOADED OR PRINTED

Visit www.enstromhelicopter.com for instructions to order an original manual and to register for email notification of updates.

FIGURE 5-10. FUEL SHUTOFF CABLE INSTALLATION S/N 5001 - 5145

ITEM NUMBER	PART NUMBER	DESCRIPTION	QTY PER ASSY	EFFECTIVITY		
				TH-28	480	480B
1	A700RD11800	. Cable Assembly	1	X	X	X
2	786-4-CU	. Clamp	1	X	X	X
3	AN515-8R8	. Screw	4	X	X	X
4	AN960-8L	. Washer	12	X	X	X
5	AN364-832A	. Nut	6	X	X	X
6	MS21919WF4	. Clamp	2	X	X	X
7	439SS-4-2-6	. Clip	2	X	X	X
8	AN515-8R10	. Screw	2	X	X	X

UNCONTROLLED COPY WHEN DOWNLOADED OR PRINTED

Visit www.enstromhelicopter.com for instructions to order an original manual and to register for email notification of updates.

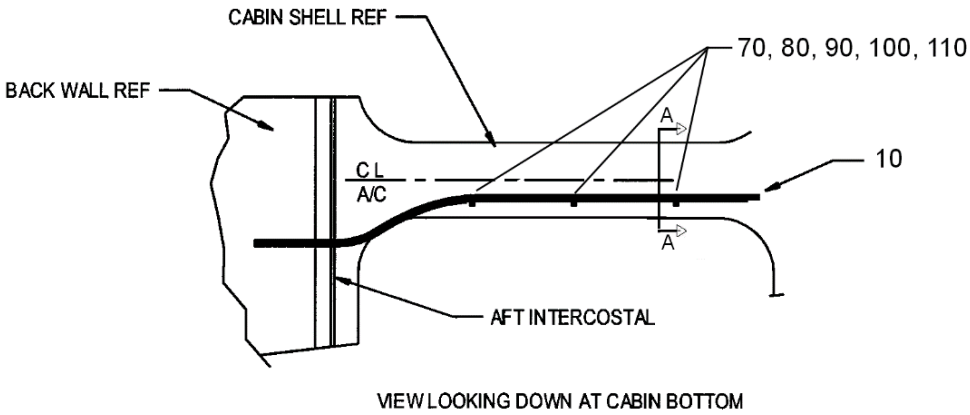

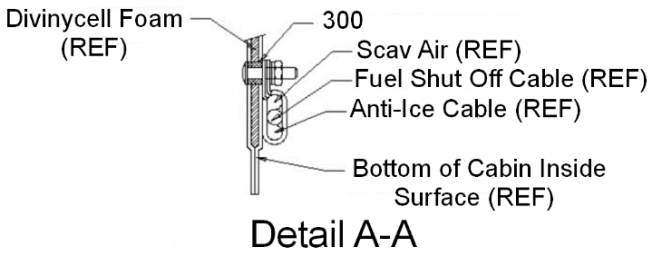

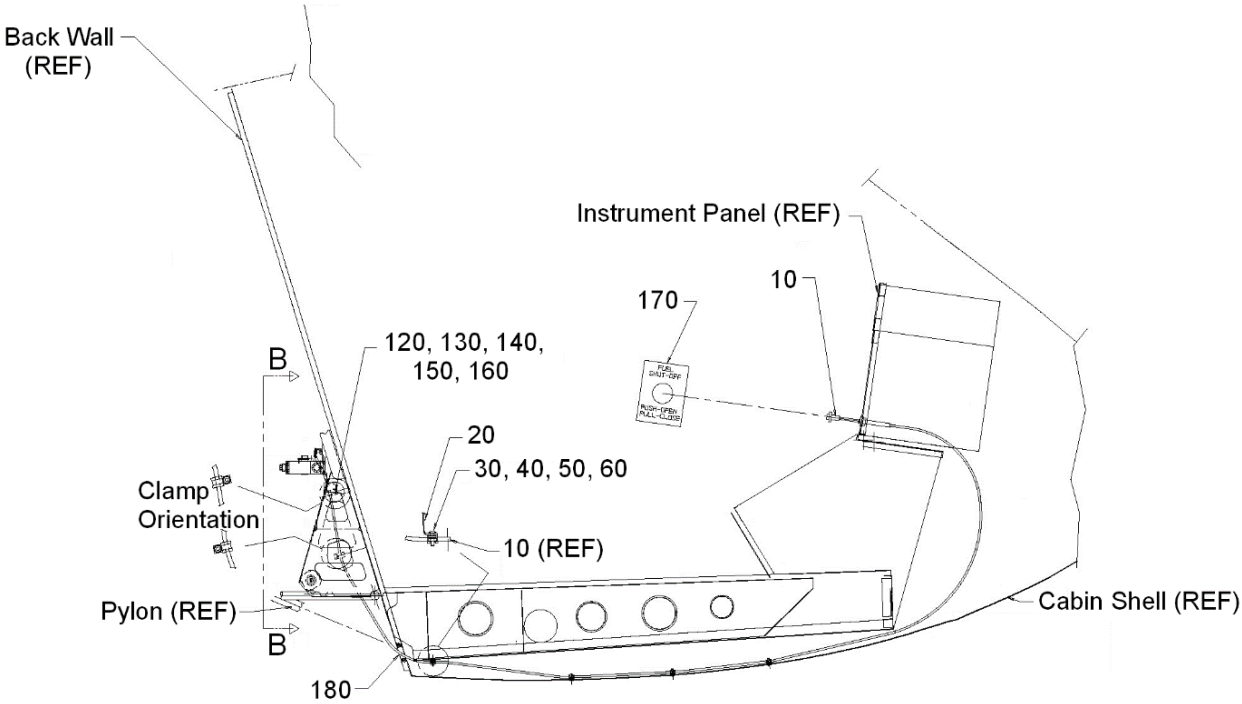

Sheet 1 of 2
480B S/N 5146 and subsequent

FIGURE 5-11. FUEL SHUTOFF CABLE INSTALLATION

UNCONTROLLED COPY WHEN DOWNLOADED OR PRINTED

Visit www.enstromhelicopter.com for instructions to order an original manual and to register for email notification of updates.

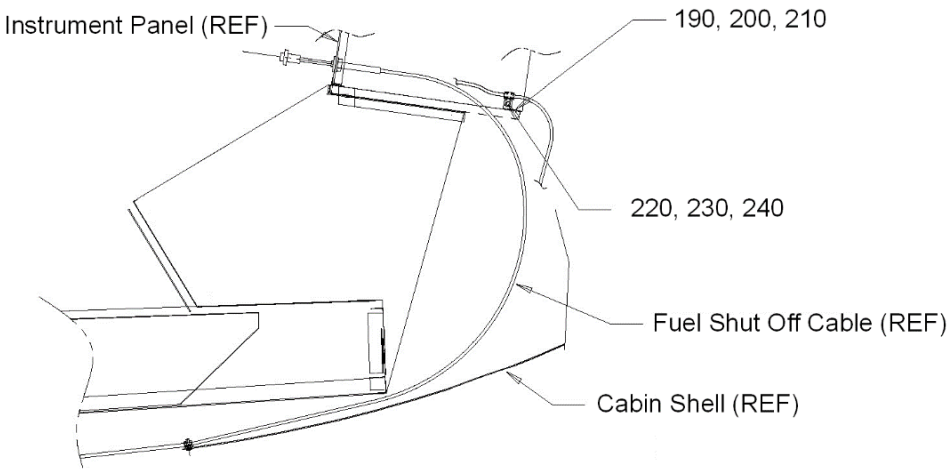

Alternate Cable Routing

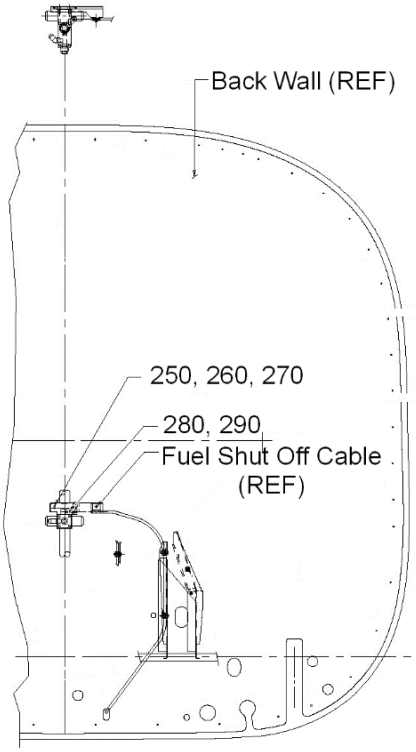

View B-B
View Looking Forward

Sheet 2 of 2

480: All S/N
480B: S/N 5146 and subsequent

FIGURE 5-11. FUEL SHUTOFF CABLE INSTALLATION

UNCONTROLLED COPY WHEN DOWNLOADED OR PRINTED

Visit www.enstromhelicopter.com for instructions to order an original manual and to register for email notification of updates.

FIGURE 5-11. FUEL SHUTOFF CABLE INSTALLATION

ITEM NUMBER	PART NUMBER	DESCRIPTION	QTY PER ASSY	EFFECTIVITY		
				TH-28	480	480B
–	4122050-7	Fuel Shut Off Valve Installation	REF		X	X
10*	A700RD11800	. Cable Assembly, Fuel Shutoff	1		X	X
20	444-4-2-6	. Clamp	1		X	X
30	MS35206-246	. Screw, Machine	1		X	X
40	MS35338-42	. Lock Washer	1		X	X
50	NAS1149FN832P	. Washer	1		X	X
60	MS35649-282	. Nut	1		X	X
70	439SS-4-8-2-6	. Clip	3		X	X
80	AN525-832R10	. Screw	3		X	X
90	MS35338-42	. Lock Washer	3		X	X
100	NAS1149FN832P	. Washer	3		X	X
110	MS35649-282	. Nut	3		X	X
120‡	MS21919WCJ4	. Clamp	2		X	X
120	MS21919F4	. Clamp (Superseded by MS21919 WCJ4)	2		X	X
130	AN515-8R8	. Screw	2		X	X
140	MS35338-42	. Lock Washer	2		X	X
150	NAS1149FN832P	. Washer	2		X	X
160	MS35649-282	. Nut	2		X	X
170●	4119917-11	. Placard	1		X	X
170	4119835-27	. Placard (Superseded by 4119917-11)	1		X	X
180†	CP25WB+	. Caulk	1		X	X
190†	786-4	. Clamp	1		X	X
200†	MS35206-245	. Screw	1		X	X
210†	AN960-8L	. Washer	1		X	X
220†	AN525-8R7	. Screw	1		X	X
230†	AN960-8L	. Washer	1		X	X
240†	AN364-832A	. Nut	1		X	X
250**	4122051-101	. Valve Assembly Fuel Shut Off	1		X	X
260**	MS27039-1-08	. Screw, Machine	2		X	X
270**	AN960-10	. Washer	2		X	X
280**	ECD093-11	. Nut, Stop, Door Cable/Wire	1		X	X
290**	1/8X832	. Screw, Set	1		X	X
300**	EA9359	. Adhesive: Structural	A/R		X	X

* Secure cable to fuel shut off bracket with existing screw.

** Effectivity 480B S/N 5146 and subsequent. Retrofittable to 480 S/N 5001, 480B S/N 5042 and subsequent.

UNCONTROLLED COPY WHEN DOWNLOADED OR PRINTED

Visit www.enstromhelicopter.com for instructions to order an original manual and to register for email notification of updates.

† Use with alternate cable routing when large instrument panel is installed or nonstandard cable routing is required. Effectivity 480B S/N 5155 and subsequent. Retrofittable to 480 S/N 5001, 480B S/N 5042 and subsequent.

‡ Effectivity 480B S/N 5198 and subsequent. Retrofittable to 480 S/N 5001, 480B S/N 5042 and subsequent.

• Effectivity 480B S/N 5190 and subsequent. Retrofittable to 480 S/N 5001, 480B S/N 5042 and subsequent. Does not include 480B S/N 5134, 5147, 5155, 5156, 5158 through 5163, 5173 through 5182, 5193 through 5197, 5200 through 5203, and 5206.

UNCONTROLLED COPY WHEN DOWNLOADED OR PRINTED

Visit www.enstromhelicopter.com for instructions to order an original manual and to register for email notification of updates.

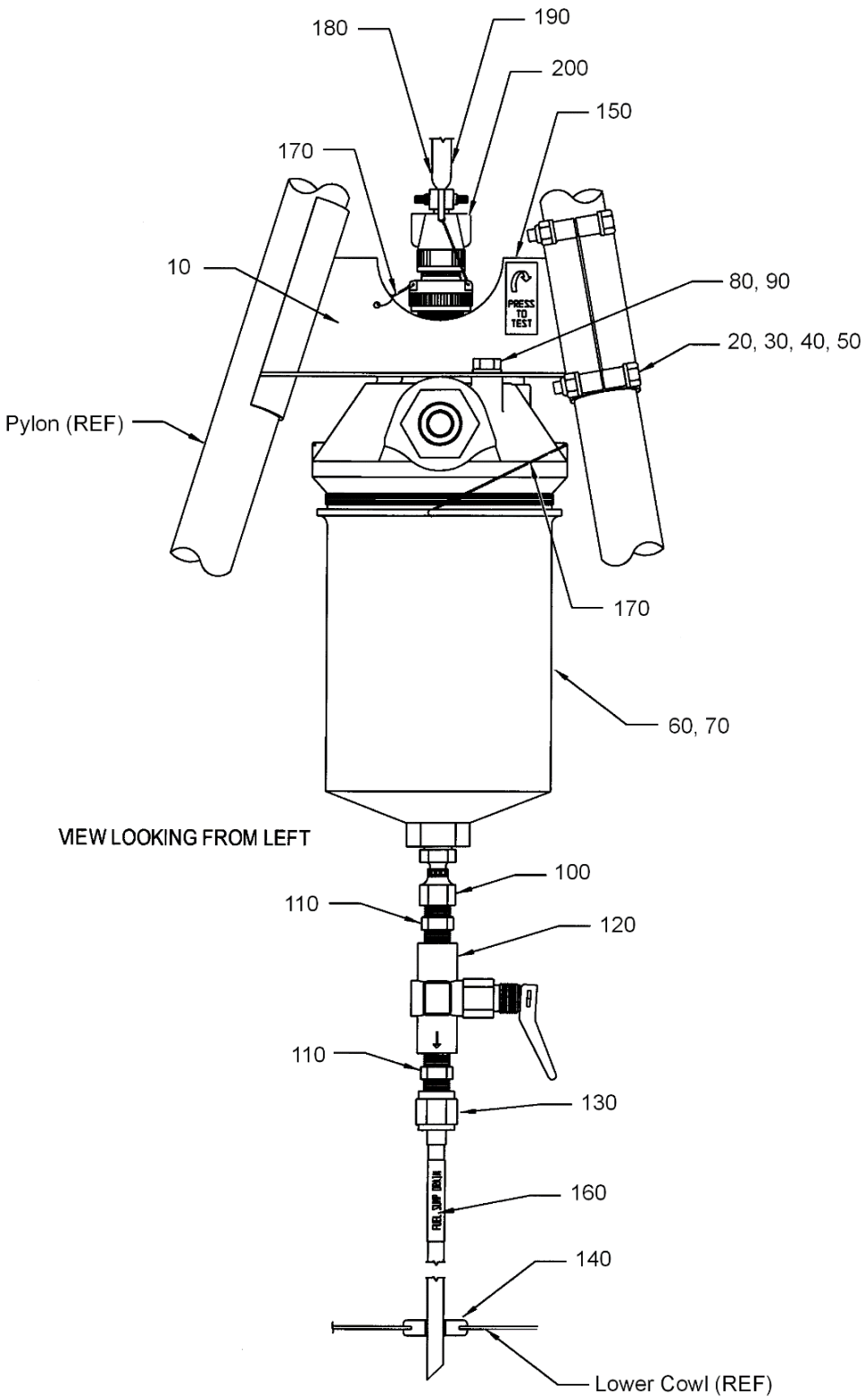

Sheet 1 of 2

FIGURE 5-12. OPTIONAL AIRFRAME MOUNTED FUEL FILTER

UNCONTROLLED COPY WHEN DOWNLOADED OR PRINTED

Visit www.enstromhelicopter.com for instructions to order an original manual and to register for email notification of updates.

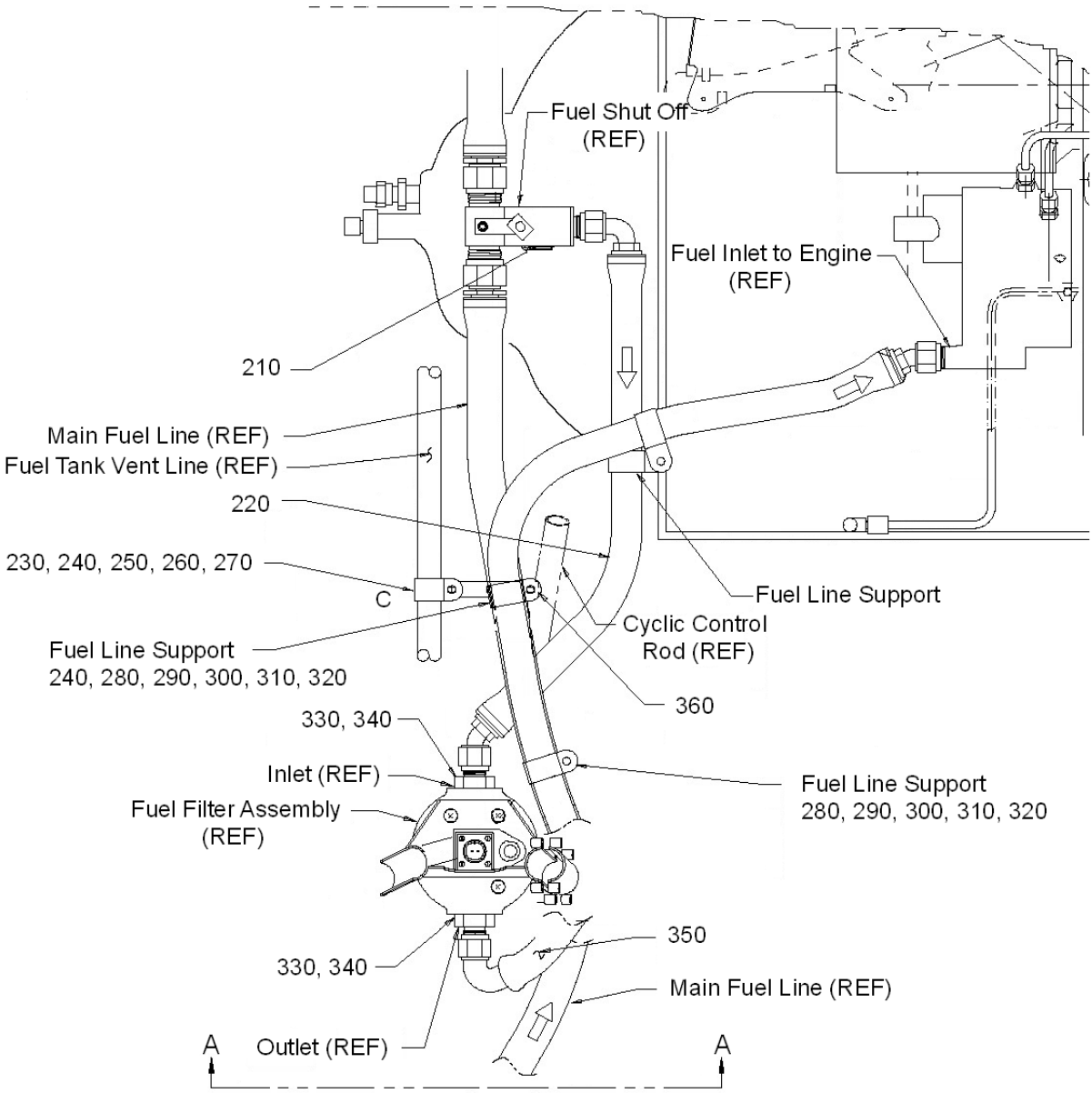

Sheet 2 of 2

FIGURE 5-12. OPTIONAL AIRFRAME MOUNTED FUEL FILTER

UNCONTROLLED COPY WHEN DOWNLOADED OR PRINTED

Visit www.enstromhelicopter.com for instructions to order an original manual and to register for email notification of updates.

FIGURE 5-12. OPTIONAL AIRFRAME MOUNTED FUEL FILTER

ITEM NUMBER	PART NUMBER	DESCRIPTION	QTY PER ASSY	EFFECTIVITY		
				TH-28	480	480B
–	4220035-1	Fuel Filter Install	REF	X	X	X
10	4220039-1	. Bracket, Fuel Filter	1	X	X	X
20	4220039-3	. Clamp Assembly, Fuel Filter	1	X	X	X
30	AN3-11A	. Bolt, Machine	4	X	X	X
40**	NAS1149F0363P	. Washer	4	X	X	X
40	AN960-10	. Washer, Flat (Superseded by NAS1149363P)	4	X	X	X
50**	MS21044N3	. Nut	4	X	X	X
50	AN365-1032A	. Nut, Hex (Superseded by MS21044N3)	4	X	X	X
60	1743640-01	. Filter Assembly: Fuel, Airframe	1	X	X	X
70	1743645-02	. . Element, Filter, Airframe, Fuel	1	X	X	X
–	1743645-01	. . . Filter Element	1	X	X	X
–	034921-01	. . . O-Ring	1	X	X	X
–	1743629-01	. . . Seal	2	X	X	X
80*	AN4-4A	. Bolt, Machine	3	X	X	X
80	AN4-5A	. Bolt, Machine (Superseded by AN4-4A)	3	X	X	X
90*	NAS1149F0463P	. Washer, Flat	3	X	X	X
90	AN960-416	. Washer, Flat (Superseded by NAS1149F0463P)	3	X	X	X
100	4F650X-S	. Adapter, Straight	1	X	X	X
–	MS29512-04	. . O-ring	1	X	X	X
110	AN816-4D	. Nipple	2	X	X	X
120	28-12460-1	. Drain Valve Assembly	1	X	X	X
130*	4122036-7	. Drain Tube Fuel System	1	X	X	X
130	4122036-3	. Drain Line (Superseded by 4122036-7)	1	X	X	X
140	MS35489-10	. Grommet, Rubber	1	X	X	X
150*	4119835-31	. Placard	1	X	X	X
150	4119835-23	. Placard (Superseded by 4119835-31)	1	X	X	X
160	28-12420-15	. Placard Fuel Sump Drain (Removed)	1	X	X	X
170	MS20995C25	. Wire: Safety	A/R	X	X	X
180	MS3420-4	. Bushing, Clamp	1	X	X	X
190	4192509-3	. Caution Warn A/F Filter	1	X	X	X
200	CA3106F12S3SF80	. Plug: Straight, 2-Socket	1	X	X	X
210	MS20913-1	. Plug, Pipe	1	X	X	X
220	4122026-3	. Hose Assy Fuel Filter Airframe	1	X	X	X
230*	S500-12	. Clamp, Cushioned Loop	1	X	X	X
230	MS21919WF-12	. Clamp (Superseded by S500-12)	1	X	X	X
240	MTP5S-E6-C	. Plate, Tie Multiple	1	X	X	X

UNCONTROLLED COPY WHEN DOWNLOADED OR PRINTED

Visit www.enstromhelicopter.com for instructions to order an original manual and to register for email notification of updates.

FIGURE 5-12. OPTIONAL AIRFRAME MOUNTED FUEL FILTER

ITEM NUMBER	PART NUMBER	DESCRIPTION	QTY PER ASSY	EFFECTIVITY		
				TH-28	480	480B
250**	MS35206-246	. Screw	3	X	X	X
250	AN515-8-10	. Screw (Superseded by MS35206-246)	3	X	X	X
260*	MS21042-08	. Nut, Hex	4	X	X	X
260	AN364-832A	. Nut, Hex (Superseded by MS21042-08)	2	X	X	X
270	AN960-8	. Washer, Flat	8	X	X	X
280*	S500-16	. Clamp, Cushioned Loop	2	X	X	X
280	MS21919WF-16	. Clamp (Superseded by S500-16)	2	X	X	X
290*	S500-18	. Clamp, Cushioned Loop	1	X	X	X
290	MS21919WF-18	. Clamp (Superseded by S500-18)	1	X	X	X
300**	MS35206-247	. Screw	1	X	X	X
300	AN515-8-12	. Screw (Superseded by MS35206-247)	1	X	X	X
310	MS21042-08	. Nut, Hex	4	X	X	X
320**	NAS1149FN832P	. Washer	8	X	X	X
320	AN960-8	. Washer, Flat (Superseded by NAS1149FN832P)	8	X	X	X
330†	4129054-43	. Fitting, Line	2	X	X	X
330	4129054-27	. Fitting, Line (Superseded by 4129054-43)	2	X	X	X
340	MS28778-12	. O-Ring	2	X	X	X
350	4122026-5	. Hose Assy Fuel Filter Airframe Fuel Line Assembly	1	X	X	X

* Effectivity 480B S/N 5158 and subsequent. Retrofittable to 480 S/N 5001 - 5041, 480B S/N 5042 and subsequent.

** Effectivity 480B S/N 5212 and subsequent. Retrofittable to 480 S/N 5001 – 5041, 480B S/N 5042 and subsequent.

† Effectivity 480B S/N 5194 and subsequent. Retrofittable to 480 S/N 5001 – 5041, 480B S/N 5042 and subsequent.

UNCONTROLLED COPY WHEN DOWNLOADED OR PRINTED

Visit www.enstromhelicopter.com for instructions to order an original manual and to register for email notification of updates.

INTENTIONALLY LEFT BLANK

UNCONTROLLED COPY WHEN DOWNLOADED OR PRINTED

Visit www.enstromhelicopter.com for instructions to order an original manual and to register for email notification of updates.

SECTION 6

POWER PLANT & RELATED SYSTEMS

UNCONTROLLED COPY WHEN DOWNLOADED OR PRINTED

Visit www.enstromhelicopter.com for instructions to order an original manual and to register for email notification of updates.

INTENTIONALLY LEFT BLANK

UNCONTROLLED COPY WHEN DOWNLOADED OR PRINTED

Visit www.enstromhelicopter.com for instructions to order an original manual and to register for email notification of updates.

SECTION 6 – TABLE OF CONTENTS

	Cover	6-1
	Table of Contents	6-1.2
6-1	Engine Buildup Assembly	6-2
6-1.1	Fire Curtain Installation	6-11.3
6-2	Starter/Generator Cooling Installation	6-12
6-3	Engine Air Induction System	6-14
6-4	Particle Separator/Scav-Air Line Installation	6-18
6-5	Scav-Air/Anti-Ice Control Panel Installation	6-20
6-6	Engine Power Control Installation	6-22
6-7	Engine Idle Stop Assembly	6-26
6-7.1	Engine Idle Stop Assembly – Dual Start Control	6-28
6-7.2	Engine Idle Stop Assembly – Dual Start Control Detail	6-30
6-7.3	Engine Idle Stop Assembly – Dual Start Control Relay Detail	6-32
6-8	Droop Compensator Installation	6-34
6-9	Engine Oil System	6-37
6-10	Oil Cooler Blower Installation	6-42
6-11	Oil Cooler Ducting TH-28 SN 3006, 480 SN 5001-5022	6-46
6-12	Oil Cooler Ducting TH-28 SN 3007, 480 SN 5023 and Subs	6-48
6-13	Eductor Installation	6-52
6-14	Eductor Installation (Obsolete)	6-54

UNCONTROLLED COPY WHEN DOWNLOADED OR PRINTED

Visit www.enstromhelicopter.com for instructions to order an original manual and to register for email notification of updates.

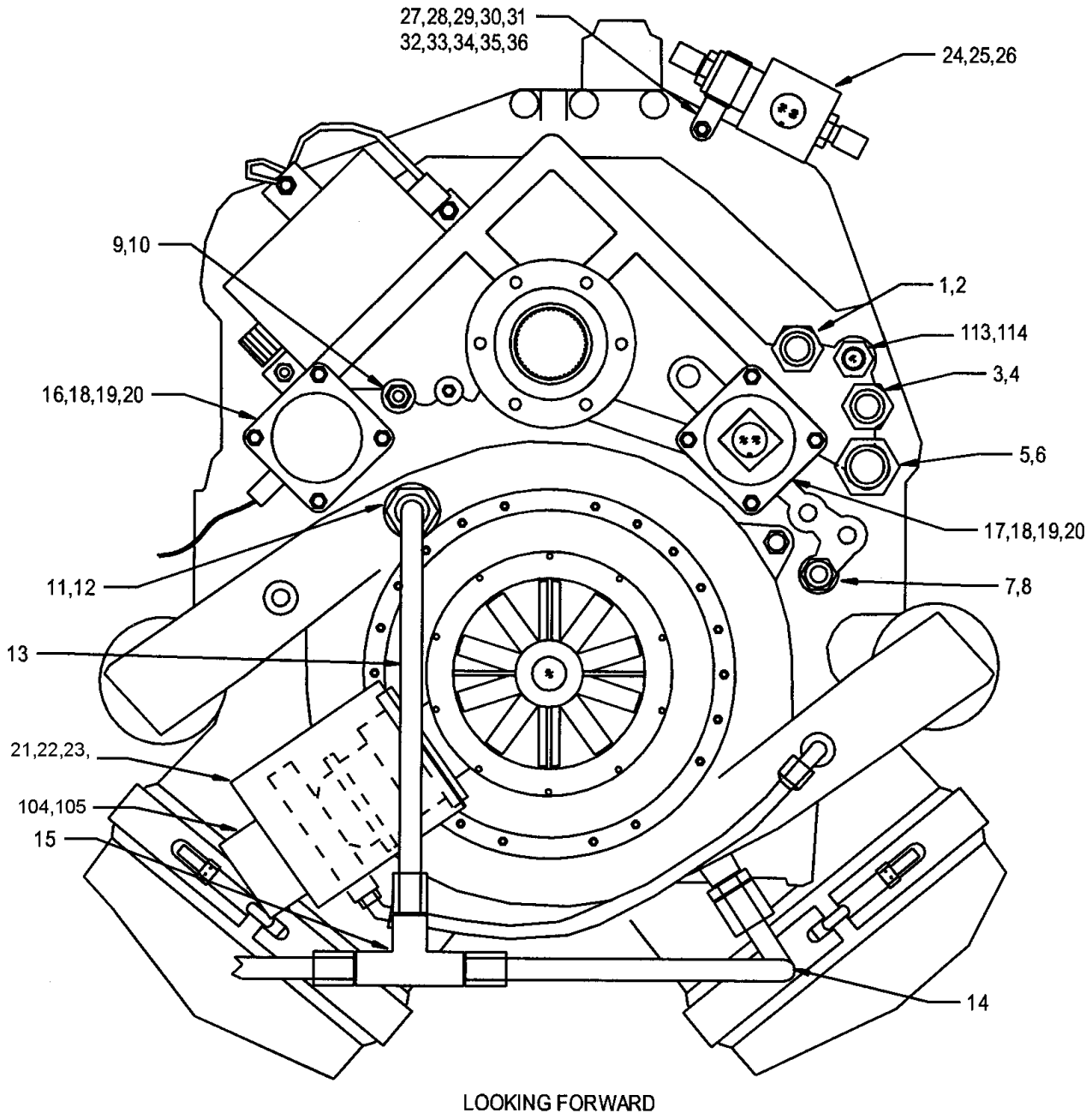

Sheet 1 of 5

FIGURE 6-1. ENGINE BUILDUP ASSEMBLY

UNCONTROLLED COPY WHEN DOWNLOADED OR PRINTED

Visit www.enstromhelicopter.com for instructions to order an original manual and to register for email notification of updates.

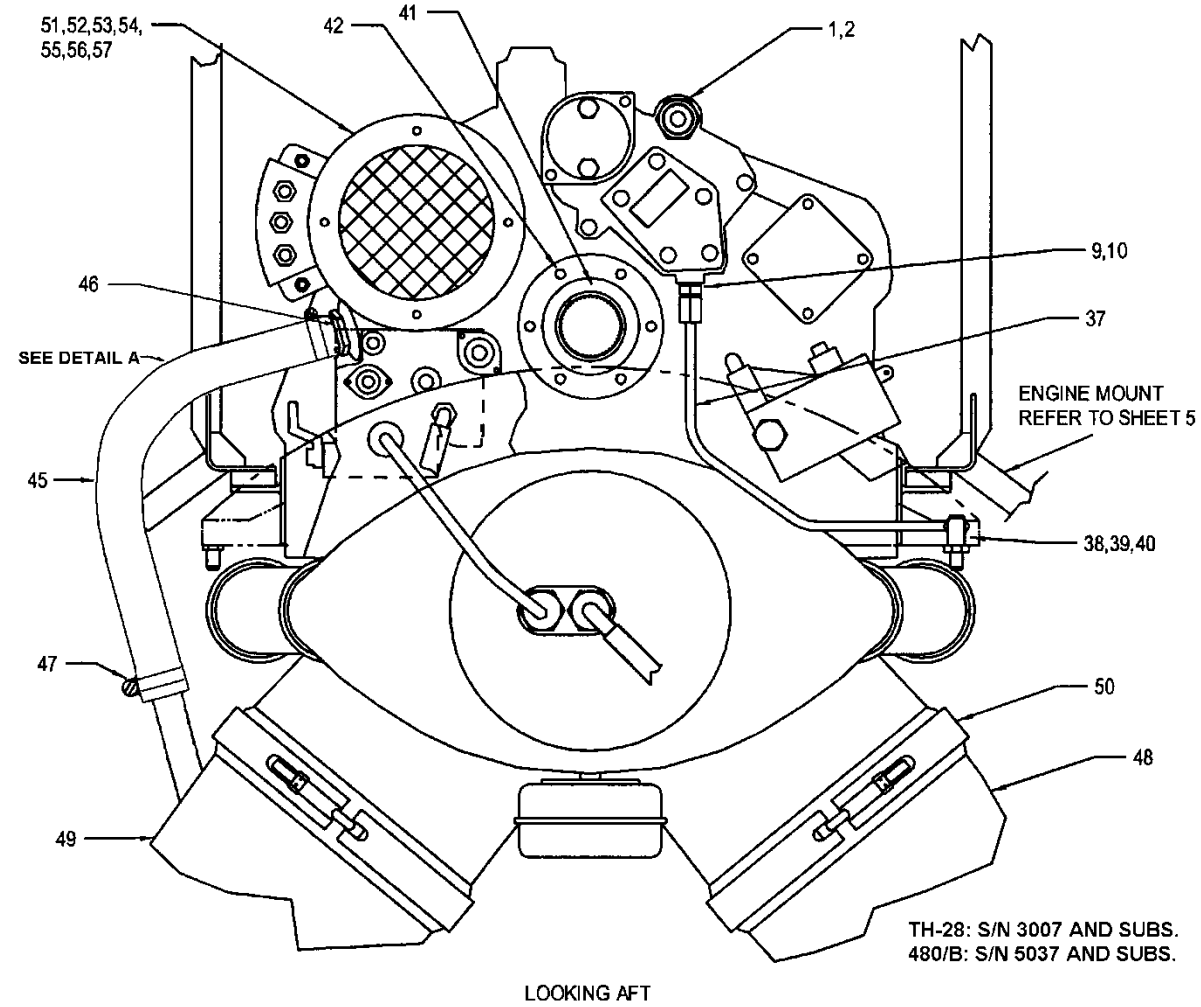

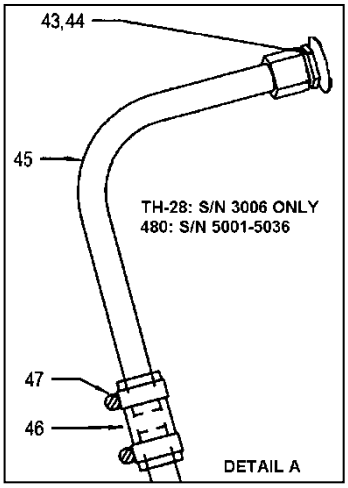

Sheet 2 of 5

FIGURE 6-1. ENGINE BUILDUP ASSEMBLY

UNCONTROLLED COPY WHEN DOWNLOADED OR PRINTED

Visit www.enstromhelicopter.com for instructions to order an original manual and to register for email notification of updates.

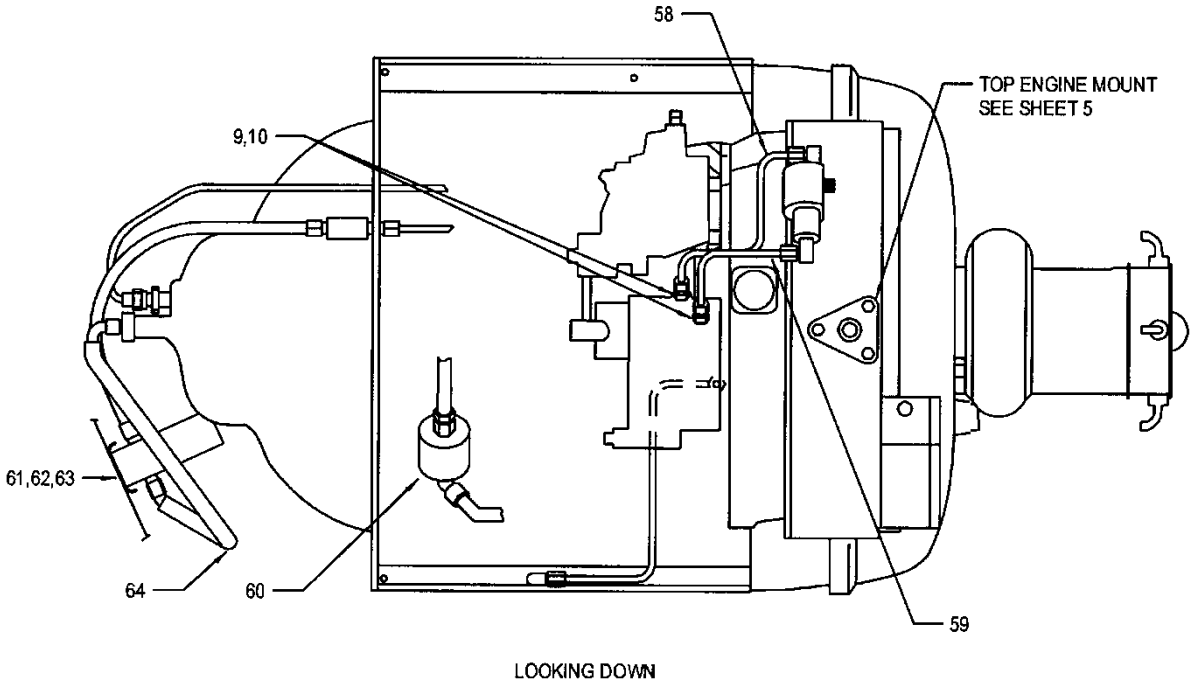

Sheet 3 of 5

FIGURE 6-1. ENGINE BUILDUP ASSEMBLY

UNCONTROLLED COPY WHEN DOWNLOADED OR PRINTED

Visit www.enstromhelicopter.com for instructions to order an original manual and to register for email notification of updates.

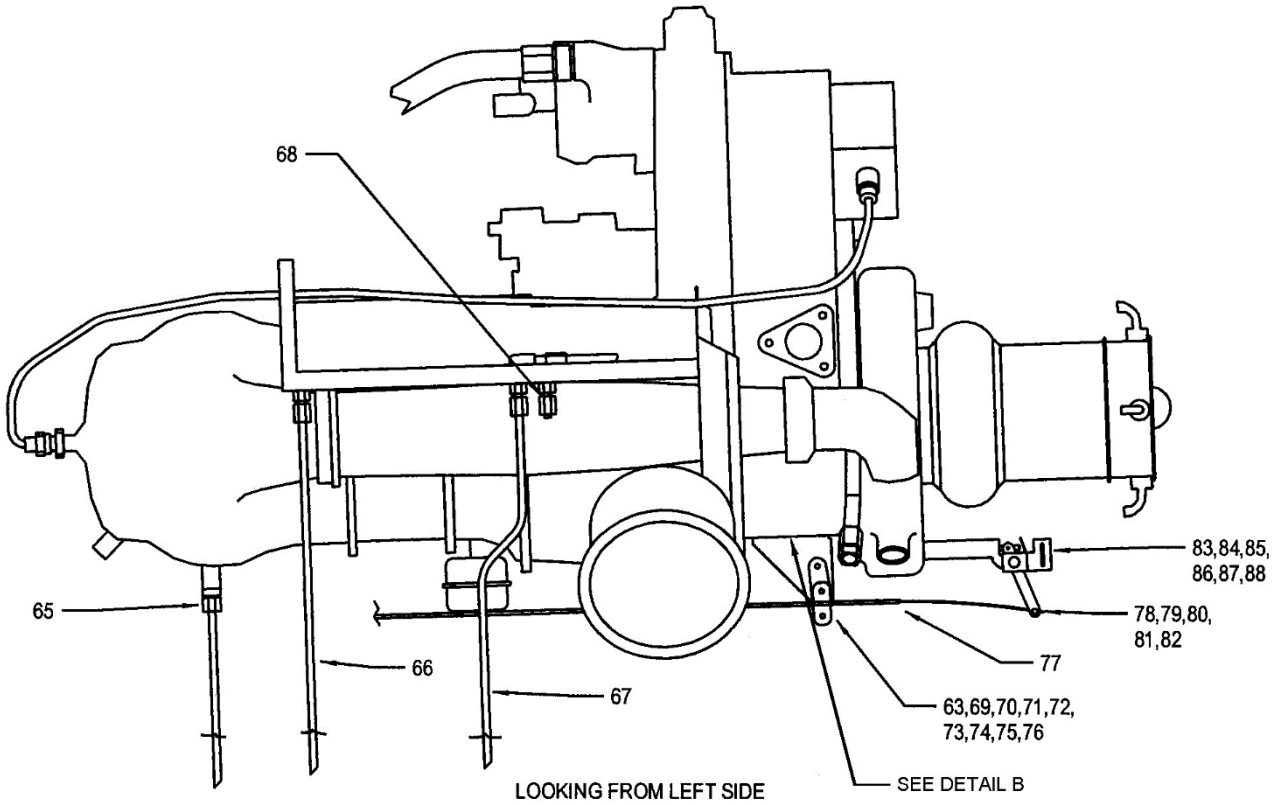

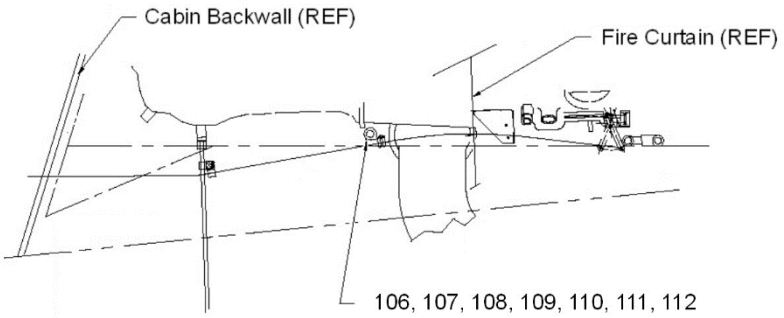

LEFT SIDE LOOKING INBOARD AT ANTI-ICE CABLE ROUTING

Sheet 4 of 5

FIGURE 6-1. ENGINE BUILDUP ASSEMBLY

UNCONTROLLED COPY WHEN DOWNLOADED OR PRINTED

Visit www.enstromhelicopter.com for instructions to order an original manual and to register for email notification of updates.

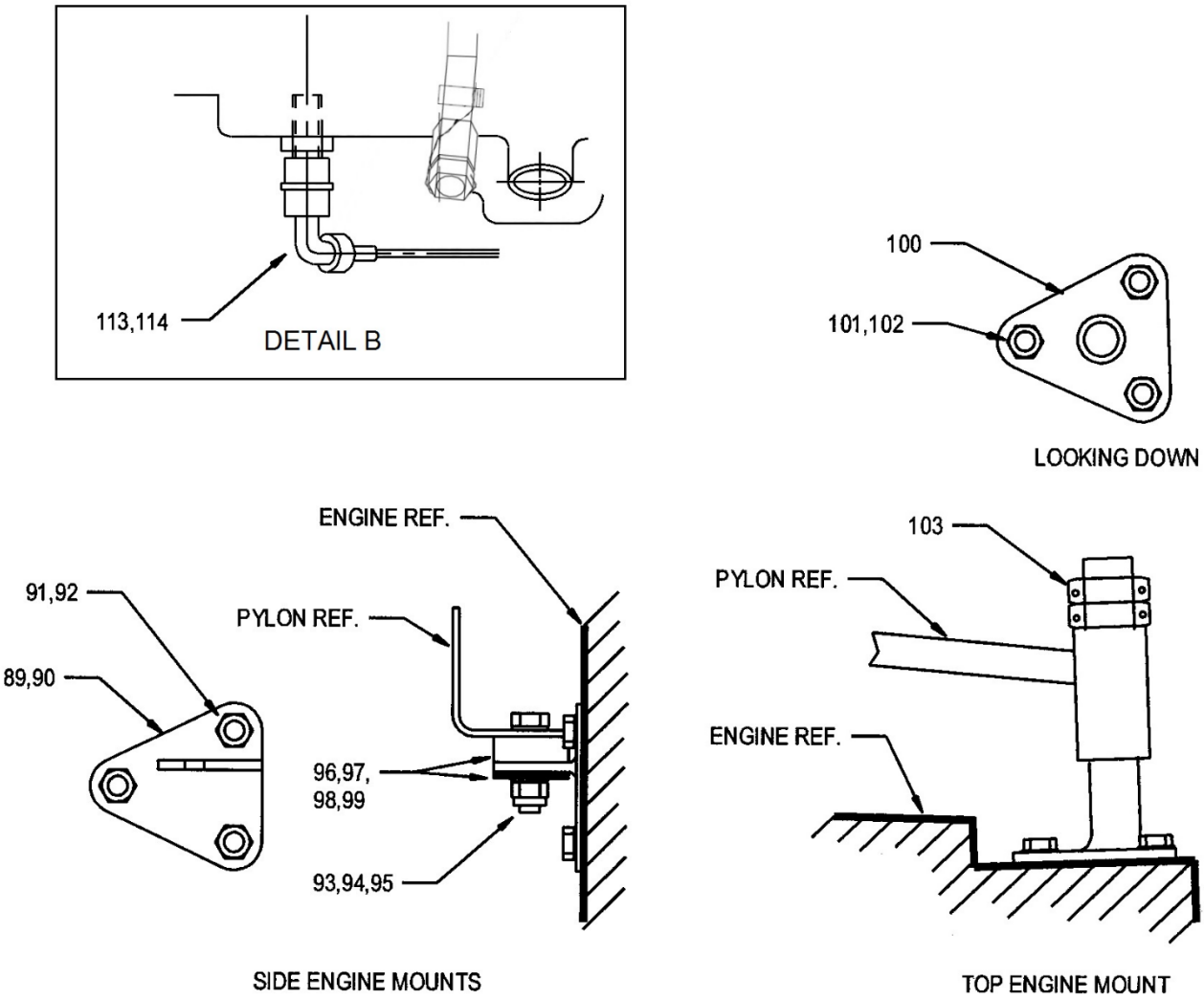

Sheet 5 of 5

FIGURE 6-1. ENGINE BUILDUP ASSEMBLY

UNCONTROLLED COPY WHEN DOWNLOADED OR PRINTED

Visit www.enstromhelicopter.com for instructions to order an original manual and to register for email notification of updates.

FIGURE 6-1. ENGINE BUILDUP ASSEMBLY

ITEM NUMBER	PART NUMBER	DESCRIPTION	QTY PER ASSY	EFFECTIVITY		
				TH-28	480	480B
–	23052351	Engine Assembly, 250-C20W	1	X	X	X
1‡‡	4129054-45	. Fitting Assembly	2	X	X	X
1	4129054-7	. Fitting Assembly (Superseded by 412054-45)	2	X	X	X
2	MS28778-8	. . O-Ring	1	X	X	X
3‡‡	4129054-37	. Fitting Assembly	1	X	X	X
3	4129054-5	. Fitting Assembly (Superseded by 4129054-37)	1	X	X	X
4	MS28778-8	. . O-Ring	1	X	X	X
5‡‡	4129054-39	. Fitting Assembly	1	X	X	X
5	4129054-105	. Fitting Assembly (Superseded by 4129054-39)	1	X	X	X
6	MS28778-10	. . O-Ring	1	X	X	X
7	4F5BX-SS	. Fitting Assembly	1	X	X	X
8	NAS617-5	. . O-Ring	1	X	X	X
9	848-FSO-04-03	. Fitting Assembly	4	X	X	X
9‡‡	4-3 F5OX-SS	. Fitting, Parker Hannifin (Alternate)	4	X	X	X
10	NAS617-3	. . O-Ring	1	X	X	X
11	S-9216EC-1	. Fitting Assembly	2	X	X	X
12	AS3084-08	. . O-Ring	1	X	X	X
12	MS28778-8	. . O-Ring (Alternate)	1	X	X	X
13	4120517-11	. Line Assembly	1	X	X	X
14	E9000-10	. Line Assembly	1	X	X	X
14	4120517-13	. Line Assembly (Alternate)	1	X	X	X
–	MS51521B8S	. Swivel Nut Elbow (Used with 4120517-13)	1	X	X	X
15	4129518-1	. Coupling	1	X	X	X
16*	0402-005	. Signal Generator, N_2	1	X	X	
16**	32005-023	. Tachometer Generator, N_2	1	X	X	X
17	32005-023	. Tachometer Generator, N_1	1	X	X	X
18	AS3491-01	. Gasket	2	X	X	X
19	MS21043-4	. Nut	8	X	X	X
20‡‡	NAS1149F0432P	. Washer	8	X	X	X
20	AN960-416L	. Washer (Superseded by NAS1149F0432P)	8	X	X	X
21	4120021-1	. Bleed Air Dump	1	X	X	X
22	PK 86XZ-8-8	. Screw	4	X	X	X
23	23054604	. Gasket	2	X	X	X
24	SPDD2315	. Fuel Pressure Switch	1	X	X	X

UNCONTROLLED COPY WHEN DOWNLOADED OR PRINTED

Visit www.enstromhelicopter.com for instructions to order an original manual and to register for email notification of updates.

FIGURE 6-1. ENGINE BUILDUP ASSEMBLY

ITEM NUMBER	PART NUMBER	DESCRIPTION	QTY PER ASSY	EFFECTIVITY		
				TH-28	480	480B
25	849-FSO-04X04	. Fitting Assembly	2	X	X	X
25‡‡	4 C5OX-S	. Fitting, Parker Hannifin (Alternate)	2	X	X	X
26	MS29512-4	. . O-Ring	1	X	X	X
27	MS21919WF16	. Clamp	1	X	X	X
28	MS9101-03	. Clip	1	X	X	X
29	AN515-8R12	. Screw	1	X	X	X
30	28-16476-2	. Spacer	1	X	X	X
31	AN340-832	. Nut	1	X	X	X
32	AN935-8	. Lock Washer	1	X	X	X
33	AN960-8L	. Washer	2	X	X	X
34	4122043-11	. Stand-off/Stud	1	X	X	X
35	MS21042-3	. Nut	1	X	X	X
36‡‡	NAS1149F0363P	. Washer	1	X	X	X
36	AN960-10	. Washer (Superseded by NAS1149F0363P)	1	X	X	X
37	4122042-5	. Line Assembly	1	X	X	X
38	AN833-4	. Elbow	1	X	X	X
39	AN960-816	. Washer	1	X	X	X
40	AN924-4	. Nut	1	X	X	X
41	23063426	. Seal, Double Lip	2	X	X	X
42	4120046-11	. Stud (Standard)	6	X	X	X
42	4120046-13	. Stud (.003 oversize)	6	X	X	X
42	4120046-15	. Stud (.006 oversize)	6	X	X	X
42	4120046-17	. Stud (.009 oversize)	6	X	X	X
43‡‡	4129054-41	. Fitting Assembly	1	X	X	
43‡	4129054-13	. Fitting Assembly (Superseded by 4129054-41)	1	X	X	
43‡Θ	4129054-3	. Fitting Assembly (Superseded by 4129054-13)	1	X	X	
44‡Θ	MS28778-12	. . O-Ring (Used with 4129054-3)	1	X	X	
45	4120032-13	. Vent Hose	1	X	X	X
45‡	4120031-1	. Line Assembly (Superseded by 4120032-13)	1	X	X	
46	4604-12-12-0	. Fitting	1	X	X	X
46‡	4120032-11	. Hose Adapter	1	X	X	
47►	NAS1922-100-3	. Clamp	2	X	X	X
47	20012S	. Clamp (Superseded by NAS1922-100-3)	2	X	X	X
48▲	4120016-7	. Exhaust Stack, L/H (Alternate)	1	X	X	X
48††	4120016-5	. Exhaust Stack, L/H	1	X	X	X

UNCONTROLLED COPY WHEN DOWNLOADED OR PRINTED

Visit www.enstromhelicopter.com for instructions to order an original manual and to register for email notification of updates.

FIGURE 6-1. ENGINE BUILDUP ASSEMBLY

ITEM NUMBER	PART NUMBER	DESCRIPTION	QTY PER ASSY	EFFECTIVITY		
				TH-28	480	480B
48	4120016-3	. Exhaust Stack, L/H (Superseded by 4120016-5)	1	X	X	X
49 ▲	4120016-8	. Exhaust Stack, R/H (Alternate)	1	X	X	X
49††	4120016-6	. Exhaust Stack, R/H	1	X	X	X
49	4120016-4	. Exhaust Stack, R/H (Superseded by 4120016-6)	1	X	X	X
50	VC1019	. Exhaust Clamp	2	X	X	X
–	Z1200J-02	. . Nut	1	X	X	X
50	4133-0044	. Exhaust Clamp (Alternate)	2	X	X	X
51●●	150SG117Q-4-1	. Starter/Generator with Quad Mounting Kit	1		X	X
51●●	150SG117Q-4	. . Starter/Generator	1		X	X
–	150SG1009-5	. . . Brushes	4		X	X
52●	150SG1108	. . Clamp (Part of Quad Mounting Kit)	1			X
53●	150SG1040	. . Mounting Flange (Part of Quad Mounting Kit)	1			X
54	AS3209-113	. O-Ring	1	X	X	X
51●	150SG117Q-3-1	. Starter/Generator with Quad Mounting Kit	1		X	X
51●	150SG117Q-3	. . Starter/Generator	1		X	X
–	150SG1009-5	. . . Brushes	4		X	X
52●	150SG1108	. . Clamp (Part of Quad Mounting Kit)	1			X
53●	150SG1040	. . Mounting Flange (Part of Quad Mounting Kit)	1			X
54	AS3209-113	. O-Ring	1	X	X	X
51	524-080	. Starter/Generator	1	X	X	X
–	408764B	. . Brushes	4	X	X	X
52	323101A575ZB	. Clamp (Used with 4120011-11)	1	X	X	X
52	409140	. Band and Clamp Set (Used with 603864)	1	X	X	X
53	603864	. Mounting Bracket	1	X	X	X
53	4120011-11	. Mounting Bracket	1	X	X	X
54	AS3209-113	. O-Ring	1	X	X	X
55►	AS3492-01	. Gasket	1	X	X	X
55	MS9135-01	. Gasket (No Longer Available)	1	X	X	X
56	AN960C516	. Washer	4	X	X	X
57	MS20500-524	. Nut	4	X	X	X
58††	4122042-101	. Line Assembly	1	X	X	X
58	4122042-3	. Line Assembly (Superseded by 4122042-101)	1	X	X	X

UNCONTROLLED COPY WHEN DOWNLOADED OR PRINTED

Visit www.enstromhelicopter.com for instructions to order an original manual and to register for email notification of updates.

FIGURE 6-1. ENGINE BUILDUP ASSEMBLY

ITEM NUMBER	PART NUMBER	DESCRIPTION	QTY PER ASSY	EFFECTIVITY		
				TH-28	480	480B
59††	4122042-9	. Line Assembly	1	X	X	X
59	4122042-1	. Line Assembly (Superseded by 4122042-9)	1	X	X	X
60	23064565	. Accumulator Kit	1	X	X	X
61†	90120075	. Flow, Fuel, Miniflo	1	X	X	X
62†	4122040-11	. Bracket	1	X	X	X
63	MS35207-245	. Screw	11	X	X	X
64†	124F003-4CR0210	. Fuel Line	1	X	X	X
65	4120034-1	. Line Assembly	1	X	X	X
66	4120033-1	. Line Assembly	2	X	X	X
67	4120033-3	. Line Assembly	1	X	X	X
68	AN929A4J	. Cap Assembly	2	X	X	X
69	4120029-11	. Insert	1	X	X	X
70	4120029-13	. Insert	1	X	X	X
71	4120028-1	. Support Bracket	1	X	X	X
72	4120035-11	. Bracket	1	X	X	X
73	28-12400-23	. Clamp	1	X	X	X
74‡‡	MS35338-42	. Lock Washer	2	X	X	X
74	AN935-8	. Lock Washer (Superseded by MS3533-42)	2	X	X	X
75‡‡	NAS1149FN832P	. Washer	6	X	X	X
75	AN960-8	. Washer (Superseded by NAS1149FN832P)	6	X	X	X
76	AN364-832A	. Nut	1	X	X	X
77	4129560-9	. Cable Assembly	1	X	X	X
78	4122015-15	. Screw	1	X	X	X
79‡‡	MS21083N3	. Nut	1	X	X	X
79	AN364-1032A	. Nut (Superseded by MS21083N3)	1	X	X	X
80‡‡	NAS1149C0332R	. Washer	A/R	X	X	X
80	AN960C10L	. Washer (Superseded by NAS1149C0332R)	A/R	X	X	X
81‡‡	MS35206-245	. Screw	1	X	X	X
81	AN515-8R8	. Screw (Superseded by MS35206-245)	1	X	X	X
82♦	MS35649-282	. Nut	1	X	X	X
82‡‡	MS21042-08	. Nut (Superseded by MS35649-282)	1	X	X	X
82	AN340-8	. Nut (Superseded by MS21042-08)	1	X	X	X
83	4120022-13	. Bracket	1	X	X	X
84	MS20392-2C31	. Pin	1	X	X	X
85‡‡	NAS1149F0363P	. Washer	1	X	X	X
85	AN960-10	. Washer (Superseded by NAS1149F0363P)	1	X	X	X

UNCONTROLLED COPY WHEN DOWNLOADED OR PRINTED

Visit www.enstromhelicopter.com for instructions to order an original manual and to register for email notification of updates.

FIGURE 6-1. ENGINE BUILDUP ASSEMBLY

ITEM NUMBER	PART NUMBER	DESCRIPTION	QTY PER ASSY	EFFECTIVITY		
				TH-28	480	480B
86	AN381-2-8	. Cotter Pin	1	X	X	X
86	MS24665-151	. Cotter Pin (Alternate)	1	X	X	X
87	1SE1	. Switch, Miniature	1	X	X	X
88	JE-1	. Actuator	1	X	X	X
–	1-480319-0	. Housing	1	X	X	X
–	60618-1	. Contact	1	X	X	X
89	4120012-21	. Engine Mount, L/H	1	X	X	X
90	4120012-22	. Engine Mount, R/H	1	X	X	X
91	ECD4080-11	. Bolt	6	X	X	X
92‡‡	NAS1149F0532P	. Washer	6	X	X	X
92	AN960-516L	. Washer (Superseded by NAS1149F0532P)	6	X	X	X
93	AN5-13A	. Bolt	2	X	X	X
94‡‡	NAS1149F0563P	. Washer	A/R	X	X	X
94	AN960-516	. Washer (Superseded by NAS1149F0563P)	A/R	X	X	X
94‡‡	NAS1149F0532P	. Washer	A/R	X	X	X
94	AN960-516L	. Washer (Superseded by NAS1149F0532P)	A/R	X	X	X
95	MS20500-524	. Nut	2	X	X	X
96	4120012-13	. Spacer, .400"	A/R	X	X	X
97	4120012-15	. Spacer, .050"	A/R	X	X	X
98	4120012-17	. Spacer, .025"	A/R	X	X	X
99	4120012-19	. Spacer, .150"	A/R	X	X	X
100◊	4120013-21	. Engine Mount, Top	1	X	X	X
101	NAS6205-4H	. Bolt	3	X	X	X
102‡‡	NAS1149F0563P	. Washer	3	X	X	X
102	AN960-516	. Washer (Superseded by NAS1149F0563P)	3	X	X	X
103	NAS509-12	. Nut	2	X	X	X
104	FLX200120003208	. Duct, 8.00”	1	X	X	X
105	20044S	. . Hose Clamp	2	X	X	X
106	S500-8	. Clamp: Cushioned	1		X	X
107	S500-3	. Clamp: Cushioned	2		X	X
108‡‡	MS35206-245	. Screw	1		X	X
108▶	AN515-8R8	. Screw, Machine (Superseded by MS35206-245)	1		X	X
109‡‡	MS21042-08	. Nut	1		X	X

UNCONTROLLED COPY WHEN DOWNLOADED OR PRINTED

Visit www.enstromhelicopter.com for instructions to order an original manual and to register for email notification of updates.

FIGURE 6-1. ENGINE BUILDUP ASSEMBLY

ITEM NUMBER	PART NUMBER	DESCRIPTION	QTY PER ASSY	EFFECTIVITY		
				TH-28	480	480B
109▶	AN340-8	. Nut, Hex (Superseded by MS21042-08)	1		X	X
110‡‡	NAS1149FN832P	. Washer	1		X	X
110▶	AN960-8	. Washer, Flat (Superseded by NAS1149FN832P)	1		X	X
111▶	AN935-8	. Lock Washer (Superseded by MS21042-08)	1		X	X
112▶	608036-1	. Tape: Silicon Fusion Hi-Temp	A/R		X	X
113 Δ	CA3106E8S1SF80F42	. Connector	2		X	X
114 Δ	370BA002B0203AN	. Backshell, 90°	2		X	X

*	Used with Dual Indicator (N_2/N_R), P/N 56004-003.
**	Used with Dual Indicator (N_2/N_R), P/N ECD4053-3,-4, and -5.
†	Optional equipment.
‡	Effectivity TH-28, S/N 3006 only; 480, S/N 5001-5036.
●	Effectivity 480B, S/N 5077, 5085 and subsequent.
●●	Effectivity 480B, S/N 5114 and subsequent and all 480B equipped with Increased Cooling Kit, P/N 4230031.
Θ	Effectivity 480B, S/N 5143 and subsequent.
▶	Effectivity 480B S/N 5155 and subsequent. Retrofittable to 480 S/N 5001 - 5041, 480B S/N 5042 and subsequent.
††	Effectivity 480B S/N 5158 and subsequent. Retrofittable to 480 S/N 5001 - 5041, 480B S/N 5042 and subsequent.
‡‡	Effectivity 480B S/N 5194 and subsequent. Retrofittable to 480 S/N 5001 – 5041, 480B S/N 5042 and subsequent.
♦	Effectivity 480B S/N 5218 and subsequent. Retrofittable to 480B S/N 5042 and subsequent.
◊	Reference: Upper engine mount pylon bushing is P/N 12-DU-16.
Δ	Part of P/N 4192514-902/-903 wiring harness.
▲	Effectivity 480B, S/N 5252 and subsequent. Retrofittable to 480 S/N 5001 - 5041, 480B S/N 5042 and subsequent.

UNCONTROLLED COPY WHEN DOWNLOADED OR PRINTED

Visit www.enstromhelicopter.com for instructions to order an original manual and to register for email notification of updates.

INTENTIONALLY LEFT BLANK

UNCONTROLLED COPY WHEN DOWNLOADED OR PRINTED

Visit www.enstromhelicopter.com for instructions to order an original manual and to register for email notification of updates.

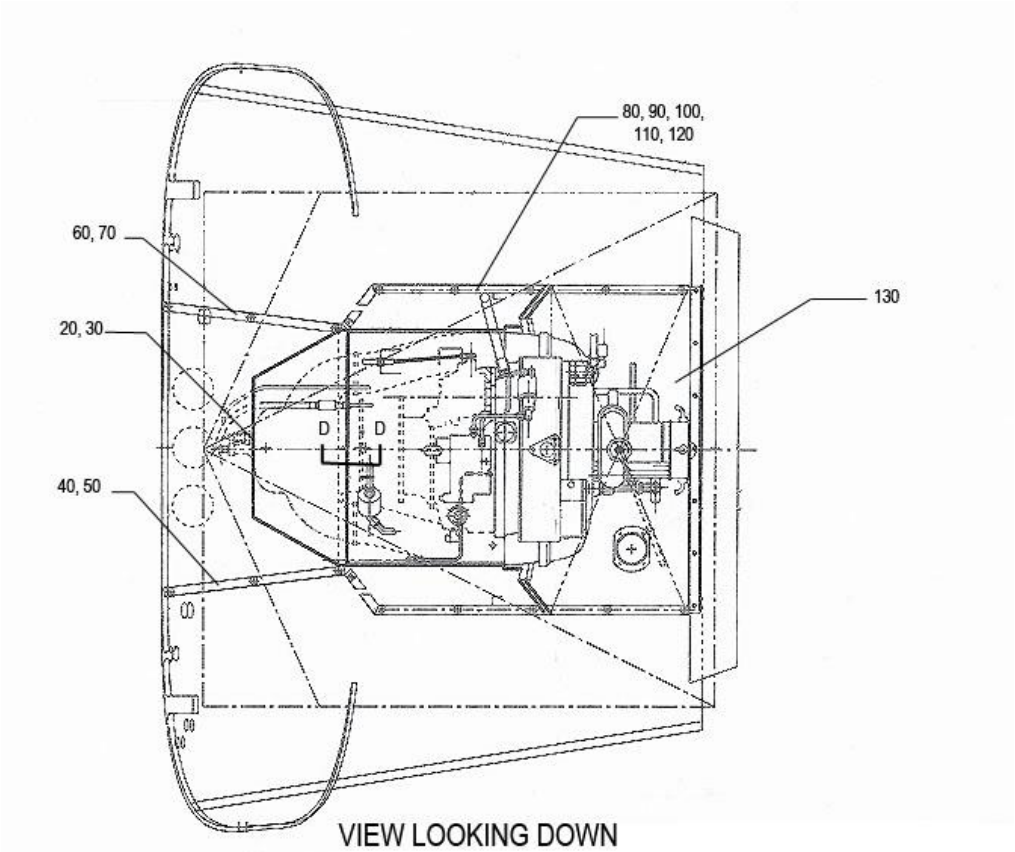

VIEW LOOKING DOWN

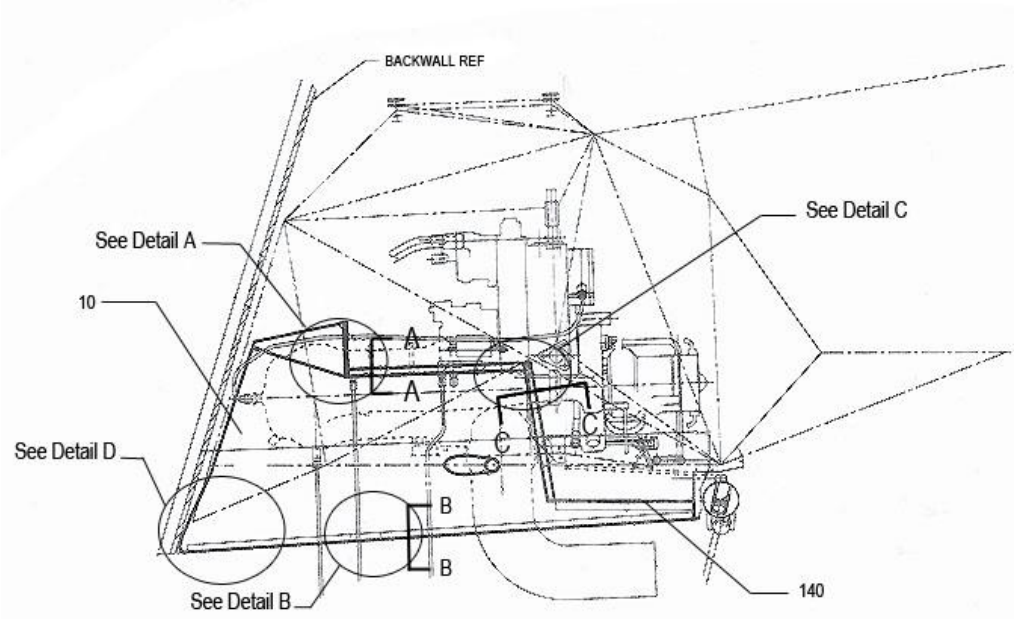

VIEW LOOKING FROM LEFT

Sheet 1 of 3

FIGURE 6-1.1 FIRE CURTAIN INSTALLATION

UNCONTROLLED COPY WHEN DOWNLOADED OR PRINTED

Visit www.enstromhelicopter.com for instructions to order an original manual and to register for email notification of updates.

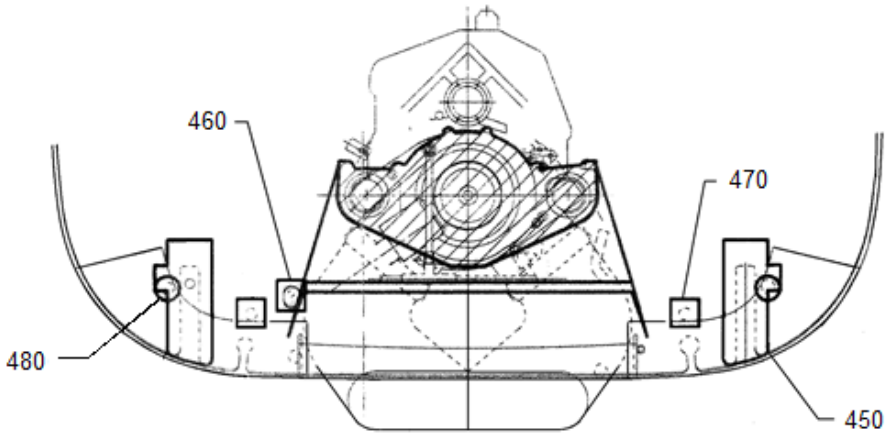

VIEW LOOKING FORWARD

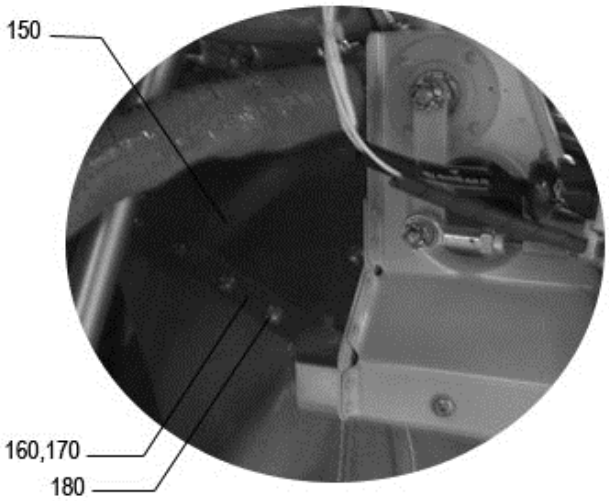

Detail A

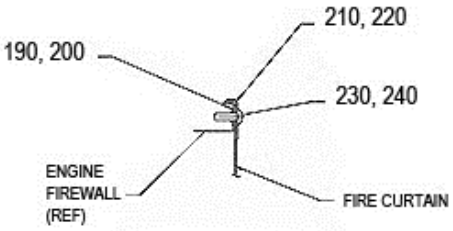

SECTION A-A

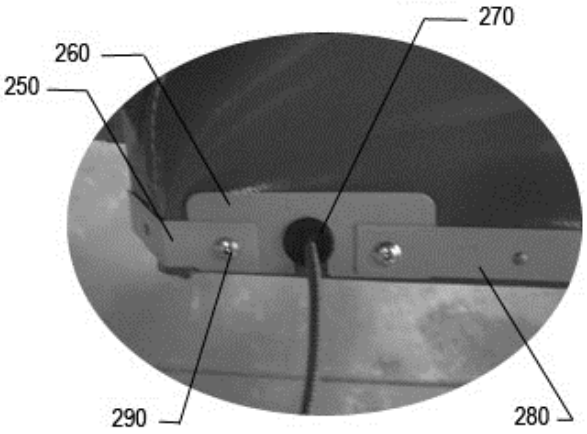

Detail B

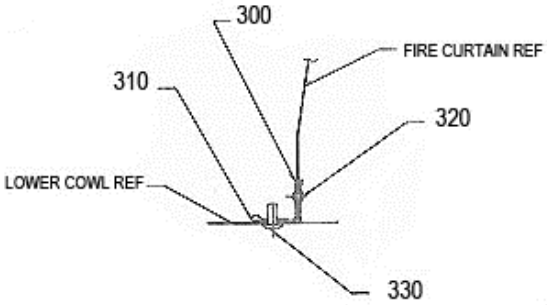

SECTION B-B

Sheet 2 of 3

FIGURE 6-1.1 FIRE CURTAIN INSTALLATION

UNCONTROLLED COPY WHEN DOWNLOADED OR PRINTED

Visit www.enstromhelicopter.com for instructions to order an original manual and to register for email notification of updates.

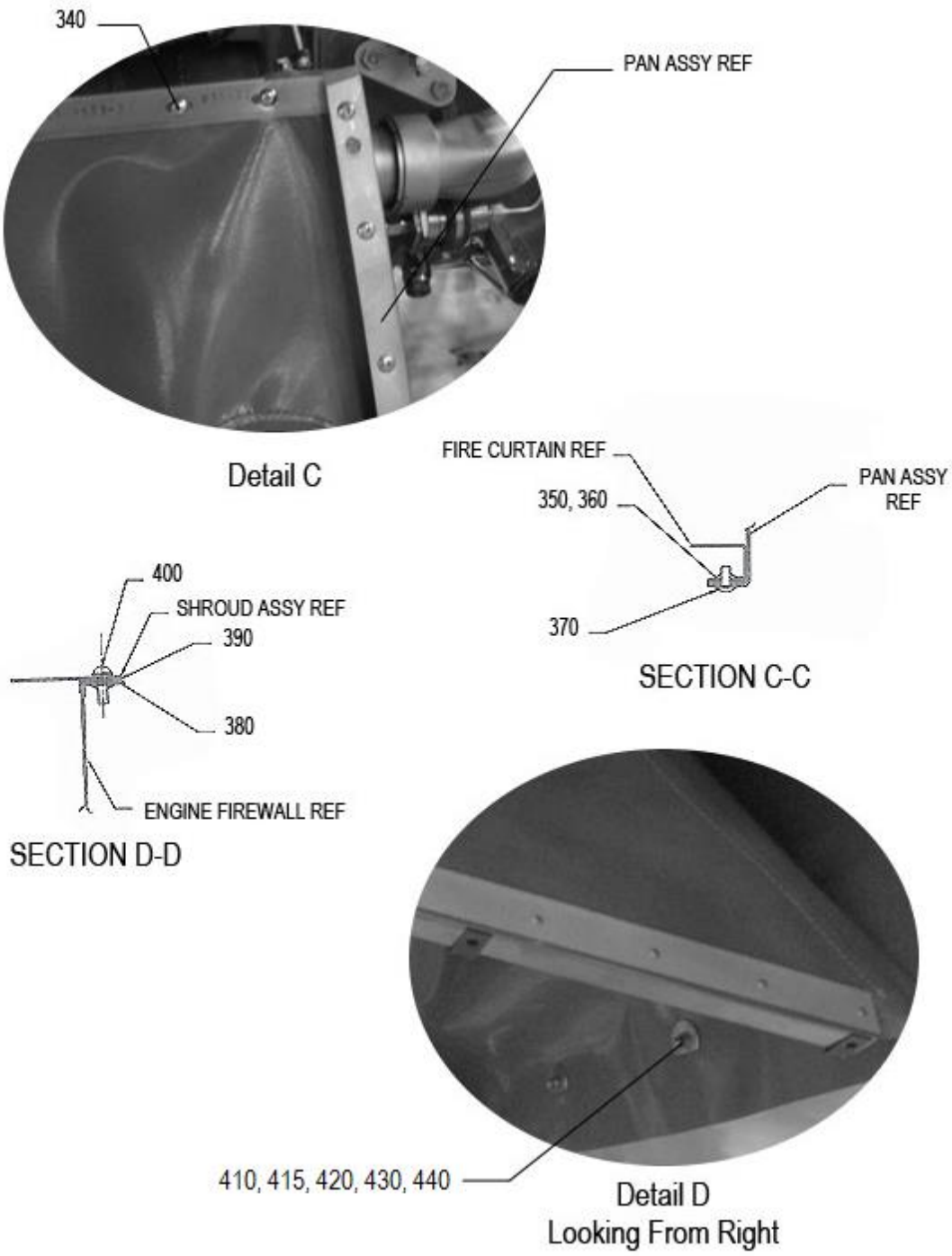

Sheet 3 of 3

FIGURE 6-1.1 FIRE CURTAIN INSTALLATION

UNCONTROLLED COPY WHEN DOWNLOADED OR PRINTED

Visit www.enstromhelicopter.com for instructions to order an original manual and to register for email notification of updates.

FIGURE 6-1.1 FIRE CURTAIN INSTALLATION

ITEM NUMBER	PART NUMBER	DESCRIPTION	QTY PER ASSY	EFFECTIVITY		
				TH-28	480	480B
–*	4119500-107	Fire Curtain Installation	REF		X	X
10	4119526-1	. Fire Curtain Assembly	1		X	X
20	4119525-37	. Angle	1		X	X
30	8X1/2	. Screw	10		X	X
40	4119525-23	. Angle	1		X	X
50	4119525-45	. Strip	1		X	X
60	4119525-33	. Angle	1		X	X
70	4119525-43	. Strip	1		X	X
80	4119525-41	. Angle	1		X	X
90	4119525-49	. Strip	1		X	X
100	A01787-8Z-1D	. Tinnerman Nut	9		X	X
110	8X1/2	. Screw	9		X	X
120	MS20470A3-3	. Rivet	24		X	X
130	4119525-105	. Pan Assy	1		X	X
140	4119525-61	. Strip	2		X	X
150	4119525-107	. Shroud Assy	1		X	X
160	4119525-65	. Strip (L/H)	1		X	X
170	4119525-66	. Strip (R/H)	1		X	X
180	8X1/2	. Screw	8		X	X
190	4119525-101	. Strip Assy.	1		X	X
–	4119525-53	. . Strip	1		X	X
–	NAS686-A08K	. . Nutplate	2		X	X
–	A06195-8Z-1D	. . Tinnerman	2		X	X
–	MS20427M3-3E	. . Rivet	8		X	X
200	4119525-103	. Strip Assy	1		X	X
–	4119525-55	. . Strip	1		X	X
–	A06195-8Z-1D	. . Tinnerman	2		X	X
–	MS20427M3-3E	. . Rivet	2		X	X
210	4119525-27	. Angle (L/H)	1		X	X
220	4119525-29	. Angle (R/H)	1		X	X
230	AN525-8R8	. Screw	4		X	X
240	AN960-8L	. Washer	4		X	X
250	4119525-51	. Strip	1		X	X
260	4119525-47	. Plate	1		X	X
270	AN931-3-9	. Grommet	1		X	X
280	4119525-25	. Strip	1		X	X
290	8X1/2	. Screw	2		X	X

UNCONTROLLED COPY WHEN DOWNLOADED OR PRINTED

Visit www.enstromhelicopter.com for instructions to order an original manual and to register for email notification of updates.

FIGURE 6-1.1 FIRE CURTAIN INSTALLATION

ITEM NUMBER	PART NUMBER	DESCRIPTION	QTY PER ASSY	EFFECTIVITY		
				TH-28	480	480B
300	4119525-3	. Angle Assy	1		X	X
–	4119525-21	. . Angle	1		X	X
310	A01787-8Z-1D	. . Tinnerman	9		X	X
320	MS20470A3-3	. Rivet	21		X	X
330	8X1/2	. Screw	9		X	X
340	8X1/2	. Screw	8		X	X
350	4119525-109	. Strip Assy	1		X	X
–	4119525-63	. . Strip	1		X	X
–	A06195-8Z-1D	. . Tinnerman	5		X	X
–	MS20427M3-3E	. . Rivet	10		X	X
360	4119525-110	. Strip Assy	1		X	X
–	4119525-64	. . Strip	1		X	X
–	A06195-8Z-1D	. . Tinnerman	5		X	X
–	MS20427M3-3E	. . Rivet	10		X	X
370	8X3/8	. Screw	10		X	X
380	4119525-5	. Angle Assy	1		X	X
–	4119525-19	. . Angle	1		X	X
–	A06195-6Z-1D	. . Tinnerman	3		X	X
–	A06195-8Z-1D	. . Tinnerman	10		X	X
–	MS20427M3-3E	. . Rivet	26		X	X
390	4119525-15	. Angle	1		X	X
400	8X1/2	. Screw	6		X	X
410	AN3-11A	. Bolt	4		X	X
415	NAS1149D0363J	. Washer	4		X	X
420	4119518-11	. Washer	4		X	X
430	NAS1149F0363P	. Washer	4		X	X
440	MS21042-3	. Nut	4		X	X
450	4119519-23	. Patch	2		X	X
460	4119519-25	. Patch	1		X	X
470	4119519-27	. Patch	2		X	X
480	4119519-29	. Patch	2		X	X

* Fire Curtain Repair Kit P/N 4119526-KIT is available by contacting Enstrom Customer Service. The kit contains fire curtain fabric, thread, and sealant for performing fire curtain repairs.

UNCONTROLLED COPY WHEN DOWNLOADED OR PRINTED

Visit www.enstromhelicopter.com for instructions to order an original manual and to register for email notification of updates.

INTENTIONALLY LEFT BLANK

UNCONTROLLED COPY WHEN DOWNLOADED OR PRINTED

Visit www.enstromhelicopter.com for instructions to order an original manual and to register for email notification of updates.

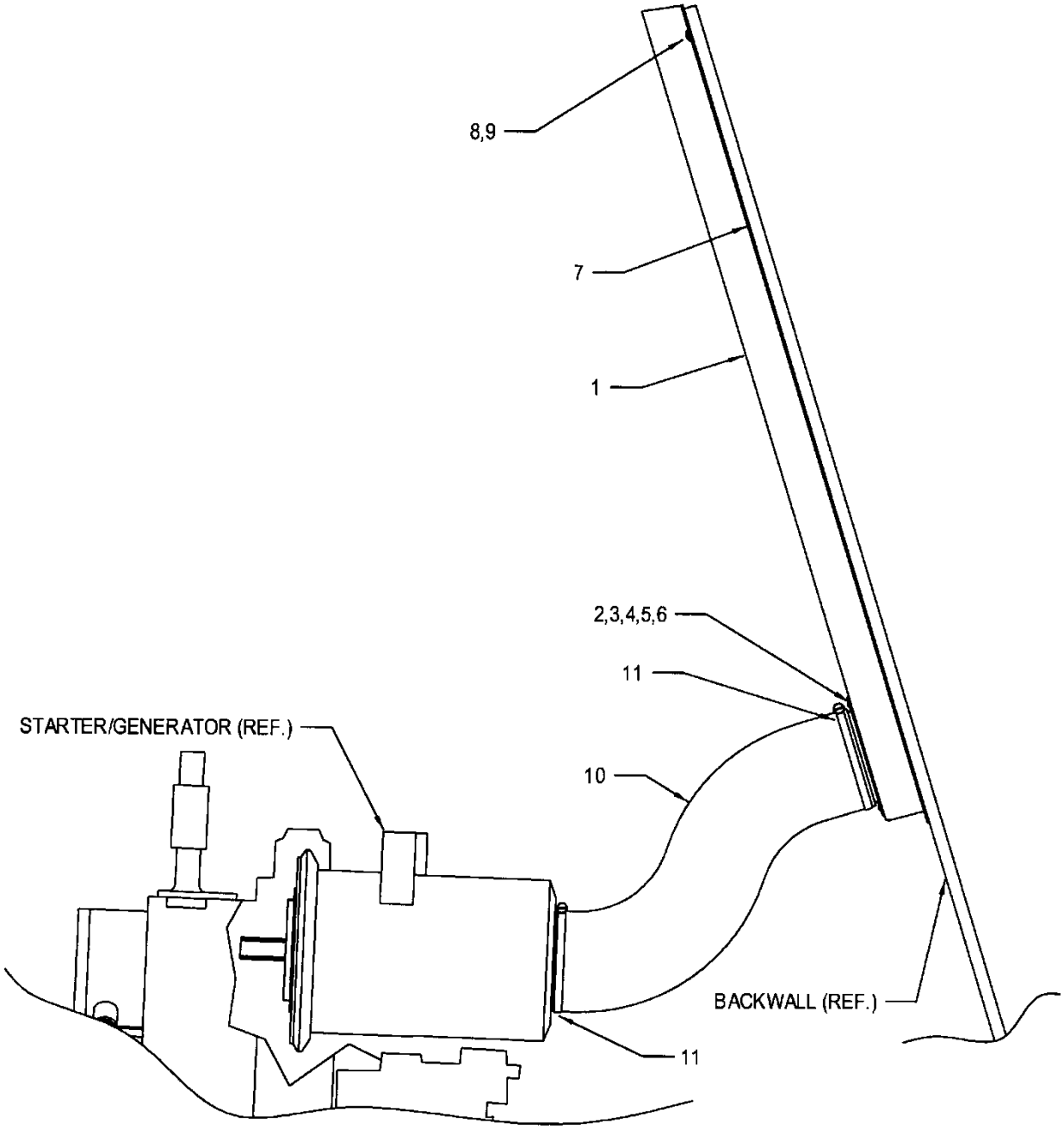

480B S/N 5114 and Subsequent

480B equipped with Increased Cooling Kit, P/N 4230031

FIGURE 6-2 STARTER/GENERATOR COOLING INSTALLATION

UNCONTROLLED COPY WHEN DOWNLOADED OR PRINTED

Visit www.enstromhelicopter.com for instructions to order an original manual and to register for email notification of updates.

FIGURE 6-2 STARTER/GENERATOR COOLING INSTALLATION

ITEM NUMBER	PART NUMBER	DESCRIPTION	QTY PER ASSY	EFFECTIVITY		
				TH-28	480	480B
1	4199057-1	. Air Duct Assembly	1			X
1●	4199057-3	. Air Duct Assembly	1			X
2	28-12356-1	. . Stub	1			X
3‡	MS27039-0807	. . Screw	4			X
4‡	4199057-13	. . Doubler Ring	1			X
4†	4199057-15	. . Doubler Ring	1			X
5‡	NAS686A08K	. . Nut Plate	4			X
6‡	MS20426AD3-3	. . Rivet	8			X
6†	MS20470A3-4	. . Rivet	6			X
7	4941	. Tape, VHB	A/R			X
8*	MS27039-1-07	. Screw	8			X
9*	AN960-10	. Washer	8			X
8**	MS27039-0806	. Screw	8			X
9**	AN960-8	. Washer	8			X
10	SCEET12	. Duct, 16.0 inches long	1			X
11	NAS1922-0350-3	. Clamp	2			X

* 480B S/N 5114 through 5116.

** 480B S/N 5117 and subsequent.

● 480B S/N 5098 only.

† Used with 4199057-1 Air Duct Assembly

‡ Used with 4199057-3 Air Duct Assembly

UNCONTROLLED COPY WHEN DOWNLOADED OR PRINTED

Visit www.enstromhelicopter.com for instructions to order an original manual and to register for email notification of updates.

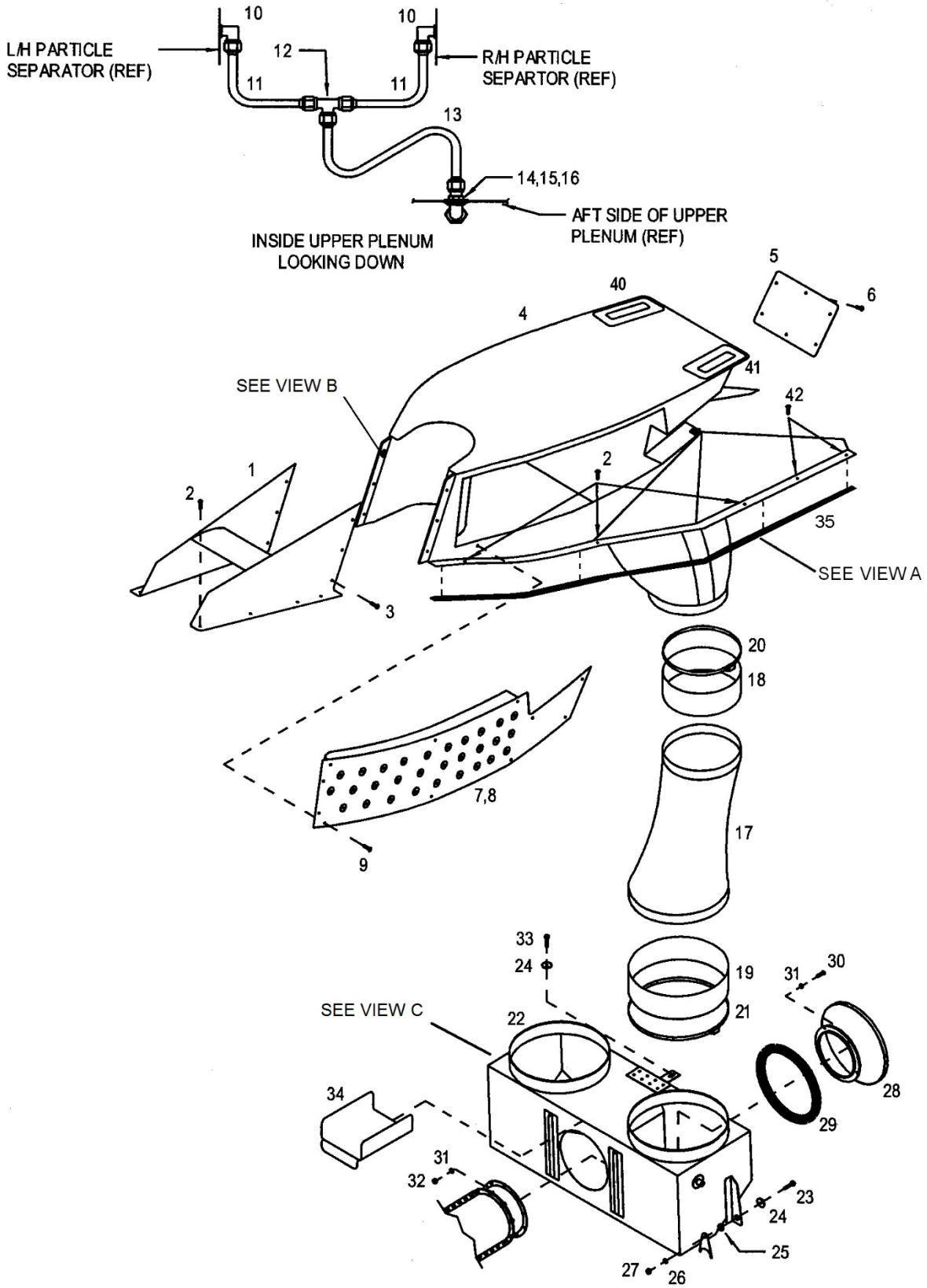

Sheet 1 of 3

FIGURE 6-3. ENGINE AIR INDUCTION SYSTEM

UNCONTROLLED COPY WHEN DOWNLOADED OR PRINTED

Visit www.enstromhelicopter.com for instructions to order an original manual and to register for email notification of updates.

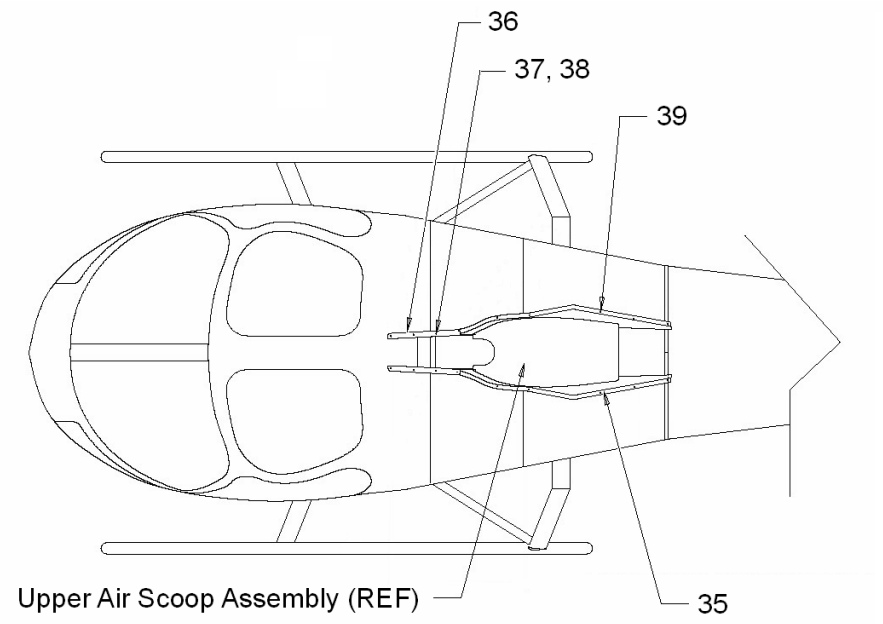

View A
Upper Air Scoop Gasket Installation

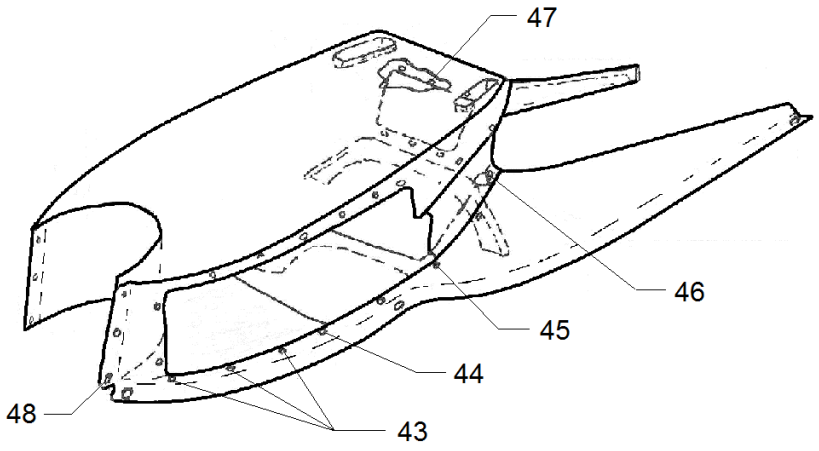

View B
Upper Air Scoop Nutplate Installation

Sheet 2 of 3

FIGURE 6-3. ENGINE AIR INDUCTION SYSTEM

UNCONTROLLED COPY WHEN DOWNLOADED OR PRINTED

Visit www.enstromhelicopter.com for instructions to order an original manual and to register for email notification of updates.

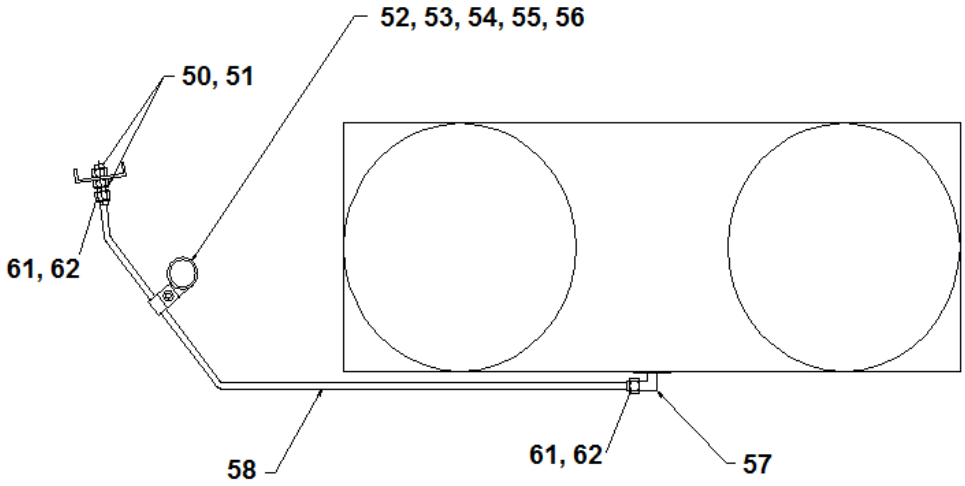

VIEW LOOKING DOWN

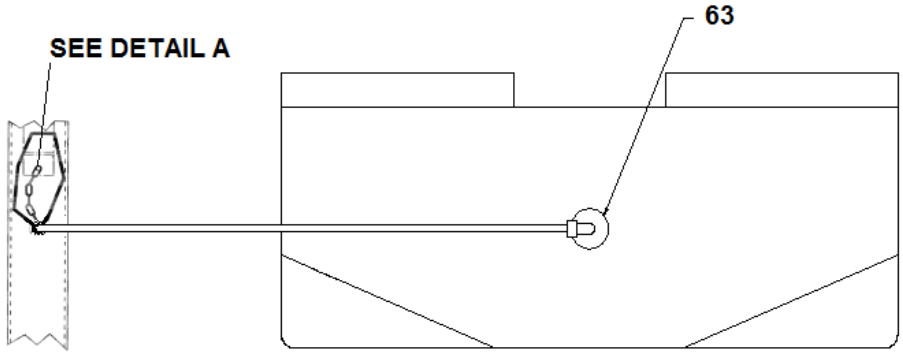

VIEW LOOKING FORWARD

VIEW C

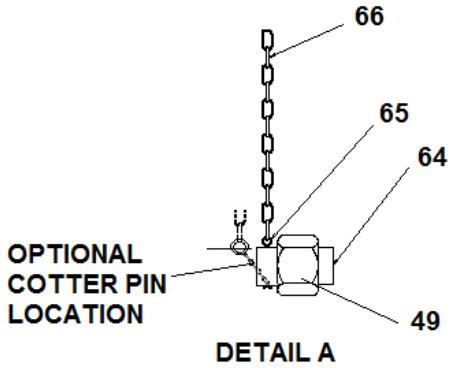

DETAIL A

Sheet 3 of 3

FIGURE 6-3. ENGINE AIR INDUCTION SYSTEM

UNCONTROLLED COPY WHEN DOWNLOADED OR PRINTED

Visit www.enstromhelicopter.com for instructions to order an original manual and to register for email notification of updates.

FIGURE 6-3 ENGINE AIR INDUCTION SYSTEM

ITEM NUMBER	PART NUMBER	DESCRIPTION	QTY PER ASSY	EFFECTIVITY		
				TH-28	480	480B
1	4120506-11	. Forward Air Scoop	1	X	X	X
2	AN525-10R10	. Screw	14	X	X	X
3	AN525-10R7	. Screw	6	X	X	X
–	4508-1	. Foam Tape	A/R	X	X	X
–	4120500-901	. Upper Plenum/Air Inlet Assembly	1	X	X	X
4	4120507-1	. . Upper Air Scoop Assembly	1	X	X	X
5	4120514-11	. . . Door	1	X	X	X
6	AN525-10R6	. . . Screw	6	X	X	X
–†	4508-1	. . . Foam Tape	A/R	X	X	X
7*	ECD4066-1	. . Particle Separator, L/H	1	X		X
7**	ECD4066-3	. . Particle Separator, L/H (Alternate)	1	X	X	X
8*	ECD4066-2	. . Particle Separator, R/H	1	X		X
8**	ECD4066-4	. . Particle Separator, R/H (Alternate)	1	X	X	X
9	AN525-10R7	. . Screw	36	X	X	X
9	AN525-10R7	. . Screw (Used with ECD4066-3 &-4)	22	X	X	
–	4508-1	. . Foam Tape	A/R	X	X	X
10	MS51527A-6S	. . Elbow	2	X	X	X
11	4120515-1	. . Line Assembly	2	X	X	X
12	AN824-6J	. . Tee	1	X	X	X
13	4120515-3	. . Line Assembly	1	X	X	X
14	AN833-6J	. . Elbow	1	X	X	X
15	AN960-916	. . Washer	2	X	X	X
16	AN924-6J	. . Nut	1	X	X	X
–	4120509-1	. Duct Assembly	2	X	X	X
–Δ	4120509-3	. Duct Assembly	1	X	X	X
17	4120509-11	. . Duct	1	X	X	X
17	4120509-17	. . Duct (Used with 4120509-3)	1	X	X	X
18	4120516-11	. . Boot	1	X	X	X
19	4120516-13	. . Boot	1	X	X	X
20	NAS1922-0700-3	. Clamp	2	X	X	X
21	NAS1922-0925-3	. Clamp	2	X	X	X
22††	4120510-905	. Lower Plenum Assembly (Alternate)				
22●	4120510-5	. Lower Plenum Assembly	1	X	X	X
22	4120510-3	. Lower Plenum Assembly (Superseded by 4120510-5)	1	X	X	X
23	AN3-5A	. Bolt	2	X	X	X
24	AN960-3	. Washer	3	X	X	X

UNCONTROLLED COPY WHEN DOWNLOADED OR PRINTED

Visit www.enstromhelicopter.com for instructions to order an original manual and to register for email notification of updates.

FIGURE 6-3 ENGINE AIR INDUCTION SYSTEM

ITEM NUMBER	PART NUMBER	DESCRIPTION	QTY PER ASSY	EFFECTIVITY		
				TH-28	480	480B
25	AN970-3	. Washer	A/R	X	X	X
26	AN970-3	. Washer	2	X	X	X
27	MS21042-3	. Nut	2	X	X	X
–	4120532-9	. Bellmouth Assembly	1	X	X	X
28	369H8011	. . Bellmouth	1	X	X	X
29	ECD4064-13	. . Seal	1	X	X	X
30	AN515-8R10	. Screw	5	X	X	X
31	AN960-8	. Washer	10	X	X	X
32	MS21042-08	. Nut	5	X	X	X
33	AN3-3A	. Bolt	1	X	X	X
34	4120521-11	. Shield	1	X	X	X
–	4910-50	. . Tape	A/R	X	X	X
35†	4120525-11	. Spacer (Nitrile rubber, 1/16” or 1.6 mm thick)	2		X	X
35†	4120525-13	. Spacer (Nitrile rubber, 1/8” or 3.2 mm thick)	2		X	X
36	4120525-15	. Gasket	2		X	X
37	AN525-10R10	. Screw, Machine	6		X	X
38	732-RTV	. Sealant: Rubber, Clear Silicone	A/R		X	X
39	AN525-10R10	. Screw, Machine	12		X	X
40††	4119351-15	. Hand Hold Right Side	1		X	X
40	4119351-11	. Hand Hold Right Side (Superseded by 4119351-15)	1		X	X
41††	4119351-17	. Hand Hold Left Side	1		X	X
41	4119351-15	. Hand Hold Left Side (Superseded by 4119351-17 for left side only)	1		X	X
42	AN525-10R12	. Screw	4	X	X	X
43	NAS1068A3	. . Nutplate	6	X	X	X
–◊	MS20426A3-3	. . Rivet	12	X	X	X
44▲	MS21061L3	. . Nutplate	2	X	X	X
–◊	MS20426A3-3	. . Rivet	4	X	X	X
45	NAS1474-A3	. . Nutplate	26	X	X	X
–◊	MS20426A3-3	. . Rivet	52	X	X	X
46	22NA27-22-02	. . Nutplate	2	X	X	X
–◊	CR3213-4-03	. . Rivet	4	X	X	X
47	NAS1474-A3	. . Nutplate	6	X	X	X
–◊	MS20426A3-3	. . Rivet	12	X	X	X
48	NAS1068A3	. . Nutplate	6	X	X	X
–◊	MS20426A3-3	. . Rivet	12	X	X	X

UNCONTROLLED COPY WHEN DOWNLOADED OR PRINTED

Visit www.enstromhelicopter.com for instructions to order an original manual and to register for email notification of updates.

FIGURE 6-3 ENGINE AIR INDUCTION SYSTEM

ITEM NUMBER	PART NUMBER	DESCRIPTION	QTY PER ASSY	EFFECTIVITY		
				TH-28	480	480B
–	4220037	Engine Wash System	REF	X	X	X
49	4220037-5	. Cap/Lanyard Assembly	1	X	X	X
50	AN832-4D	. Fitting	1	X	X	X
51	AN924-4D	. Nut	1	X	X	X
52	MS21919WCJ4	. Clamp	1	X	X	X
53	MS21919WCJ14	. Clamp	1	X	X	X
54	MS35206-245	. Screw	1	X	X	X
55	AN960-8L	. Washer	2	X	X	X
56	AN364-832A	. Nut	1	X	X	X
57	MS20822-4D	. Elbow	1	X	X	X
58	4220037-3	. Tube Assembly	1	X	X	X
–	4220037-15	. . Tube	1	X	X	X
61	AN818-4D	. . Nut	2	X	X	X
62	MS20819-4D	. . Sleeve	2	X	X	X
63	4220037-1	. Nozzle Installation	1	X	X	X
–	4220037-2	. . Nozzle Assembly	1	X	X	X
–	CR3213-4-02	. . Rivet	4	X	X	X
64	AN929A4S	. Cap Assembly	1	X	X	X
65	MS24665-1013	. Cotter Pin	1	X	X	X
66	2/0	. Brass Chain (Links)	9	X	X	X

* TH-28: 3007 & Subsequent; 480B: 5043 - 5046, 5048 & Subsequent. Retrofittable to all models.

** TH-28: 3006, 480: All; 480B: 5042 & 5047.

† Thickness as required to ensure a minimum 3.2 mm clearance between the upper plenum/air inlet and the drive belt. Foam tape 4508-1 is not used when the spacer is installed.

● Effectivity 480B S/N 5155 and subsequent. Retrofittable to 480 S/N 5001 and 480B S/N 5042 and subsequent.

†† Effective 480B S/N 5152 the 4119351-15 replaced both 4119351-11 hand holds. Effective 480B S/N 5155 the 4119351-17 replaced the 4119351-15 on the left side of the ship. All dash numbers are retrofittable to 480 S/N 5001 to 5041 and 480B S/N 5042 and subsequent.

Δ One (1) assembly installed on the left side for S/N equipped with air conditioner installation P/N 4220176.

◊ Refer to SDB T-060, latest revision, for nutplate installation requirement.

▲ Effectivity 480B S/N 5242 and subsequent; Eligibility 480/B S/N 5241 and prior (NAS1068-A3 originally installed).

†† Includes engine wash kit nozzle.

UNCONTROLLED COPY WHEN DOWNLOADED OR PRINTED

Visit www.enstromhelicopter.com for instructions to order an original manual and to register for email notification of updates.

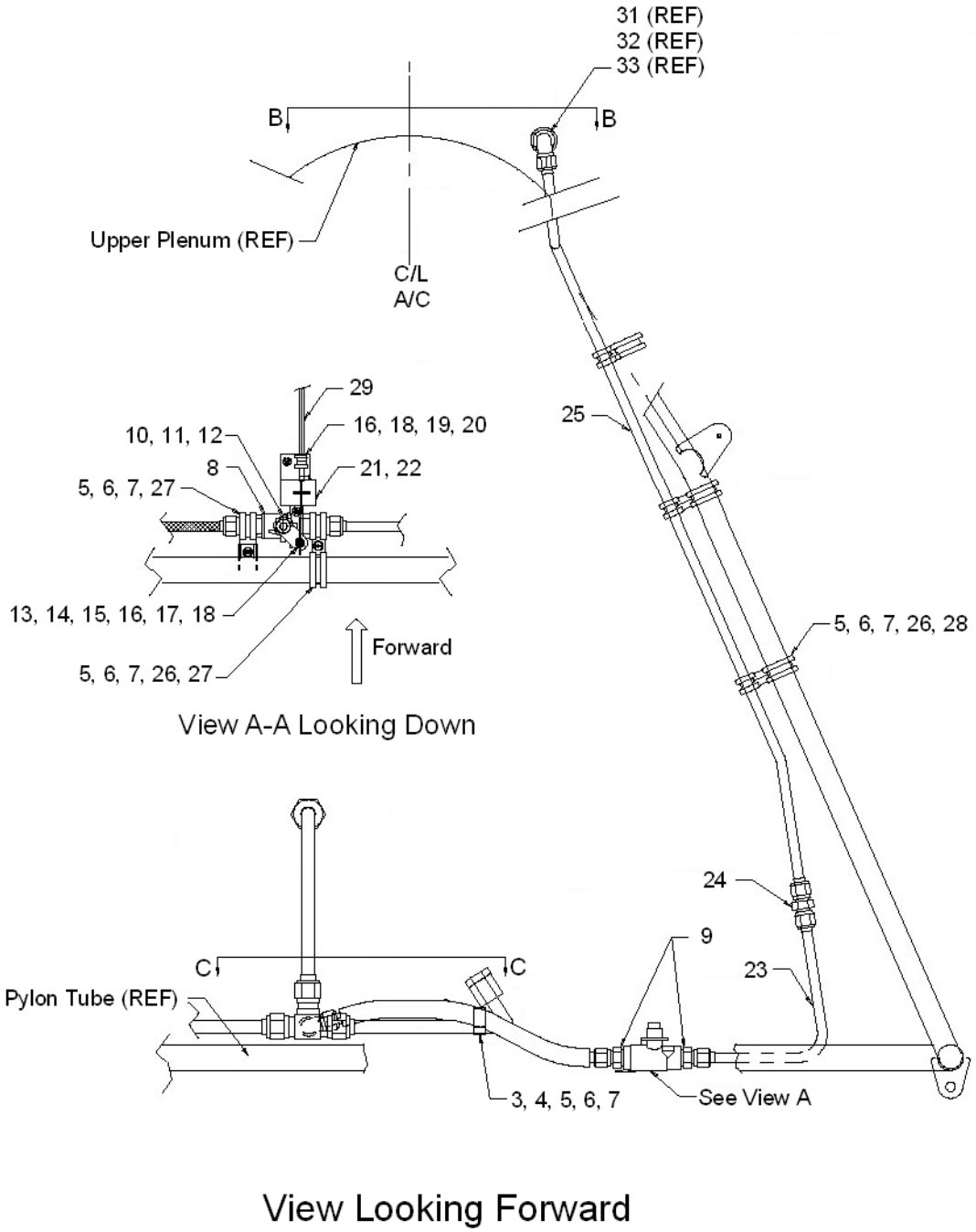

Sheet 1 of 2

FIGURE 6-4 PARTICLE SEPARATOR/SCAV-AIR LINE INSTALLATION

UNCONTROLLED COPY WHEN DOWNLOADED OR PRINTED

Visit www.enstromhelicopter.com for instructions to order an original manual and to register for email notification of updates.

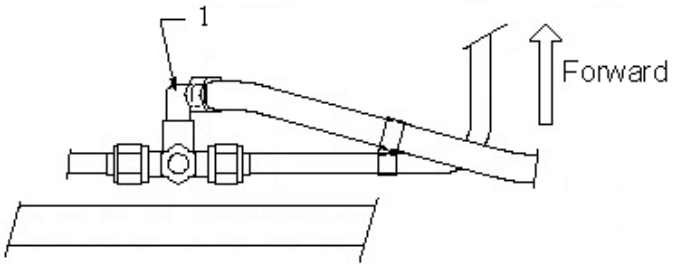

View C-C
Looking Down

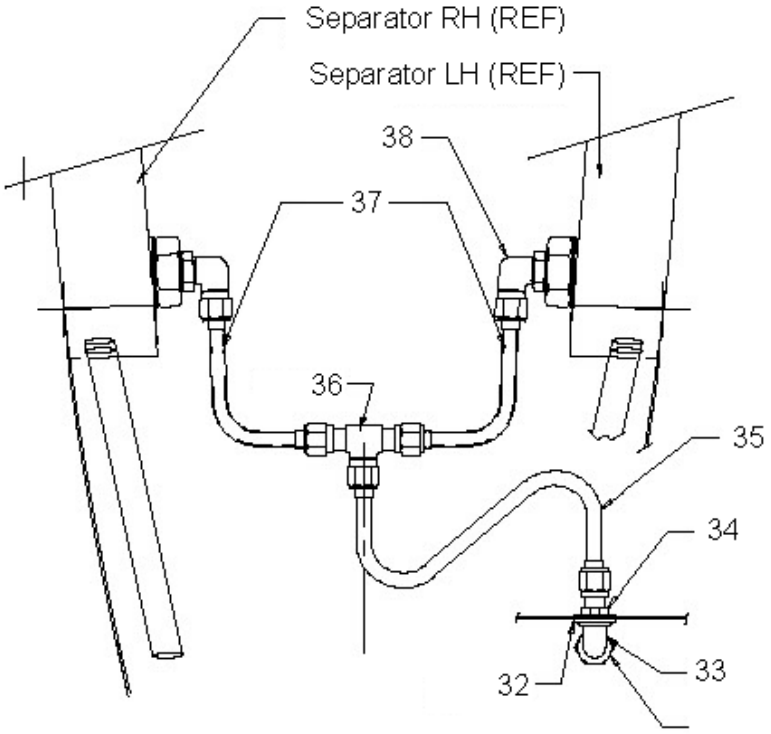

Particle Separator Lines
View B-B
Looking Down

Sheet 2 of 2

FIGURE 6-4 PARTICLE SEPARATOR/SCAV-AIR LINE INSTALLATION

UNCONTROLLED COPY WHEN DOWNLOADED OR PRINTED

Visit www.enstromhelicopter.com for instructions to order an original manual and to register for email notification of updates.

FIGURE 6-4 PARTICLE SEPARATOR/SCAV-AIR LINE INSTALLATION

ITEM NUMBER	PART NUMBER	DESCRIPTION	QTY PER ASSY	EFFECTIVITY		
				TH-28	480	480B
–	4120513-3	Scavenge Air Installation	REF	X	X	X
1	MS51527A6S	.Elbow	1	X	X	X
–	MS28778-6	. O-Ring	A/R	X	X	X
2	4120511-1	. Hose Assembly	1	X	X	X
3**	S500-8	. Clamp	1	X	X	X
3	AN742F8	. Clamp (Superseded by S500-8)	1	X	X	X
4*	S500-12	. Clamp	1	X	X	X
4	AN742F10	. Clamp (Superseded by S500-12)	1	X	X	X
5	AN515-8R8	. Screw	6	X	X	X
6	AN960-8L	. Washer	12	X	X	X
7*	MS1042-08	. Nut	6	X	X	X
7	AN364-832A	. Nut (Superseded by MS1042-08)	6	X	X	X
–	4120036-1	. Valve Assembly Scavenge Air System	1	X	X	X
–	300-097	. Silver Grade Anti-Seize, Locktite	A/R	X	X	X
–	767	. Silver Grade Anti-Seize, Locktite	A/R	X	X	X
8	4120027-1	. . Valve	1	X	X	X
9	6-6FBTX-SS	. . Adapter	2	X	X	X
10	4120025-15	. . Arm	1	X	X	X
11	MS35333-75	. . Washer	1	X	X	X
12	MS35649-2314	. . Nut	1	X	X	X
13†	4122015-23	. . Screw	1	X	X	X
13	4122015-11	. . Screw (Superseded by 4122015-23)	1	X	X	X
14	AN515-8R10	. . Screw	1	X	X	X
15	AN340-832	. . Nut	1	X	X	X
16	AN960-8L	. . Washer	3	X	X	X
17	AN960-8	. . Washer	2	X	X	X
18	AN364-832A	. . Nut	1	X	X	X
19	AN515-8R8	. . Screw	1	X	X	X
20	MS21919WDG3	. . Clamp	1	X	X	X
21	4120026-15	. . Bracket	1	X	X	X
21	4120026-13	. . Bracket (Superseded by 4120026-15)	1	X	X	X
22	AN507-1024R7	. . Screw	2	X	X	X
23	4120517-15	. Line Assembly	1	X	X	X
24	AN815-6J	. Union	1	X	X	X
25	4120517-17	. Line Assembly	1	X	X	X
26	MS21919WDG16	. Clamp	4	X	X	X
27●	S500-14	. Clamp	3	X	X	X
27	MS21919WDG14	. Clamp (Superseded by S500-14)	1	X	X	X

UNCONTROLLED COPY WHEN DOWNLOADED OR PRINTED

Visit www.enstromhelicopter.com for instructions to order an original manual and to register for email notification of updates.

FIGURE 6-4 PARTICLE SEPARATOR/SCAV-AIR LINE INSTALLATION

ITEM NUMBER	PART NUMBER	DESCRIPTION	QTY PER ASSY	EFFECTIVITY		
				TH-28	480	480B
28●	S500-6	. Clamp	3	X	X	X
28	MS21919WDG6	. Clamp (Superseded by S500-6)	3	X	X	X
29	4129560-7	. Cable Assembly	1		X	X
29*	A-700	. Cable Assembly	1	X	X	
30	CP25WB+	. Caulk: Barrier, 3M Fire	A/R	X	X	X
31	AN964-6C	. Nut	1		X	X
32**	AN960-916	. Washer	2		X	X
33**	AN833-6J	. Fitting	1		X	X
34**	AN924-6J	. Fitting	1		X	X
35**	4120515-7	. Line	1		X	X
36**	AN824-6J	. Fitting	1		X	X
37**	4120515-5	. Line Assembly	2		X	X
38**	MS51527A65	. Fitting	3		X	X

* 480, S/N 5001

** Effectivity 480/480B S/N 5134 and subsequent.

† Effectivity 480B S/N 5136 and subsequent. Retrofittable to 480 S/N 5100 - 5041, 480B S/N 5042 and subsequent.

● Effectivity 480B S/N 5155 and subsequent. Retrofittable to 480 S/N 5100 - 5041, 480B S/N 5042 and subsequent.

UNCONTROLLED COPY WHEN DOWNLOADED OR PRINTED

Visit www.enstromhelicopter.com for instructions to order an original manual and to register for email notification of updates.

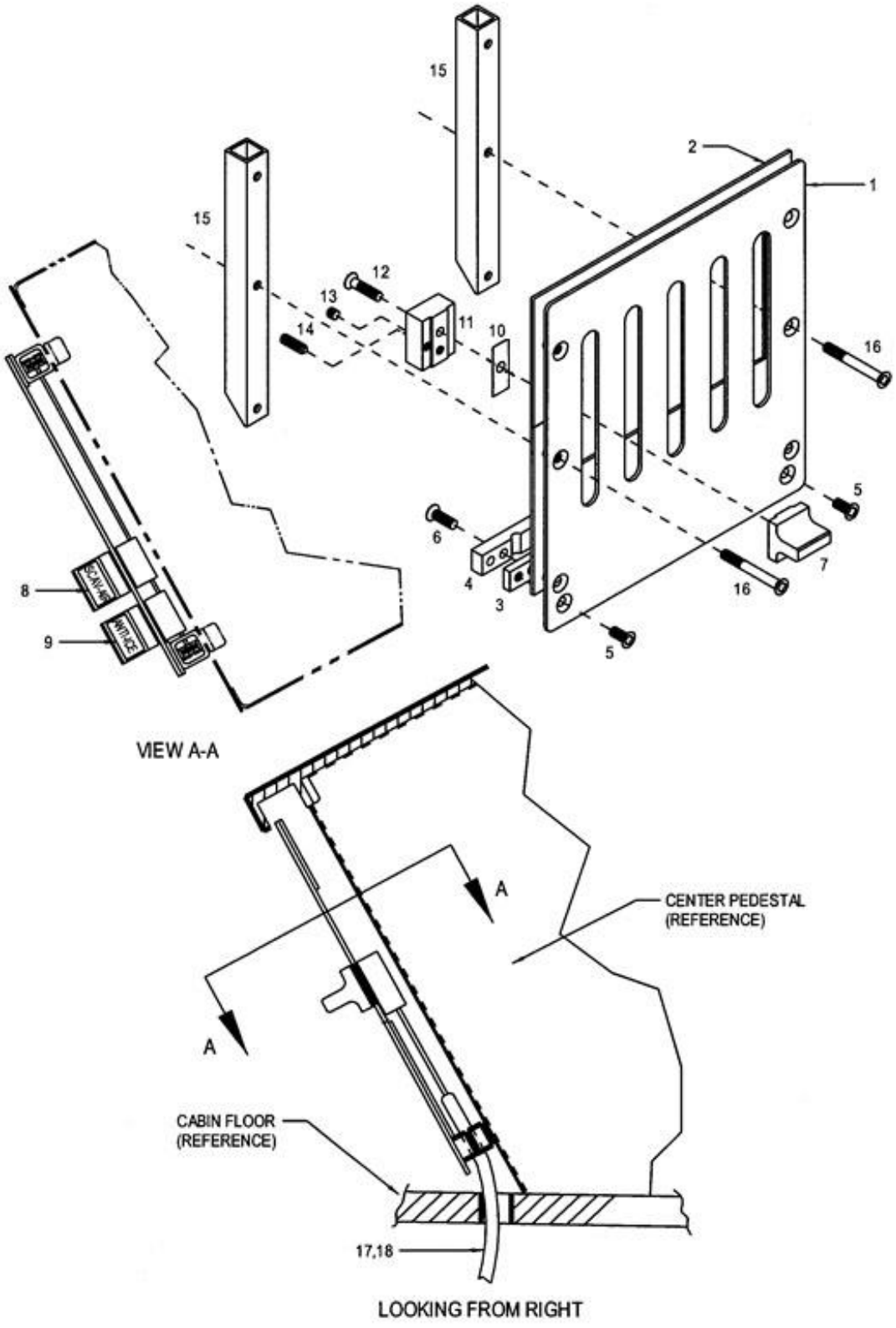

FIGURE 6-5 SCAV-AIR/ANTI-ICE CONTROL PANEL INSTALLATION

UNCONTROLLED COPY WHEN DOWNLOADED OR PRINTED

Visit www.enstromhelicopter.com for instructions to order an original manual and to register for email notification of updates.

FIGURE 6-5 SCAV-AIR/ANTI-ICE CONTROL PANEL INSTALLATION

ITEM NUMBER	PART NUMBER	DESCRIPTION	QTY PER ASSY	EFFECTIVITY		
				TH-28	480	480B
–	4182142-1	. Slider Control Panel Assembly	1		X	X
1	4129534-11	. . Slide Plate	1		X	X
2**	4129538-17	. . Stop Plate	1		X	X
2	4129538-15	. . Stop Plate (Superseded by 4129538-17)	1		X	X
3	4129535-13	. . Cable Block	1		X	X
4	4129535-11	. . Cable Block	1		X	X
5	AN507-832R6	. . Screw	2		X	X
6	AN507-832R7	. . Screw	6		X	X
7	4129533-11	. . Upper Slide	2*		X	X
8	4119894-23	. . Placard (SCAV-AIR)	1		X	X
9	4119894-21	. . Placard (ANTI-ICE)	1		X	X
10	4129533-15	. . Shim	A/R		X	X
11	4129533-13	. . Slide	2*		X	X
12	AN509-8R10	. . Screw	2*		X	X
13	300-166	. . Set Screw	2*		X	X
14 ≡	K1A-N	. . Ball Plunger	2*		X	X
15	4129549-11	. . Spacer	2		X	X
16	AN509-8R14	. . Screw	6		X	X
17	4129560-7	. Cable Assembly (SCAV-AIR)	1		X	X
18	4129560-9	. Cable Assembly (ANTI-ICE)	1		X	X

* The SCAV-AIR and ANTI-ICE controls are standard equipment for the 480/480B. Adjust the quantities as required if the optional bleed air heater/defroster system and/or the ram air ventilation system are installed.

≡ See Appendix A for equivalent part information.

** Effectivity 480B S/N 5176 and subsequent. Retrofittable to 480 S/N 5001 – 5042, 480B S/N 5042 and subsequent. If helicopter is equipped with heater or defrost option replace 4129538-17 with -19 model. If equipped with both heater and defrost option, replace 4129538-17 with -21 model.

UNCONTROLLED COPY WHEN DOWNLOADED OR PRINTED

Visit www.enstromhelicopter.com for instructions to order an original manual and to register for email notification of updates.

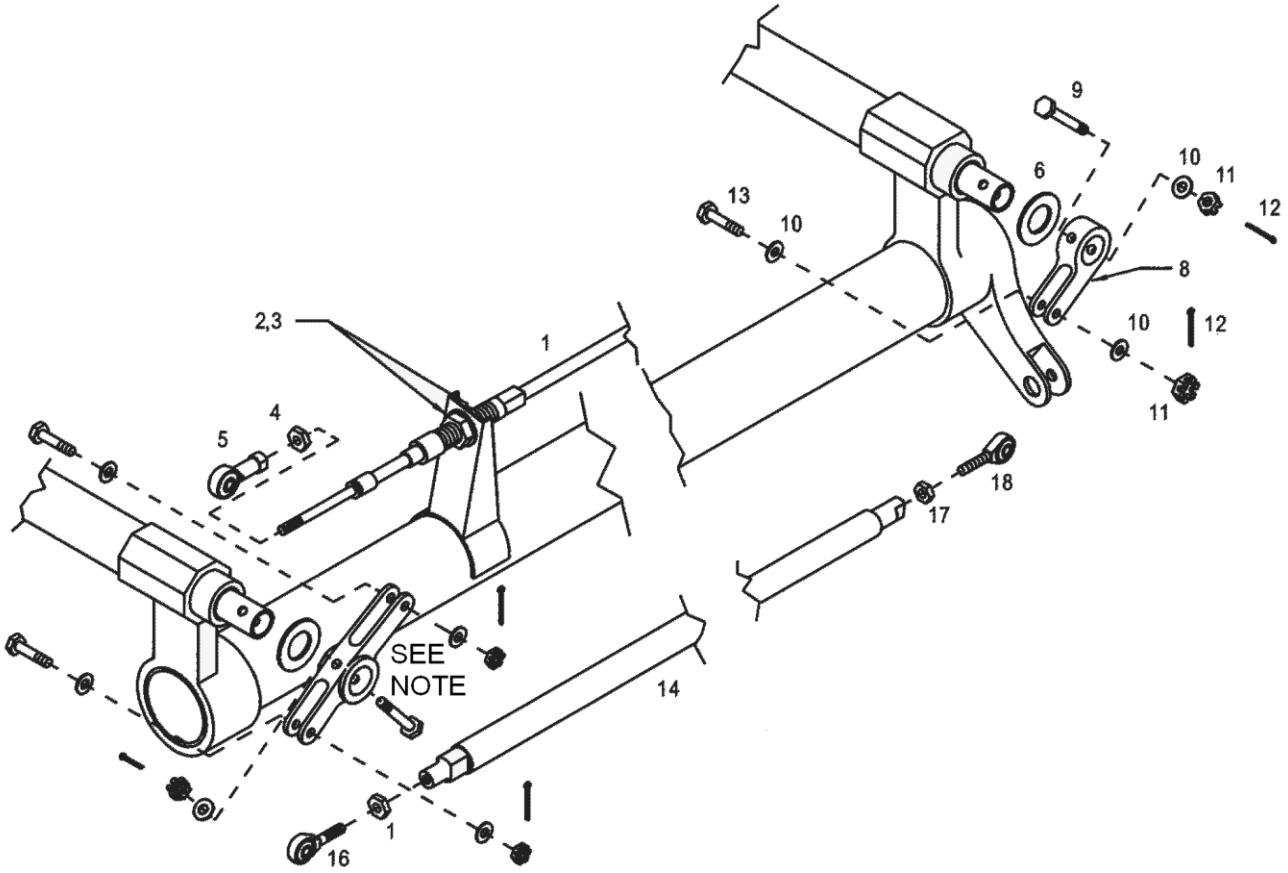

Note: See Figure 9-6 or 9-7.1 Collective Assembly for complete collective installation.

Sheet 1 of 2

FIGURE 6-6 ENGINE POWER CONTROL INSTALLATION

UNCONTROLLED COPY WHEN DOWNLOADED OR PRINTED

Visit www.enstromhelicopter.com for instructions to order an original manual and to register for email notification of updates.

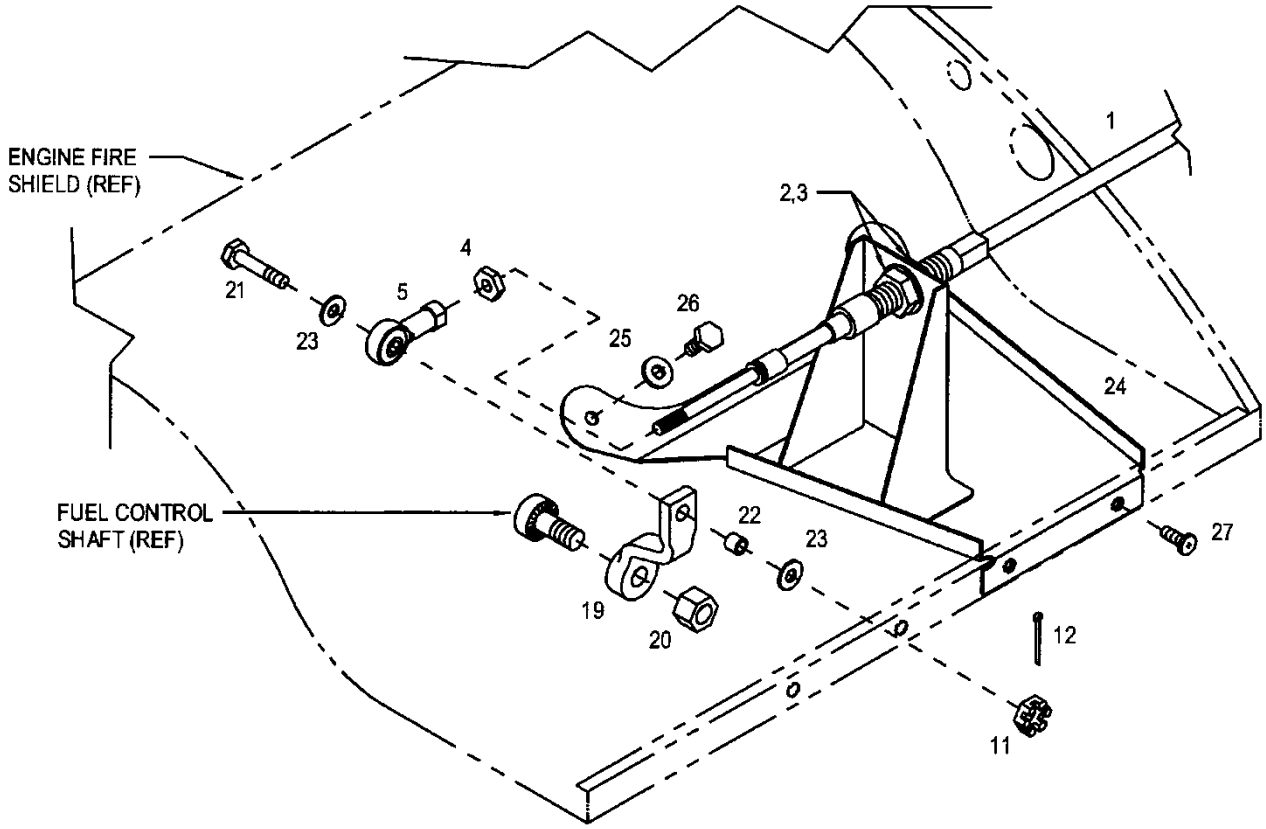

RIGHT SIDE OF ENGINE

Sheet 2 of 2

FIGURE 6-6 ENGINE POWER CONTROL INSTALLATION

UNCONTROLLED COPY WHEN DOWNLOADED OR PRINTED

Visit www.enstromhelicopter.com for instructions to order an original manual and to register for email notification of updates.

FIGURE 6-6 ENGINE POWER CONTROL INSTALLATION

ITEM NUMBER	PART NUMBER	DESCRIPTION	QTY PER ASSY	EFFECTIVITY		
				TH-28	480	480B
1‡	ECD4094-1	. Cable Assembly	1		X	X
1 ≡	3SNE094A-72	. Cable Assembly (Superseded by ECD4094-1)	1	X	X	X
2	AN936A716	. Lock Washer	4	X	X	X
3	AN316-7	. Nut	4	X	X	X
4	AN315-3R	. Nut	2	X	X	X
5≡	HMVV3M	. Bearing: Rod End	2	X	X	X
6†	G08DU	. Washer	2	X	X	X
–†	4164004-11	. Bellcrank	1	X	X	X
8*	4164004-13	. Bellcrank	1	X	X	X
9†	NAS6203-14D	. Bolt	2	X	X	X
10●	NAS1149F0332P	. Washer	7	X	X	X
10†	AN960-10L	. Washer (Superseded by NAS1149F0332P)	7	X	X	X
11†	MS17826-3	. Nut	6	X	X	X
12†	MS24665-153	. Cotter Pin	6	X	X	X
13†	NAS6203-9D	. Bolt	3	X	X	X
14*	4164002-1	. Control Tube Assembly	1	X	X	X
15	AN315-3L	. . Nut	1	X	X	X
16≡	HMLVV3M	. . Bearing: Rod End	1	X	X	X
17	AN315-3R	. . Nut	1	X	X	X
18≡	HMVV3M	. . Bearing: Rod End	1	X	X	X
19	2523184	. Throttle Arm	1	X	X	X
20**	AN365-524A	. Nut	1	X	X	X
21	NAS6203-10D	. Bolt	1	X	X	X
22	28-164043-11	. Bushing	1	X	X	X
22	4167360-17	. Bushing (Alternate)	1	X	X	X
23●	NAS1149C0332R	. Washer	2	X	X	X
23	AN960C10L	. Washer (Superseded by NAS1149C0332R)	2	X	X	X
24	4164012-5	. Bracket Assembly	1	X	X	X
25**	AN960C10	. Washer	2	X	X	X
26**	AN104607	. Bolt	1	X	X	X
27**	AN104608	. Bolt	1	X	X	X
28	AN525-832R7	. Screw	2	X	X	X

* Used with optional dual controls. 480/480B only.

** Parts already installed on engine.

† See Figure 9-6 or 9-7.1. for complete collective installation.

UNCONTROLLED COPY WHEN DOWNLOADED OR PRINTED

Visit www.enstromhelicopter.com for instructions to order an original manual and to register for email notification of updates.

≡ See Appendix A for equivalent part information.

‡ Effectivity 480B S/N 5216 and subsequent. Retrofittable to 480B S/N 5042 and subsequent. 3SNE094A-72 throttle cable is an acceptable alternate.

● Effectivity 480B S/N 5223 and subsequent. Retrofittable to 480 S/N 5001 – 5041, 480B S/N 5042 and subsequent.

UNCONTROLLED COPY WHEN DOWNLOADED OR PRINTED

Visit www.enstromhelicopter.com for instructions to order an original manual and to register for email notification of updates.

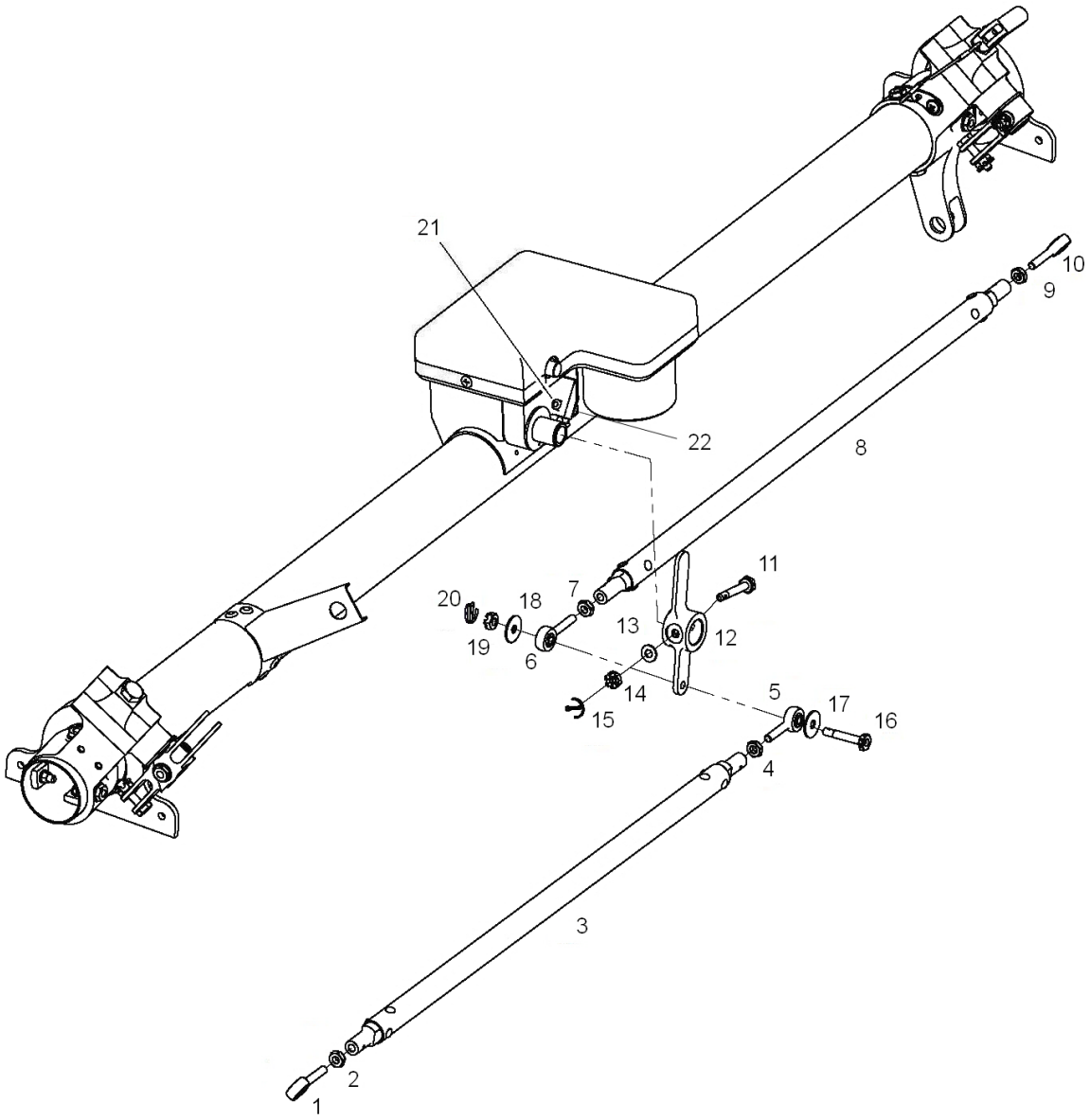

FIGURE 6-7 ENGINE IDLE STOP ASSEMBLY

UNCONTROLLED COPY WHEN DOWNLOADED OR PRINTED

Visit www.enstromhelicopter.com for instructions to order an original manual and to register for email notification of updates.

FIGURE 6-7 ENGINE IDLE STOP ASSEMBLY

ITEM NUMBER	PART NUMBER	DESCRIPTION	QTY PER ASSY	EFFECTIVITY		
				TH-28	480	480B
1≡	HMVV3M	. Bearing: Rod End, RH	1			X
1≡	HM3M	. Bearing: Rod End, RH (Alternate)	1			X
2	AN315-3R	. Nut	1			X
3	4167372-1	. Control Rod	1			X
4	AN315-3L	. Nut	1			X
5≡	HMLVV3M	. Bearing: Rod End, LH	1			X
5≡	HML3M	. Bearing: Rod End, LH (Alternate)	1			X
6≡	HMLVV3M	. Bearing: Rod End, LH	1			X
6≡	HML3M	. Bearing: Rod End, LH (Alternate)	1			X
7	AN315-3l	. Nut	1			X
8	4167372-1	. Control Rod	1			X
9	AN315-3R	. Nut	1			X
10≡	HMVV3M	. Bearing: Rod End, RH	1			X
10≡	HM3M	. Bearing: Rod End, RH (Alternate)	1			X
11	NAS6203-14D	. Bolt	1			X
12	4167371-33	. Bellcrank	1			X
13	AN960-10L	. Washer	1			X
14	MS17826-3	. Nut	1			X
15	MS24665-153	. Cotter Pin	1			X
16	NAS6203-13D	. Bolt	1			X
17	C145712	. Washer	1			X
18	C145712	. Washer	1			X
19	MS17826-3	. Nut	1			X
20	MS24665-153	. Cotter Pin	1			X
21	MS18066-69	. Fixed Idle Stop	1			X
22	AN316-4R	. Stop Nut	1			X

UNCONTROLLED COPY WHEN DOWNLOADED OR PRINTED

Visit www.enstromhelicopter.com for instructions to order an original manual and to register for email notification of updates.

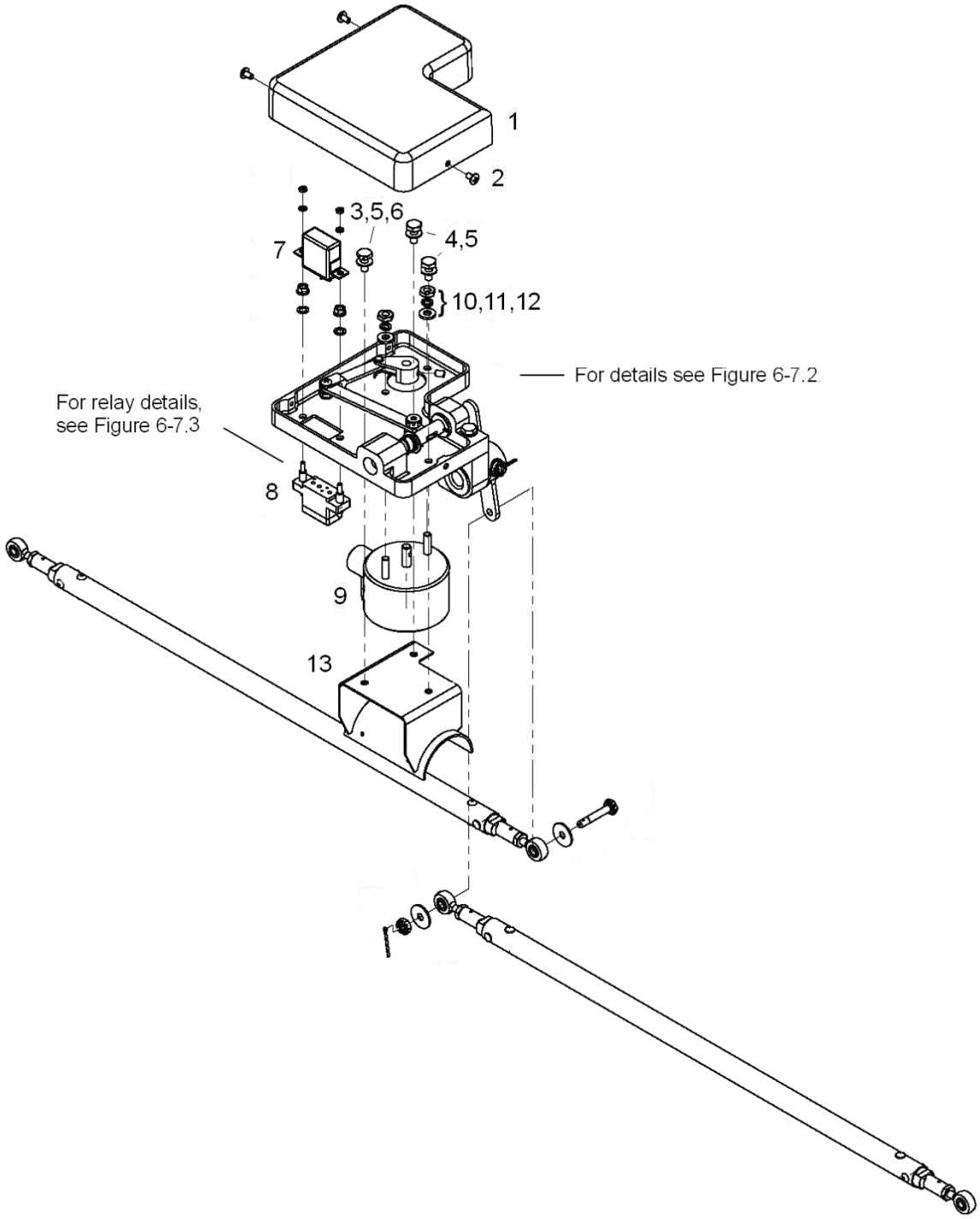

See Figures 6-7, 6-7.2, and 6-7.3 for complete installation.

FIGURE 6-7.1 ENGINE IDLE STOP ASSEMBLY – DUAL START CONTROL

UNCONTROLLED COPY WHEN DOWNLOADED OR PRINTED

Visit www.enstromhelicopter.com for instructions to order an original manual and to register for email notification of updates.

FIGURE 6-7.1 ENGINE IDLE STOP ASSEMBLY – DUAL START CONTROL

ITEM NUMBER	PART NUMBER	DESCRIPTION	QTY PER ASSY	EFFECTIVITY		
				TH-28	480	480B
–	4167370-7	Push Pull Rod Assembly w/Stop	1			X
–	4167370-1	Push Pull Rod, Dual Start Control (Inactive)	1			X
1	4167374-11	. Cover	1			X
2	AN526-632R4	. Screw	3			X
3	AN3H3A	. Bolt	1			X
4	4167371-19	. Bolt	1			X
5	AN960-10L	. Washer	1			X
6	MS20995-C25	. Lock Wire	1			X
7*	JC-D4N-300L	. Relay	1			X
8*	SO-0163-9033	. Relay Socket	1			X
9	4167370-3	. Solenoid	1			X
10	AN345-10	. Nut	2			X
11	AN935-10	. Lock Washer	2			X
12	AN960-10	. Washer	2			X
13	4167373-1	. Bracket	1			X

* Mounting hardware is provided with these components.

UNCONTROLLED COPY WHEN DOWNLOADED OR PRINTED

Visit www.enstromhelicopter.com for instructions to order an original manual and to register for email notification of updates.

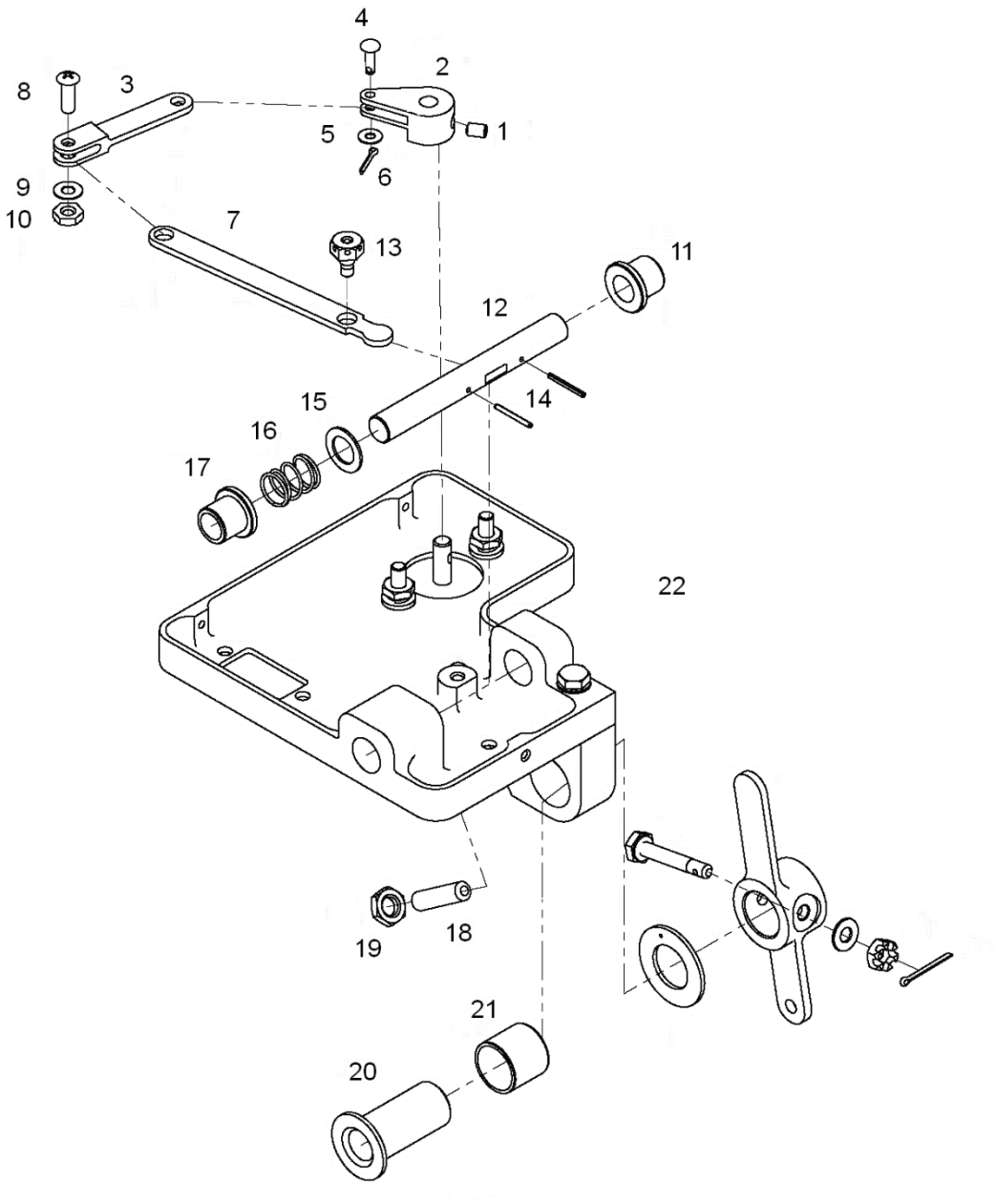

See Figures 6-7, 6-7.1, and 6-7.3 for complete installation.

FIGURE 6-7.2 ENGINE IDLE STOP ASSEMBLY – DUAL START CONTROL DETAIL

UNCONTROLLED COPY WHEN DOWNLOADED OR PRINTED

Visit www.enstromhelicopter.com for instructions to order an original manual and to register for email notification of updates.

FIGURE 6-7.2 ENGINE IDLE STOP ASSEMBLY – DUAL START CONTROL DETAIL

ITEM NUMBER	PART NUMBER	DESCRIPTION	QTY PER ASSY	EFFECTIVITY		
				TH-28	480	480B
1	8-32X1/4in	. . Cup Point Set Screw	1			X
2*	4167371-37	. . Pivot Arm	1			X
2	4167371-17	. . Pivot Arm (Superseded by 4167371-37)	1			X
3	4167371-3	. . Arm Assembly	1			X
4	MS20392-1C9	. . Clevis Pin	1			X
4	MS20392-1C11	. . Clevis Pin (Alternate)	1			X
5	AN960-4L	. . Washer	1			X
6	MS24665-1010	. . Cotter Pin	1			X
7	4167371-1	. . Arm Assembly	1			X
8	AN515-8R8	. . Screw	1			X
9	4167371-21	. . Bushing	2			X
10	AN9608L	. . Nut	1			X
11	4167371-31	. . Bearing	1			X
12	4167371-25	. . Stop Shaft	1			X
13	4167371-19	. . Hex Bolt	1			X
14	MS16562-196	. . Roll Pins	1			X
15	AN960-616L	. . Washer	1			X
16	71478S	. . Spring	1			X
17	4167371-31	. . Bearing	1			X
18	MS18066-69	. . Set Screw	1			X
19	AN316-4R	. . Jam Nut	1			X
20	4164006-11	. . Sleeve	1			X
21	10-DU-10	. . DU Bushing	1			X
22	4167373-1	. . Mounting Bracket	1			X

* Effectivity 480B S/N 5246 and subsequent. Retrofittable to 480B S/N 5042 and subsequent.

UNCONTROLLED COPY WHEN DOWNLOADED OR PRINTED

Visit www.enstromhelicopter.com for instructions to order an original manual and to register for email notification of updates.

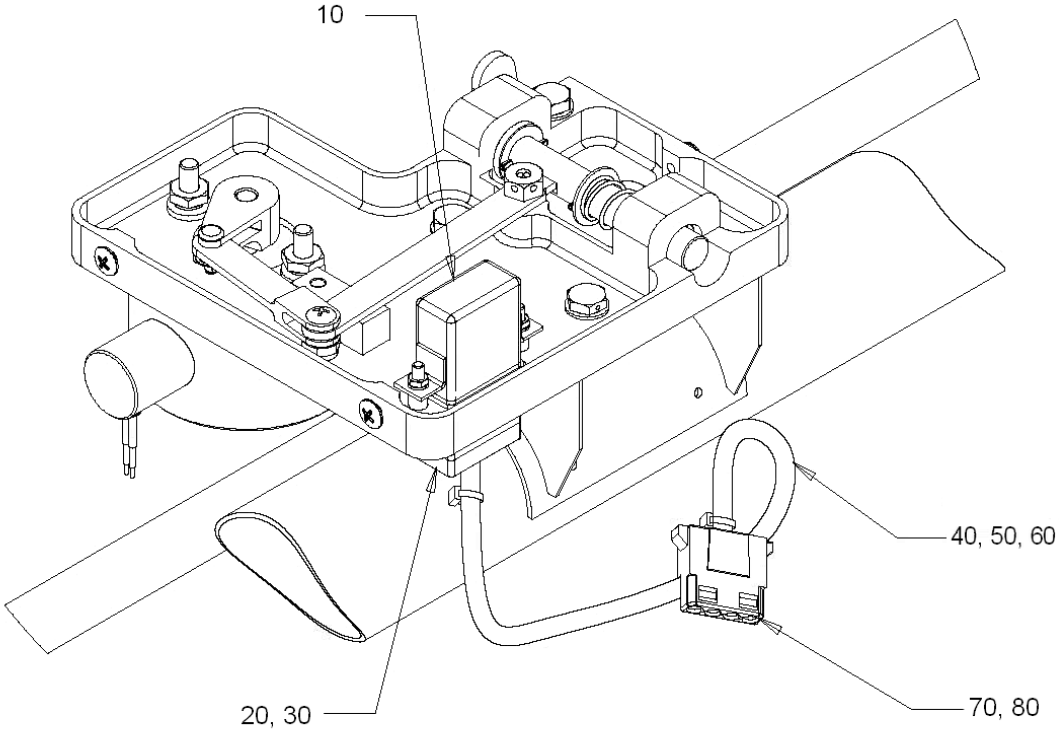

See Figures 6-7, 6-7.1, and 6-7.2 for complete installation.

FIGURE 6-7.3 ENGINE IDLE STOP ASSY – DUAL START CONTROL - RELAY DETAIL

UNCONTROLLED COPY WHEN DOWNLOADED OR PRINTED

Visit www.enstromhelicopter.com for instructions to order an original manual and to register for email notification of updates.

FIGURE 6-7.3 ENGINE IDLE STOP ASSEMBLY – DUAL START CONTROL - RELAY DETAIL

ITEM NUMBER	PART NUMBER	DESCRIPTION	QTY PER ASSY	EFFECTIVITY		
				TH-28	480	480B
10*	JC-D4N-300L	. Relay	1			X
20*	SO-0163-9033	. Relay Socket	1			X
30	M39029/92-536	. Contact Pin	2			X
40	4192514-71	. Solenoid Idle Stop Harness	1			X
50	SE25PFR-MR0	. Braided Expandable Sleeve	18”			X
60	SST1M-MP	. Cable Tie	A/R			X
70	1-480424-0	. Socket Housing	1			X
80	60607-1	. Socket	4			X

* Mounting hardware is provided with these components.

UNCONTROLLED COPY WHEN DOWNLOADED OR PRINTED

Visit www.enstromhelicopter.com for instructions to order an original manual and to register for email notification of updates.

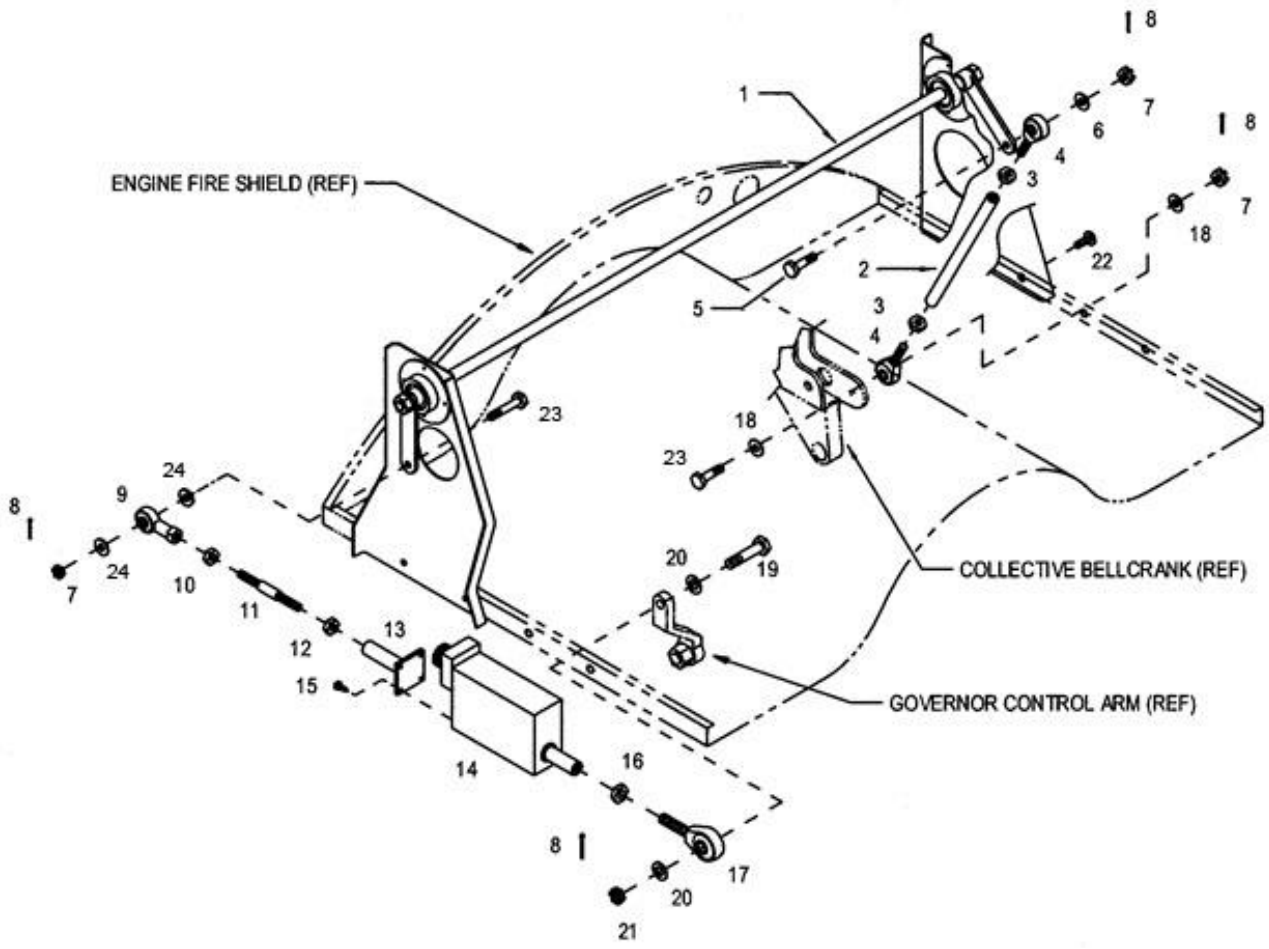

FIGURE 6-8. DROOP COMPENSATOR INSTALLATION

UNCONTROLLED COPY WHEN DOWNLOADED OR PRINTED

Visit www.enstromhelicopter.com for instructions to order an original manual and to register for email notification of updates.

FIGURE 6-8. DROOP COMPENSATOR INSTALLATION

ITEM NUMBER	PART NUMBER	DESCRIPTION	QTY PER ASSY	EFFECTIVITY		
				TH-28	480	480B
–	4164015-1	Install N2 Compensator	REF	X	X	X
1	4164015-902	. Rod & Bearing Assembly, N_2	1	X	X	X
2	4164014-103	. Rod Assy-N2 Compensator	1	X	X	X
3	AN315-3R	. . Nut	2	X	X	X
4≡	HMVV3M	. . Bearing: Rod End	2	X	X	X
5	NAS6203-7D	. Bolt	1	X	X	X
6**	NAS1149C0332R	. Washer	1		X	X
6	AN960C10L	. Washer (Superseded by NAS1149C0332R)	A/R	X	X	X
6	AN960C10	. Washer (Superseded by NAS1149C0363R)	A/R	X	X	X
7	MS17826-3	. Nut	3	X	X	X
8	MS24665-88	. Cotter Pin	4	X	X	X
8	MS24665-105	. Cotter Pin (Superseded by MS24665-88)	4	X	X	X
–	4164015-901	. Linear Actuator Assembly	1	X	X	X
9≡	HFLVV3M	. . Bearing: Rod End	1	X	X	X
10	AN315-3R	. . Nut	1	X	X	X
11	4164014-29	. . Control Rod	1	X	X	X
12	AN315-3L	. . Nut	1	X	X	X
13	4164014-17	. . End Fitting	1	X	X	X
14	8618M25	. . Linear Actuator	1	X	X	X
15*	MS35206-325	. . Screw	4	X	X	X
16	AN316-4	. Nut	1	X	X	X
17≡	HMVV4M	. Bearing: Rod End	1	X	X	X
18**	NAS1149D0316H	. Washer (Under nut)	1		X	X
18	AN960D10L	. Washer (Superseded by NAS1149D0316H)	A/R	X	X	X
18**	NAS1149D0363H	. Washer (Under Bolt Head)	1		X	X
18	AN960D10	. Washer (Superseded by NAS1149D0363H)	A/R	X	X	X
19	NAS6204-11D	. Bolt	1	X	X	X
20**	NAS1149C0432R	. Washer	2		X	X
20	AN960C416L	. Washer (Superseded by NAS1149C0432R)	2	X	X	X
21	MS17826-4	. Nut	1	X	X	X
22	AN525-832R7	. Screw	4	X	X	X
23	NAS6203-8D	. Bolt	2		X	X
24**	NAS1149C0363R	. Washer	2		X	X

UNCONTROLLED COPY WHEN DOWNLOADED OR PRINTED

Visit www.enstromhelicopter.com for instructions to order an original manual and to register for email notification of updates.

≡ See Appendix A for equivalent part information.

* Use existing mounting hardware from P/N 8618M25 actuator.

** Effectivity 480B S/N 5193 and subsequent. Retrofittable to 480 S/N 5001 – 5041, 480B S/N 5042 and subsequent.

UNCONTROLLED COPY WHEN DOWNLOADED OR PRINTED

Visit www.enstromhelicopter.com for instructions to order an original manual and to register for email notification of updates.

INTENTIONALLY LEFT BLANK

UNCONTROLLED COPY WHEN DOWNLOADED OR PRINTED

Visit www.enstromhelicopter.com for instructions to order an original manual and to register for email notification of updates.

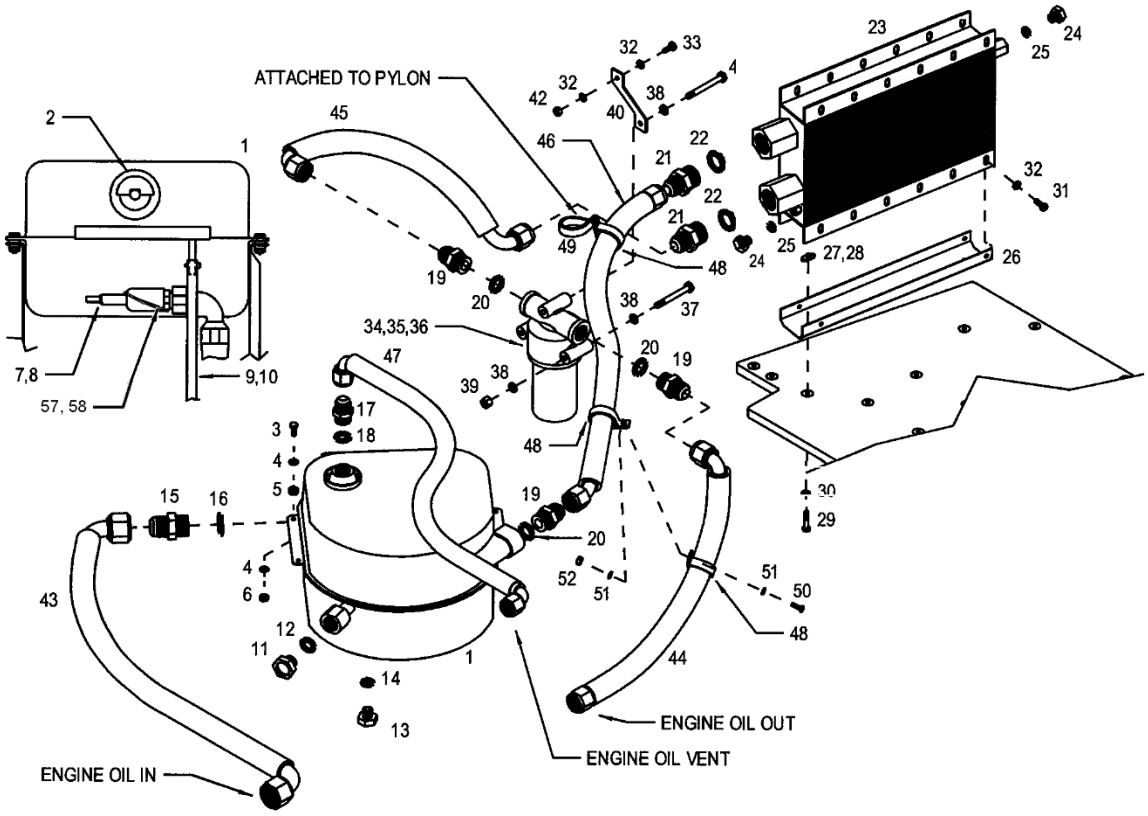

Sheet 1 of 2

FIGURE 6-9. ENGINE OIL SYSTEM

UNCONTROLLED COPY WHEN DOWNLOADED OR PRINTED

Visit www.enstromhelicopter.com for instructions to order an original manual and to register for email notification of updates.

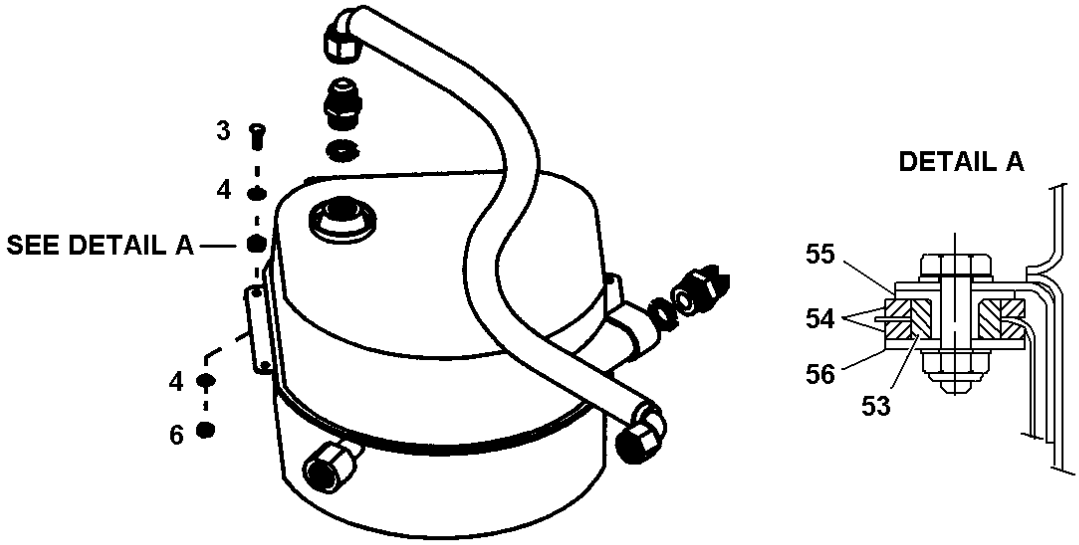

480B: S/N 5088 and subsequent

Sheet 2 of 2

FIGURE 6-9. ENGINE OIL SYSTEM

UNCONTROLLED COPY WHEN DOWNLOADED OR PRINTED

Visit www.enstromhelicopter.com for instructions to order an original manual and to register for email notification of updates.

FIGURE 6-9. ENGINE OIL SYSTEM

ITEM NUMBER	PART NUMBER	DESCRIPTION	QTY PER ASSY	EFFECTIVITY		
				TH-28	480	480B
–	4129100-9	Oil Cooling System	REF			X
–	4129100-902	Oil Cooling System	REF			X
1	206-061-505-003	. Oil Tank (Used with 4129100-7)	1	X	X	X
1●	ECD4074-5	. Oil Tank (Used with 4129100-902)	1			X
1+●	ECD4074-1	. Oil Tank (Used with 4129100-902) Acceptable alternative to ECD4074-5	1			X
2	436-19	. . Cap Assembly (Used with ECD4074-1)	1	X	X	X
–	MS29561-226	. . . O-Ring	1	X	X	X
–	3519-6	. . . Chain	1	X	X	X
–	416-13	. . . Hook	2	X	X	X
3	AN3-4A	. Bolt	4	X	X	X
3	AN3-6A	. Bolt (Used with 4129100-9)	1	X	X	X
4	AN960-10L	. Washer	8	X	X	X
4	AN960-10	. Washer (Used with 4129100-9)	1	X	X	X
5	AN931-3-5	. Grommet	4	X	X	X
6	AN365-1032A	. Nut	4	X	X	X
7	MS28034-3	. Temperature Probe	1	X	X	X
8	MS28778-4	. O-Ring	1	X	X	X
9●●	K010406	. Drain Hose	1	X	X	X
9●	4129100-11	. Drain Hose (Superseded by K010406)	1	X	X	X
10	SST1.5I-MP	. Cable Tie	1	X	X	X
11	AN814-8DL	. Plug	1	X	X	X
12	MS28778-8	. O-Ring	1	X	X	X
13	AN814-6DL	. Plug	1	X	X	X
14	MS28778-6	. O-Ring	1	X	X	X
15††	4129054-29	. Fitting Assembly	1		X	X
15‡	4129054-25	. Fitting Assembly (Superseded by 4129054-29	1	X	X	X
15●●	4129054-13	. Fitting Assembly (Superseded by 4129054-25)	1	X	X	X
15●	4129054-3	. Fitting Assembly (Superseded by 4129054-13)	1	X	X	X
16	MS28778-12	. . O-Ring	1	X	X	X
17††	4129054-31	. Fitting Assembly	1		X	X
17●●	4129054-17	. Fitting Assembly (Superseded by 4129054-31)	1	X	X	X
17●	4129054-7	. Fitting Assembly (Superseded by 4129054-17)	1	X	X	X

UNCONTROLLED COPY WHEN DOWNLOADED OR PRINTED

Visit www.enstromhelicopter.com for instructions to order an original manual and to register for email notification of updates.

FIGURE 6-9. ENGINE OIL SYSTEM

ITEM NUMBER	PART NUMBER	DESCRIPTION	QTY PER ASSY	EFFECTIVITY		
				TH-28	480	480B
18	MS28778-8	. . O-Ring	1	X	X	X
19††	4129054-33	. Fitting Assembly	3		X	X
19●●	4129054-19	. Fitting Assembly (Superseded by 412054-33)	3	X	X	X
19●*	4129054-9	. Fitting Assembly (Superseded by 4129054 -19)	3	X	X	X
20	MS28778-10	. . O-Ring	3	X	X	X
21††	4129054-35	. Fitting Assembly	2		X	X
21●●	4129054-11	. Fitting Assembly (Superseded by 4129054-35)	2	X	X	X
21●	4129054-1	. Fitting Assembly (Superseded by 4129054 -11)	2	X	X	X
22	MS28778-12	. . O-Ring	2	X	X	X
23	6502-12	. Heat Exchanger	1	X	X	X
24	AN814-4DL	. Plug	2	X	X	X
25	MS28778-4	. O-Ring	2	X	X	X
26	4129112-11	. Channel	1	X	X	X
27	NAS1068-A3	. . Nut Plate	6	X	X	X
28	MS20426AD3-2	. . Rivet	12	X	X	X
29	AN3-7A	. Bolt	2	X	X	X
30	AN960D10	. Washer	2	X	X	X
31	AN3-4A	. Bolt	4	X	X	X
32	NAS620-10	. Washer	8	X	X	X
33	AN3-5A	. Bolt	1	X	X	X
34	AD-B283101	. Oil Filter Assembly (APM)	1	X	X	X
35	AC-B283F-107	. . Filter Element	1	X	X	X
36	M83248/1-138	. . O-Ring	1	X	X	X
34**	1740001-01	. Oil Filter Assembly (Purolator/Facet) Fittings supplied with filter.	1	X	X	X
35	038088-08	. . Filter Element	1	X	X	X
35	038088-08-80	. . Filter Element (Alternate)	1	X	X	X
–	1741125	. . Seal Kit	1	X	X	X
37	AN4-21A	. Bolt	2	X	X	X
38†	AN960D416	. Washer	A/R	X	X	X
39	AN365-428A	. Nut	3	X	X	X
40	4129124-11	. Bracket	1	X	X	X
41	AN4-22A	. Bolt	1	X	X	X
42	AN365-1032A	. Nut	1	X	X	X

UNCONTROLLED COPY WHEN DOWNLOADED OR PRINTED

Visit www.enstromhelicopter.com for instructions to order an original manual and to register for email notification of updates.

FIGURE 6-9. ENGINE OIL SYSTEM

ITEM NUMBER	PART NUMBER	DESCRIPTION	QTY PER ASSY	EFFECTIVITY		
				TH-28	480	480B
43	ECD4034-7	. Oil Line Assembly	1	X	X	X
44	ECD4034-3	. Oil Line Assembly	1	X	X	X
45	ECD4034-1	. Oil Line Assembly	1	X	X	X
46	ECD4034-5	. Oil Line Assembly	1	X	X	X
47	ECD4034-9	. Oil Line Assembly	1	X	X	X
48	MS21919WF18	. Clamp	3	X	X	X
49	MS21919WF14	. Clamp	1	X	X	X
50	AN525-8R7	. Screw	2	X	X	X
51	AN960-8L	. Washer	4	X	X	X
52	AN364-832A	. Nut	2	X	X	X
53	4129136-11	. Isolator	4	X	X	X
54	4129136-13	. Isolator	8	X	X	X
55	4129136-15	. Flanged Spacer	4	X	X	X
56	AN370-3	. Washer	1	X	X	X
57‡	MS20995C32	. Wire: Safety	A/R		X	X
58‡	FIT-221V-1/8	. Shrink Tubing	A/R		X	X

+ Production effectivity 480B, 5088 and subsequent. Retrofittable to all TH-28/480/480B serial numbers.

* Only one (1) fitting is required when oil filter assembly, P/N 1740001-01, is installed.

** Production effectivity TH-28, S/N 3007 & subsequent; 480B, S/N 5044 and subsequent.

† Used as shims.

● Effectivity, 480B S/N 5060 and subsequent. Retrofittable to all TH-28/480/480B serial numbers.

●● Effectivity, 480B S/N 5143 and subsequent.

‡ Effectivity 480B S/N 5155 and subsequent. Retrofittable to 480 S/N 5001 and 480B S/N 5042.

†† Effectivity 480B S/N 5194 and subsequent. Retrofittable to 480 S/N 5001 – 5041 and S/N 5042 and subsequent.

UNCONTROLLED COPY WHEN DOWNLOADED OR PRINTED

Visit www.enstromhelicopter.com for instructions to order an original manual and to register for email notification of updates.

INTENTIONALLY LEFT BLANK

UNCONTROLLED COPY WHEN DOWNLOADED OR PRINTED

Visit www.enstromhelicopter.com for instructions to order an original manual and to register for email notification of updates.

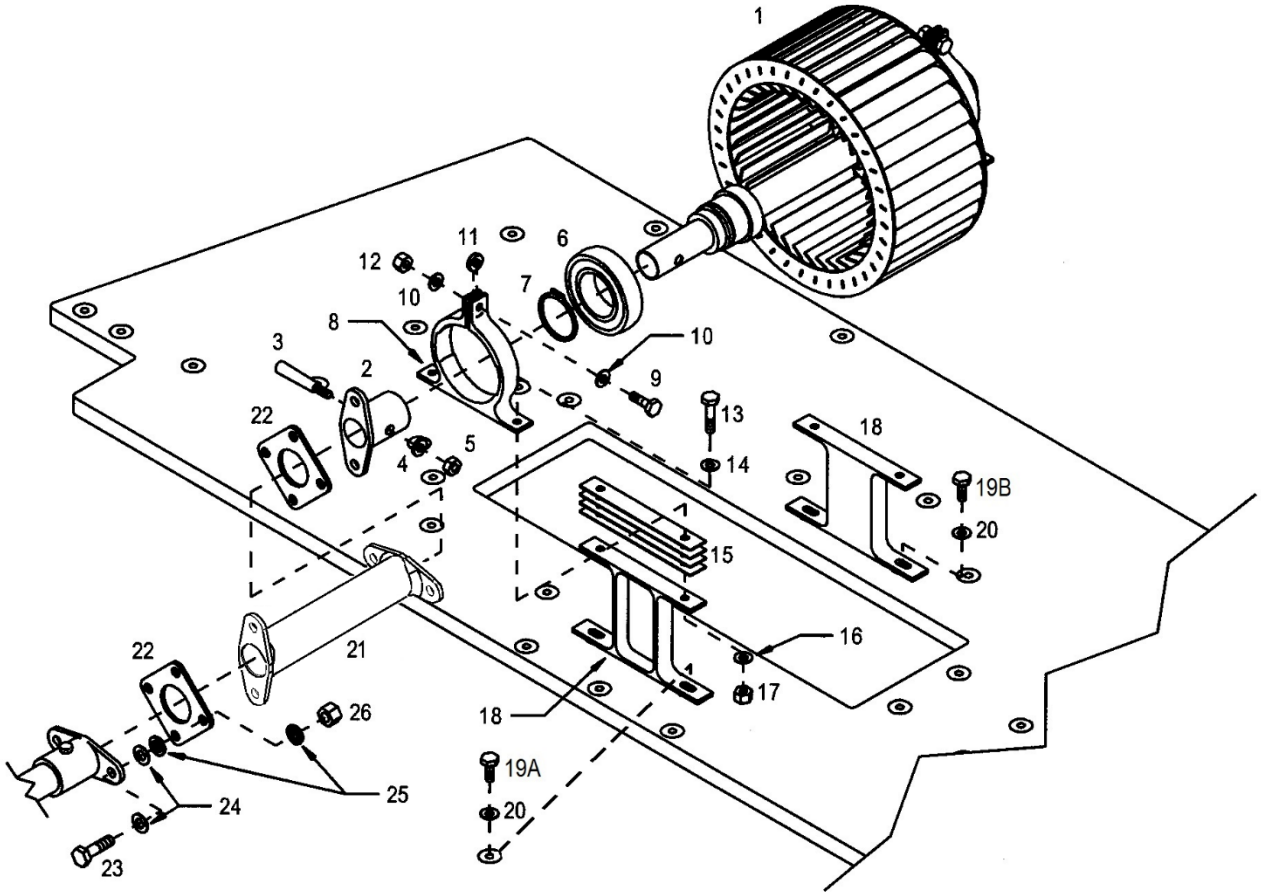

FIGURE 6-10. OIL COOLER BLOWER INSTALLATION

UNCONTROLLED COPY WHEN DOWNLOADED OR PRINTED

Visit www.enstromhelicopter.com for instructions to order an original manual and to register for email notification of updates.

FIGURE 6-10. OIL COOLER BLOWER INSTALLATION

ITEM NUMBER	PART NUMBER	DESCRIPTION	QTY PER ASSY	EFFECTIVITY		
				TH-28	480	480B
–	4129101-905	. Impeller Shaft Assembly (Externally mounted drive coupling) Superseded by 4129101-9	1	X	X	
–*	4129101-9	. Impeller Shaft Assembly (A/C Equipped) Internally mounted drive coupling .	1	X	X	X
–**	4129101-907	. Impeller Shaft Assembly (A/C Equipped) Externally mounted drive coupling (Superseded by 4129101-101)	1		X	
–	4129101-101	. Impeller Shaft Assembly (A/C Equipped) Internally mounted drive coupling (Superseded by 4129101-105)	1		X	
–+	4129101-105	. Impeller Shaft Assembly (A/C Equipped) Internally mounted drive coupling. Preferred Part.	1	X	X	X
–	4129101-103	. Impeller Shaft Assembly (A/C Equipped) Internally mounted drive coupling (Alternate for 4129101-105)	1	X	X	X
1	4129101-5	. . Impeller Shaft Assembly (4129101-905)	1	X	X	
1	4129129-1	. . Impeller Shaft Assembly (4129101-9)	1	X	X	X
1	4129101-7	. . Impeller Shaft Assembly (4129101-907)	1		X	
1	4129129-3	. . Impeller Shaft Assembly (4129101-101)	1		X	
1	4129129-5	. . Impeller Shaft Assembly (4129101-103, -105)	1	X	X	X
2	4129126-13	. . . Coupling (4129101-905, -907)	1	X	X	
2	4129126-15	. . . Coupling (4129101-9, -101, -103 ,-105)	1	X	X	X
3	AN386-2-9A	. . . Taper Pin (4129101-905, -907)	1	X	X	
3±	4130541-11	. . . Taper Pin (Alternate to AN386-2-9A)	1	X	X	
3±	4130541-13	. . . Taper Pin (Alternate to AN386-2-9A)	1	X	X	
3◄	4130541-15	. . . Taper Pin (Oversize Ø.3742 in)	1		X	X
3◄	4130541-17	. . . Taper Pin (Oversize Ø.3842 in)	1		X	X
3	AN386-2-8A	. . . Taper Pin (4129101-9, -103, -105)	1	X	X	X
3	AN386-2-8A	. . . Taper Pin (4129101-101)	2		X	
4	AN960-10	. . . Washer (4129101-905, -907, -9, -103, -105)	1	X	X	X
4	AN960-10	. . . Washer (4129101-101)	2		X	
4	AN975-3	. . . Washer, Taper Pin	A/R	X	X	X
5	AN364-1032A	. . . Nut (4129101-905, -907,-9, -103, -105)	1	X	X	X
5	AN364-1032A	. . . Nut (4129101-101)	2		X	
6	ECD4011-13	. . Bearing	2	X	X	X
7	N5100-118	. . Retaining Ring	2	X	X	X
8	4129103-11	. . Bearing Housing	2	X	X	X

UNCONTROLLED COPY WHEN DOWNLOADED OR PRINTED

Visit www.enstromhelicopter.com for instructions to order an original manual and to register for email notification of updates.

FIGURE 6-10. OIL COOLER BLOWER INSTALLATION

ITEM NUMBER	PART NUMBER	DESCRIPTION	QTY PER ASSY	EFFECTIVITY		
				TH-28	480	480B
9	AN3-5A	. . Bolt	2	X	X	X
10	NAS1149F0332P	. . Washer	4	X	X	X
11	4129119-11	. . Spacer	2	X	X	X
12	MS21044N3	. . Nut	2	X	X	X
13	AN3-7A	. Bolt	4	X	X	X
14	AN960-10L	. Washer	12	X	X	X
15	4129117-11	. Shim, .007"	A/R	X	X	X
15	4129117-13	. Shim, .020"	A/R	X	X	X
15	4129117-15	. Shim, .032"	A/R	X	X	X
15	4129117-17	. Shim, .063"	A/R	X	X	X
15	4129117-19	. Shim, .125"	A/R	X	X	X
15	4129117-21	. Shim, .250"	A/R	X	X	X
16	AN960-10	. Washer	A/R	X	X	X
16	AN960-10L	. Washer	A/R	X	X	X
17	AN365-1032A	. Nut	4	X	X	X
18	4129104-21	. Bearing Housing Support	2	X	X	X
19A	AN3-5A	. Bolt	2	X	X	X
19B	AN3-15A	. Bolt	2	X	X	X
20	AN960-10L	. Washer	4	X	X	X
21●●	4129102-13	. Short Shaft Assembly	1	X	X	X
21∆	4129102-15	. Short Shaft Assembly	1		X	
21†	4129102-105	. Short Shaft Assembly (Superseded by 4129102-13)	1	X	X	X
21	4129102-107	. Short Shaft Assembly (Superseded by 4129102-13)	1	X	X	X
22	28-01041-3	. Flex Pack	2	X	X	X
23	AN4-7A	. Bolt	8	X	X	X
24	AN960-416	. Washer	A/R	X	X	X
24	AN960-416L	. Washer	A/R	X	X	X
25	28-13621-13	. Flex Coupling Washer	16	X	X	X
26	AN365-428A	. Nut	8	X	X	X

* TH-28, S/N 3007 and subsequent; 480, S/N 5037 through 5041.

** 480, S/N 5022 only.

\+ 480, S/N 5042 and subsequent.

† 480, S/N 5001 only.

● Acceptable alternative on 480/480B S/N 5001 – 5060.

UNCONTROLLED COPY WHEN DOWNLOADED OR PRINTED

Visit www.enstromhelicopter.com for instructions to order an original manual and to register for email notification of updates.

	●●	480B, S/N 5156 and subsequent.
	±	On S/N 5148 and subsequent: If the hole for the taper pin is too deep, use 4130541-11 or 4130541-13 oversized taper pins.
	Δ	S/N 5001 only
▌	◄	Customer Service Use only: Eligibility TH-28/480/480B, all S/N.

UNCONTROLLED COPY WHEN DOWNLOADED OR PRINTED

Visit www.enstromhelicopter.com for instructions to order an original manual and to register for email notification of updates.

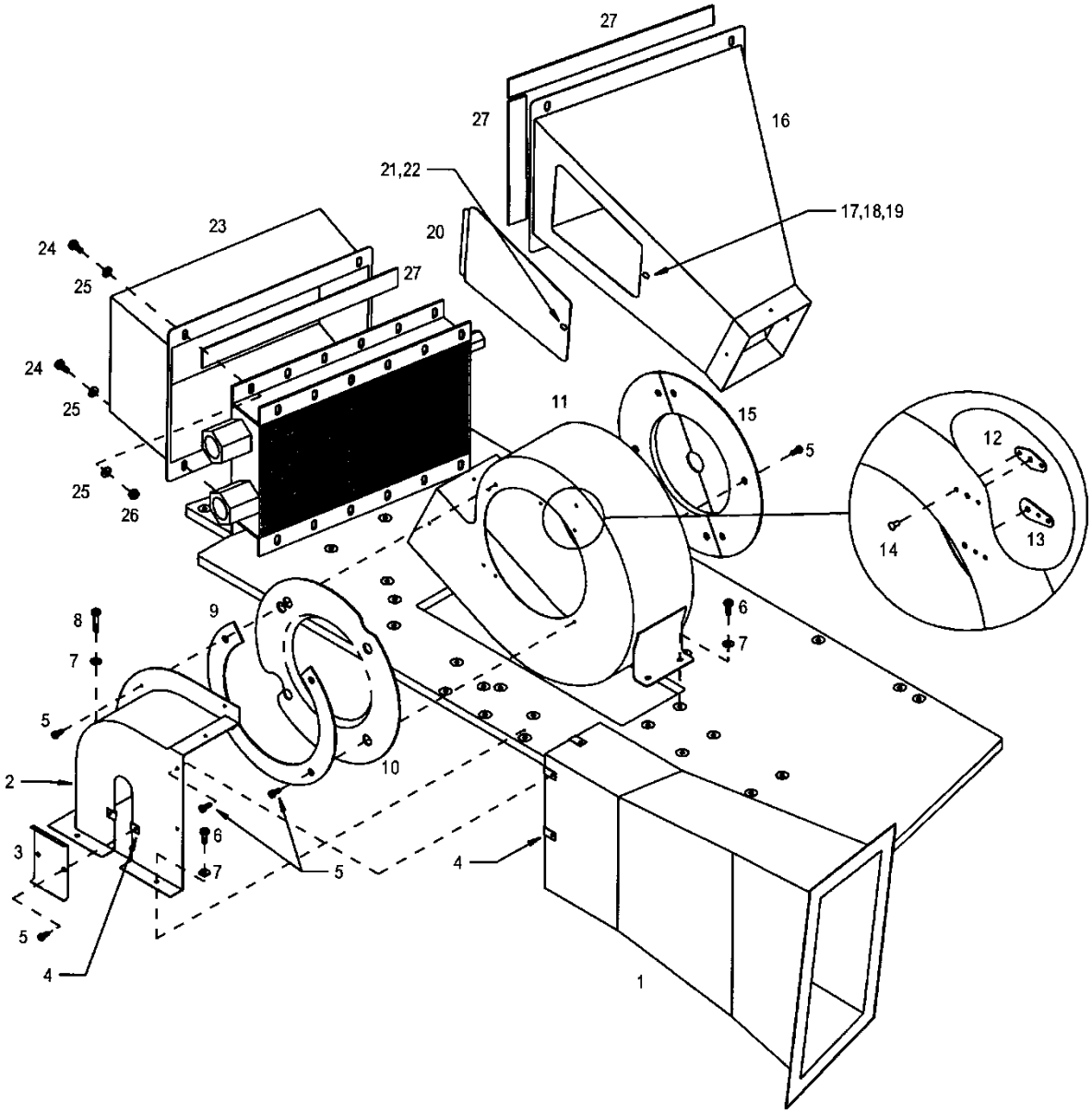

See Figure 6-10 for aircraft retrofitted with latest ducting configuration.

FIGURE 6-11. OIL COOLER DUCTING TH-28 SN 3006, 480 SN 5001-5022

UNCONTROLLED COPY WHEN DOWNLOADED OR PRINTED

Visit www.enstromhelicopter.com for instructions to order an original manual and to register for email notification of updates.

FIGURE 6-11. OIL COOLER DUCTING TH-28 SN 3006, 480 SN 5001-5022

ITEM NUMBER	PART NUMBER	DESCRIPTION	QTY PER ASSY	EFFECTIVITY		
				TH-28	480	480B
1	4129107-13	. Inlet Duct	1	X	X	
2	4129108-11	. Center Duct	1	X	X	
3	4129108-15	. Closeout	1	X	X	
4 ≡	A01787-8Z-1D	. Nut, Tinnerman	5	X	X	
5	AN503-8-6	. Screw	21	X	X	
6	MS27039-1-08	. Screw	9	X	X	
7	AN960-10L	. Washer	5	X	X	
8	MS27039-1-14	. Screw	1	X	X	
9	4129125-15	. Ring	1	X	X	
10	4129125-17	. Bell Mouth	1	X	X	
11	4129111-1	. Fan Shroud	1	X	X	
12 ≡	A06195-8Z-1D	. . Nut, Tinnerman	6	X	X	
13 ≡	A06194-8Z-1D	. . Nut, Tinnerman	12	X	X	
14	MS20426A3-3	. . Rivet	32	X	X	
15	4129125-11	. Plate	1	X	X	
16	4129121-1	. Exit Duct Assembly	1	X	X	
17	4129120-13	. . Shim	1	X	X	
18	1219-4200-Z3Y	. . Spring, Stud Fastener	1	X	X	
19	MS20426AD3-5	. . Rivet	2	X	X	
20	4129120-1	. . Cover Assembly	1	X	X	
21	AJW4-30	. . . Stud	1	X	X	
22	GA4-250	. . . Grommet	1	X	X	
23	4129113-1	. Exit Duct Assembly	1	X	X	
24	AN3-4A	. Bolt	8	X	X	
25	AN960-10L	. Washer	12	X	X	
26	AN364-1032A	. Nut	8	X	X	
27	4508-1	. Foam Tape	A/R	X	X	

≡ See Appendix A for equivalent part information.

UNCONTROLLED COPY WHEN DOWNLOADED OR PRINTED

Visit www.enstromhelicopter.com for instructions to order an original manual and to register for email notification of updates.

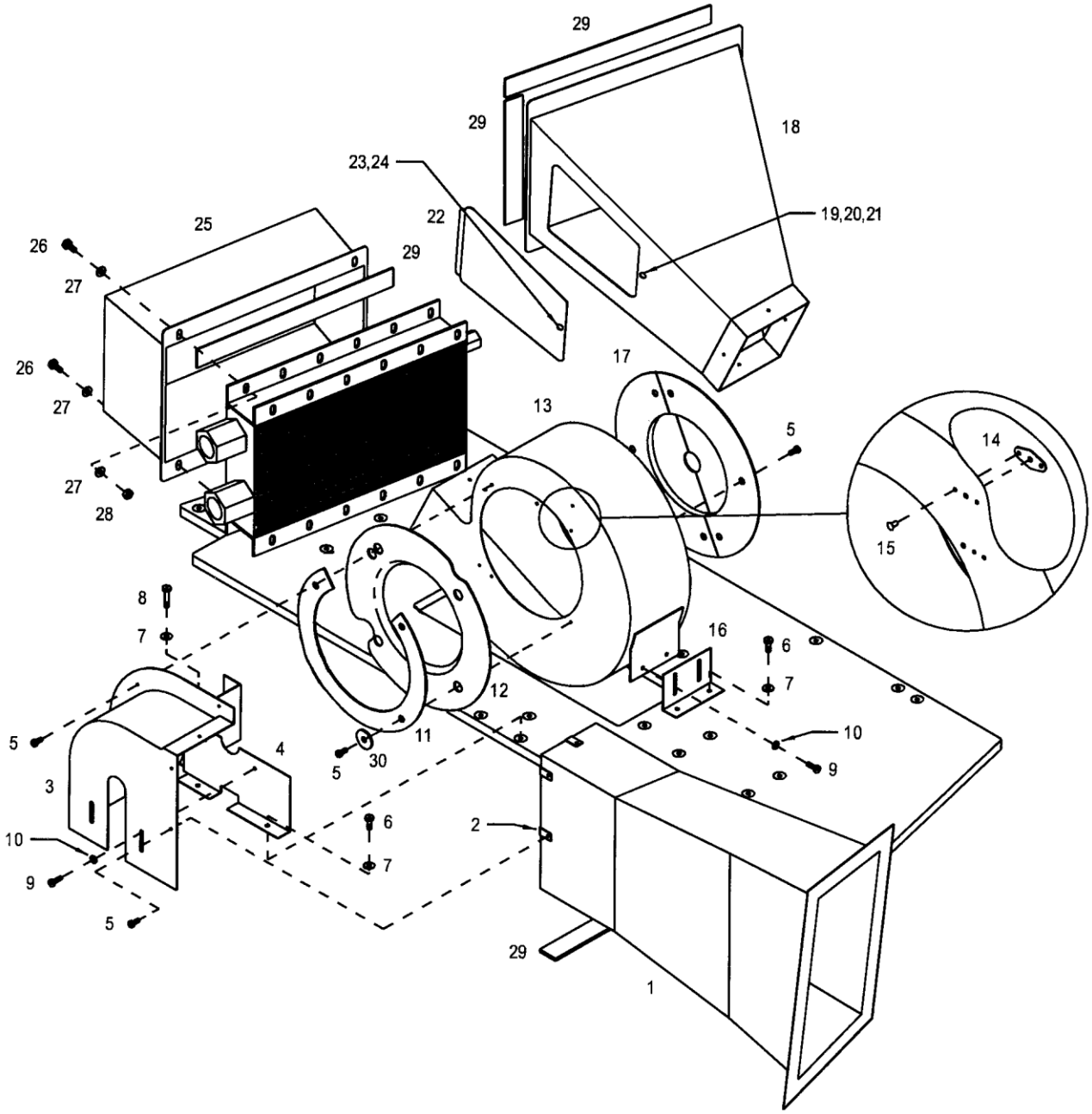

FIGURE 6-12. OIL COOLER DUCTING TH-28 S/N 3007, 480 S/N 5023 AND SUBS

UNCONTROLLED COPY WHEN DOWNLOADED OR PRINTED

Visit www.enstromhelicopter.com for instructions to order an original manual and to register for email notification of updates.

FIGURE 6-12. OIL COOLER DUCTING TH-28 S/N 3007, 480 S/N 5023 AND SUBS

ITEM NUMBER	PART NUMBER	DESCRIPTION	QTY PER ASSY	EFFECTIVITY		
				TH-28	480	480B
1	4129107-13	. Inlet Duct	1	X	X	X
2 ≡	A01787-8Z-1D	. Nut, Tinnerman	3	X	X	X
3	4129108-13	. Center Duct	1	X	X	X
4	4129116-1	. Flange Assembly	1	X	X	X
–	NAS686A08K	. . Nutplate	2	X	X	X
–	NAJ1-82	. . Nutplate (Superseded by NAS686A08K)	2	X	X	X
–	MS20426AD3-3.5	. . Rivet	4	X	X	X
–	MS20426AD3-3	. . Rivet (Superseded by MS20426AD3-3.5)	4	X	X	X
5	AN503-8-6	. Screw	19	X	X	X
6**	MS35207-263	. Screw: Machine (Phillips Pan Head), 10-32 X 0.500	4	X	X	X
6	MS27039-1-08	. Screw (Superseded by MS35207-263)	4	X	X	X
7	AN960-10L	. Washer	5	X	X	X
8	MS27039-1-14	. Screw	1	X	X	X
9**	MS35206-245	. Screw: Machine (Phillips Pan Head), 8-32 X 0.500	4	X	X	X
9	AN526-832R8	. Screw (Superseded By MS35206-245)	4	X	X	X
10	AN960-8L	. Washer	4	X	X	X
11	4129125-15	. Ring	1	X	X	X
12	4129125-17	. Bell Mouth	1	X	X	X
13	4129111-3	. Fan Shroud	1	X	X	X
14 ≡	A06195-8Z-1D	. . Nut, Tinnerman	16	X	X	X
15	MS20426A3-3	. . Rivet	32	X	X	X
16	4129118-15	. Angle	1	X	X	X
17	4129125-11	. Plate	1	X	X	X
18	4129121-1	. Exit Duct Assembly	1	X	X	X
19	4129120-13	. . Shim	1	X	X	X
20	1219-4200-Z3Y	. . Spring, Stud Fastener	1	X	X	X
21	MS20426AD3-5	. . Rivet	2	X	X	X
22	4129120-1	. . Cover Assembly	1	X	X	X
23	AJW4-30	. . . Stud	1	X	X	X
24	GA4-250	. . . Grommet	1	X	X	X
25	4129113-1	. Exit Duct Assembly	1	X	X	X
25*	4129113-3	. Exit Duct Assembly	1			X
26	AN3-4A	. Bolt	4	X	X	X
27	NAS620-10	. Washer	6	X	X	X
27	AN960-10L	. Washer (Superseded by NAS620-10)	12	X	X	X

UNCONTROLLED COPY WHEN DOWNLOADED OR PRINTED

Visit www.enstromhelicopter.com for instructions to order an original manual and to register for email notification of updates.

FIGURE 6-12. OIL COOLER DUCTING TH-28 S/N 3007, 480 S/N 5023 AND SUBS

ITEM NUMBER	PART NUMBER	DESCRIPTION	QTY PER ASSY	EFFECTIVITY		
				TH-28	480	480B
28	AN364-1032A	. Nut	4	X	X	X
29	4508-1	. Foam Tape	A/R	X	X	X
30	AN970-3	. Washer	3	X	X	X
30	1/4 Harper	. Washer, Flat (Alternate)	3	X	X	X

* Effective 480B, S/N 5114 and subsequent and 480B equipped with Increased Cooling Kit, P/N 4230031.

≡ See Appendix A for equivalent part information.

** Effectivity 480B S/N 5160 and subsequent. Retrofittable to 480 S/N 5001 to 5041 and 480B S/N 5042 and subsequent.

UNCONTROLLED COPY WHEN DOWNLOADED OR PRINTED

Visit www.enstromhelicopter.com for instructions to order an original manual and to register for email notification of updates.

INTENTIONALLY LEFT BLANK

UNCONTROLLED COPY WHEN DOWNLOADED OR PRINTED

Visit www.enstromhelicopter.com for instructions to order an original manual and to register for email notification of updates.

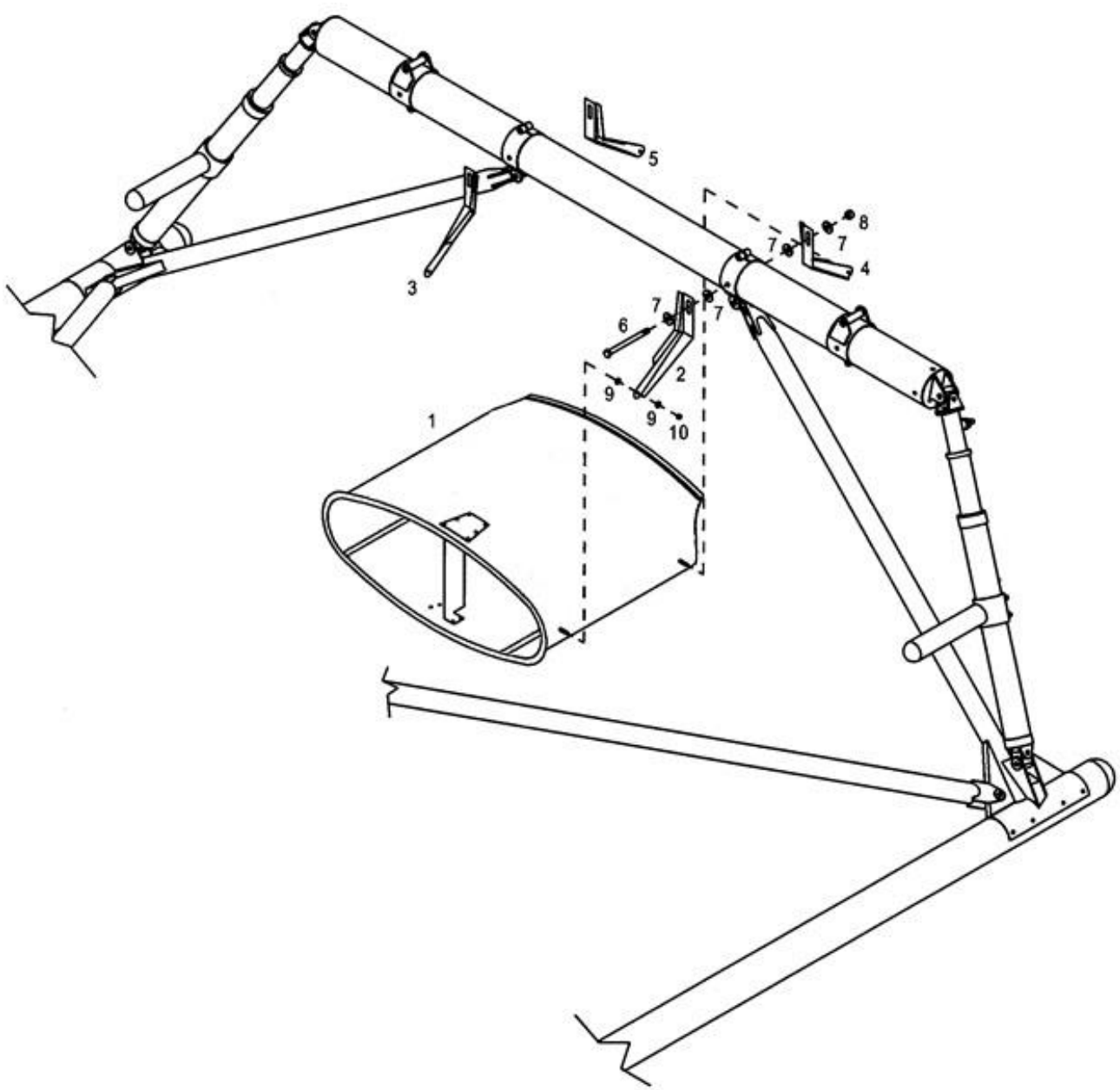

-9 Assembly

FIGURE 6-13. EDUCTOR INSTALLATION

UNCONTROLLED COPY WHEN DOWNLOADED OR PRINTED

Visit www.enstromhelicopter.com for instructions to order an original manual and to register for email notification of updates.

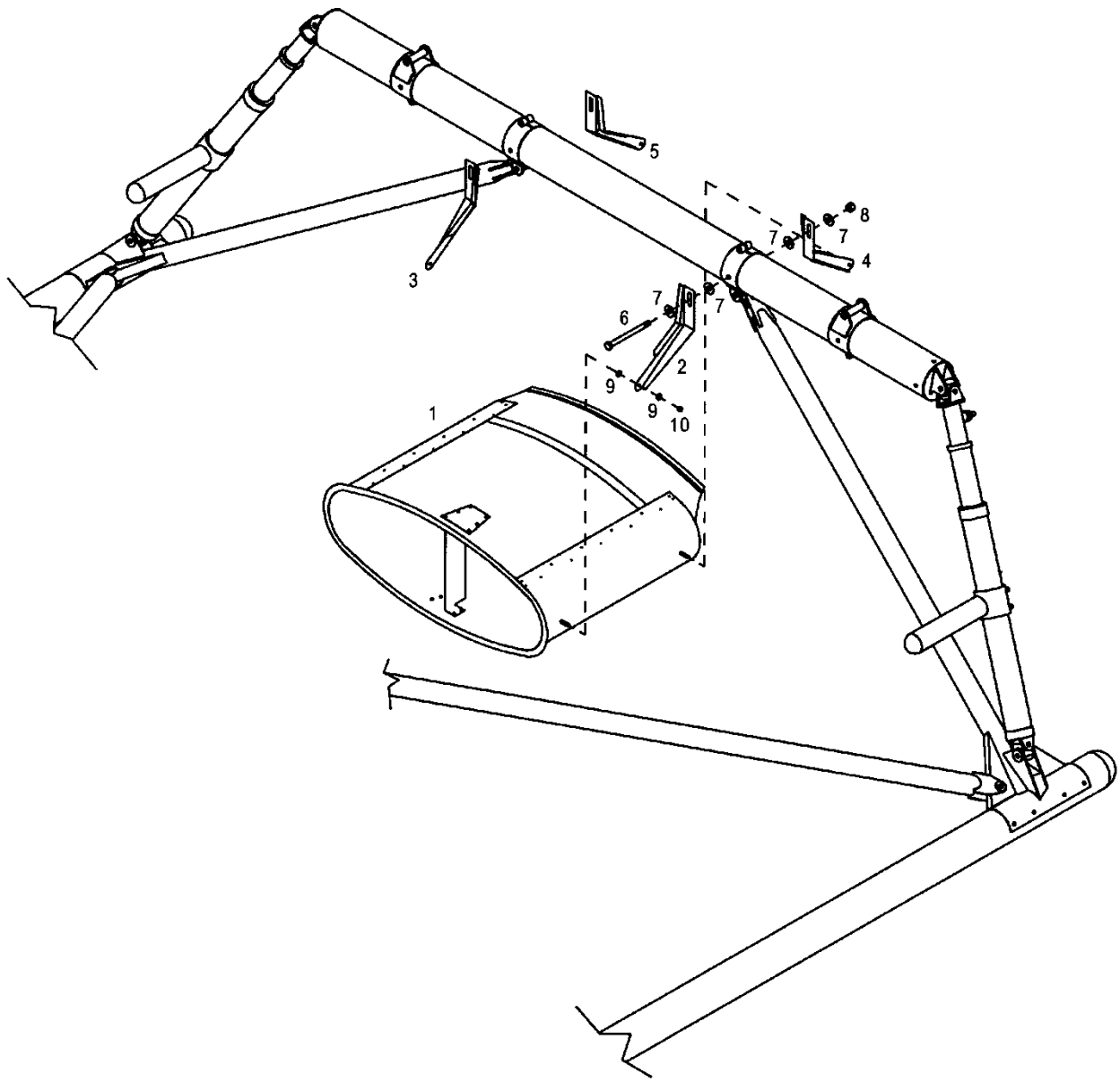

-5 Assembly

FIGURE 6-13. EDUCTOR INSTALLATION

UNCONTROLLED COPY WHEN DOWNLOADED OR PRINTED

Visit www.enstromhelicopter.com for instructions to order an original manual and to register for email notification of updates.

FIGURE 6-13. EDUCTOR INSTALLATION

ITEM NUMBER	PART NUMBER	DESCRIPTION	QTY PER ASSY	EFFECTIVITY		
				TH-28	480	480B
1*	4120045-9	. Eductor Assembly	1	X	X	X
1	4120045-5	. Eductor Assembly (Alternate)	1	X	X	X
2	4120040-5	. Strap, L/H Forward	1	X	X	X
3	4120040-6	. Strap, R/H Forward	1	X	X	X
4	4120040-3	. Strap, L/H Aft	1	X	X	X
5	4120040-4	. Strap, R/H Aft	1	X	X	X
6	AN5-37A	. Bolt	2	X	X	X
7	5/16 Harper	. Washer, Flat	8	X	X	X
8	AN365-524A	. Nut	2	X	X	X
9	AN960C10	. Washer	8	X	X	X
10	MS21042-3	. Nut	4	X	X	X

* Effective 480B, S/N 5130 and subsequent. Retrofittable to 480 S/N 5001 – 5041 and 480B S/N 5042 and subsequent.

UNCONTROLLED COPY WHEN DOWNLOADED OR PRINTED

Visit www.enstromhelicopter.com for instructions to order an original manual and to register for email notification of updates.

INTENTIONALLY LEFT BLANK

UNCONTROLLED COPY WHEN DOWNLOADED OR PRINTED

Visit www.enstromhelicopter.com for instructions to order an original manual and to register for email notification of updates.

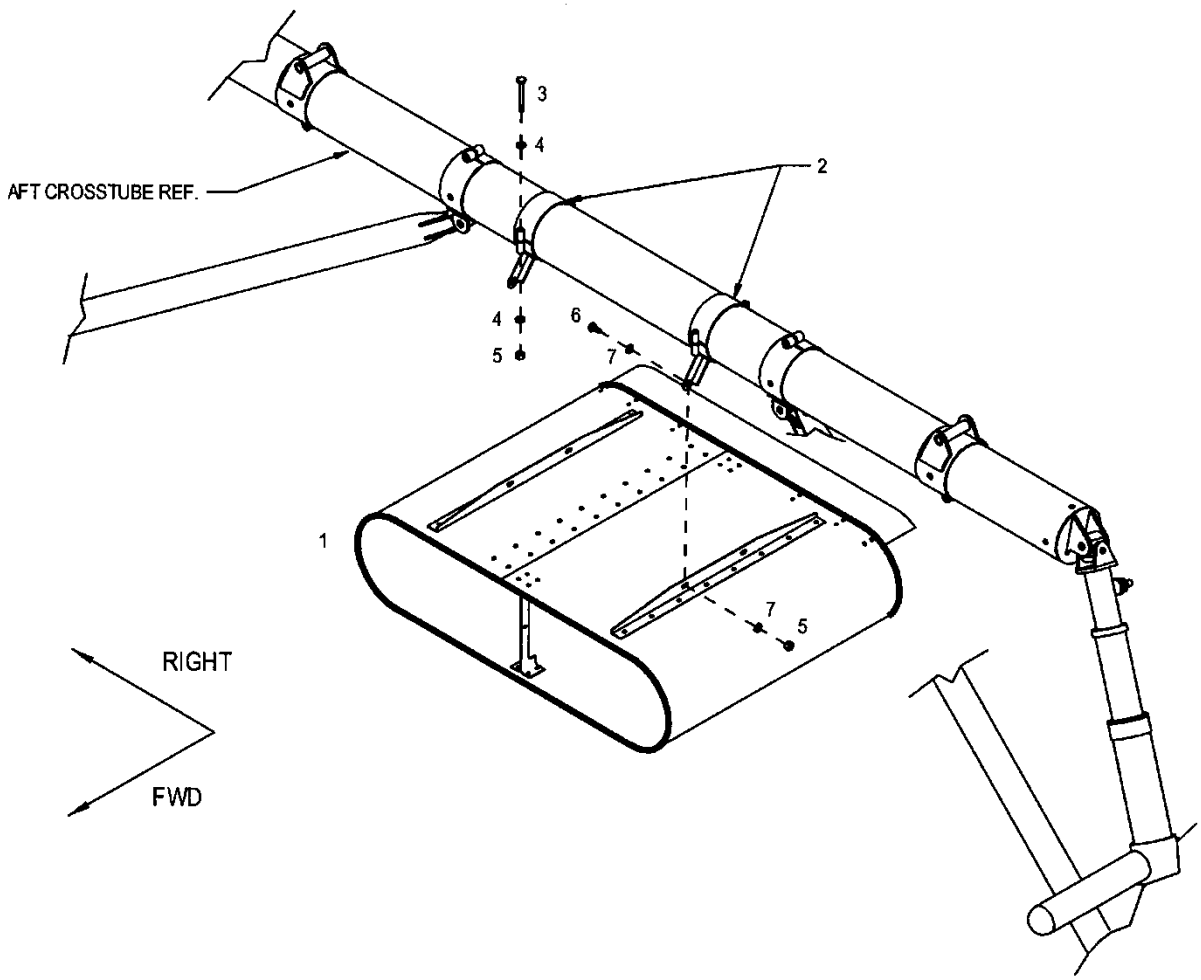

This installation is obsolete.
See Figure 6-13 for latest configuration.

FIGURE 6-14. EDUCTOR INSTALLATION (OBSOLETE)

UNCONTROLLED COPY WHEN DOWNLOADED OR PRINTED

Visit www.enstromhelicopter.com for instructions to order an original manual and to register for email notification of updates.

FIGURE 6-14. EDUCTOR INSTALLATION (OBSOLETE)

ITEM NUMBER	PART NUMBER	DESCRIPTION	QTY PER ASSY	EFFECTIVITY		
				TH-28	480	480B
1	4120017-3	. Eductor Assembly	1	X	X	
2	4120018-1	. Clamp	2	X	X	
3	AN3-16A	. Bolt	4	X	X	
4	AN960-10	. Washer	8	X	X	
5	MS21042-3	. Nut	8	X	X	
6	AN3-3A	. Bolt	4	X	X	
7	AN960C10	. Washer	8	X	X	

UNCONTROLLED COPY WHEN DOWNLOADED OR PRINTED

Visit www.enstromhelicopter.com for instructions to order an original manual and to register for email notification of updates.

INTENTIONALLY LEFT BLANK

UNCONTROLLED COPY WHEN DOWNLOADED OR PRINTED

Visit www.enstromhelicopter.com for instructions to order an original manual and to register for email notification of updates.

SECTION 7

POWER TRAIN

UNCONTROLLED COPY WHEN DOWNLOADED OR PRINTED

Visit www.enstromhelicopter.com for instructions to order an original manual and to register for email notification of updates.

INTENTIONALLY LEFT BLANK

UNCONTROLLED COPY WHEN DOWNLOADED OR PRINTED

Visit www.enstromhelicopter.com for instructions to order an original manual and to register for email notification of updates.

SECTION 7 – TABLE OF CONTENTS

	Cover	7-1
	Table of Contents	7-1.2
7-1	Overrunning Clutch Assembly	7-2
7-1.1	Clutch Vent Reservoir Assembly	7-3
7-2	Drive Shaft Assembly	7-4
7-3	Drive System Installation	7-6
7-4	Lower Pulley Assembly (Grease Lubricated)	7-10
7-5	Lower Pulley Assembly (Oil Lubricated)	7-14
7-6	Upper Pulley Assembly (Keyed Pinion)	7-18
7-6.1	Upper Pulley Assembly (Splined Pinion)	7-20.2
7-7	Main Rotor Transmission Installation	7-22
7-8	Main Rotor Transmission Assembly (Keyed Pinion)	7-24
7-8.1	Main Rotor Transmission Assembly (Splined Pinion)	7-26.2
7-8.2	Main Rotor Transmission Seal Retainer Assembly	7-27.1
7-9	Main Rotor Transmission Filtration/Cooling System	7-28
7-10	Tail Rotor Drive Shaft Installation	7-32
7-11	Tail Rotor Transmission Assembly	7-36

UNCONTROLLED COPY WHEN DOWNLOADED OR PRINTED

Visit www.enstromhelicopter.com for instructions to order an original manual and to register for email notification of updates.

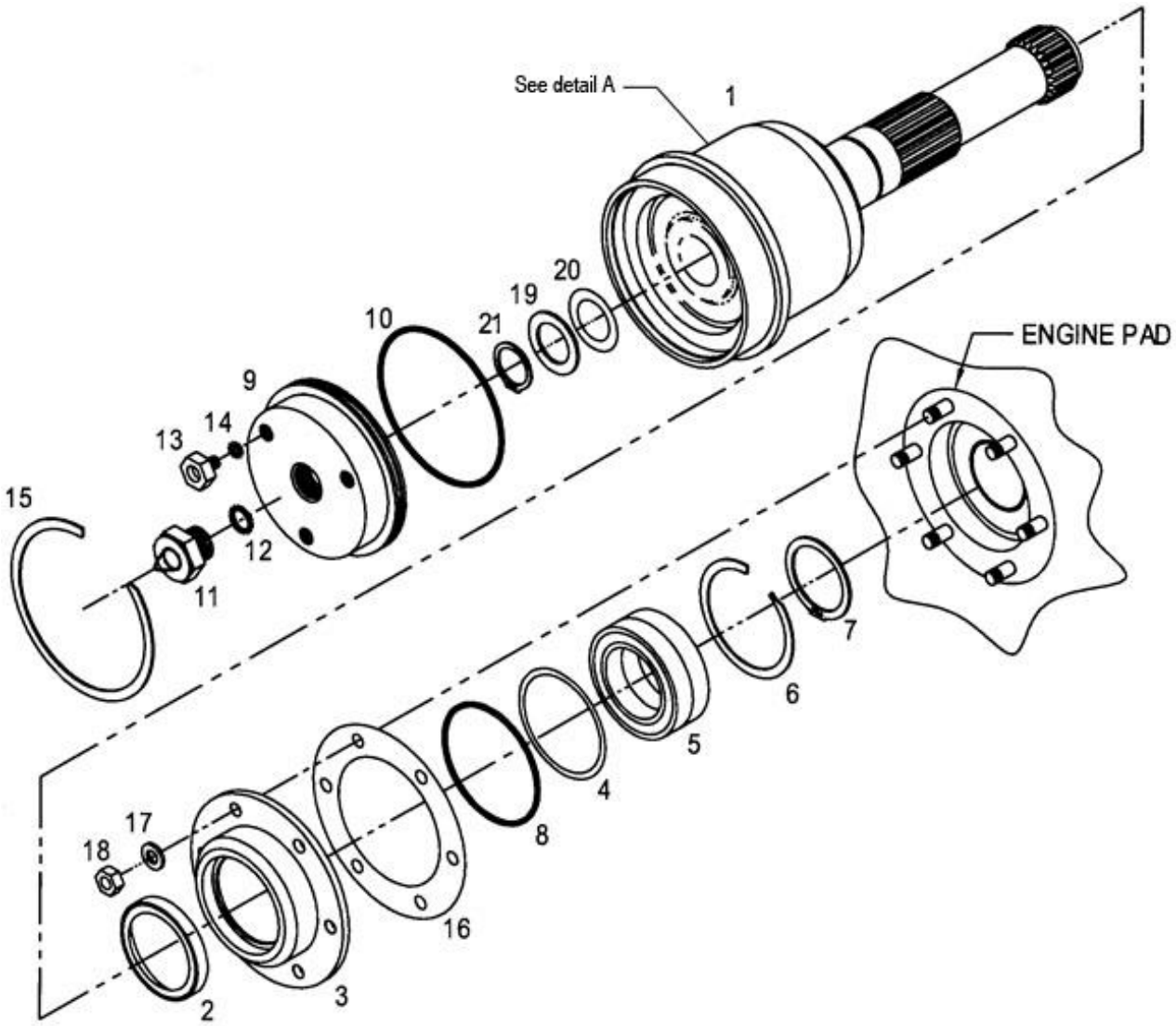

FIGURE 7-1. OVERRUNNING CLUTCH ASSEMBLY

UNCONTROLLED COPY WHEN DOWNLOADED OR PRINTED

Visit www.enstromhelicopter.com for instructions to order an original manual and to register for email notification of updates.

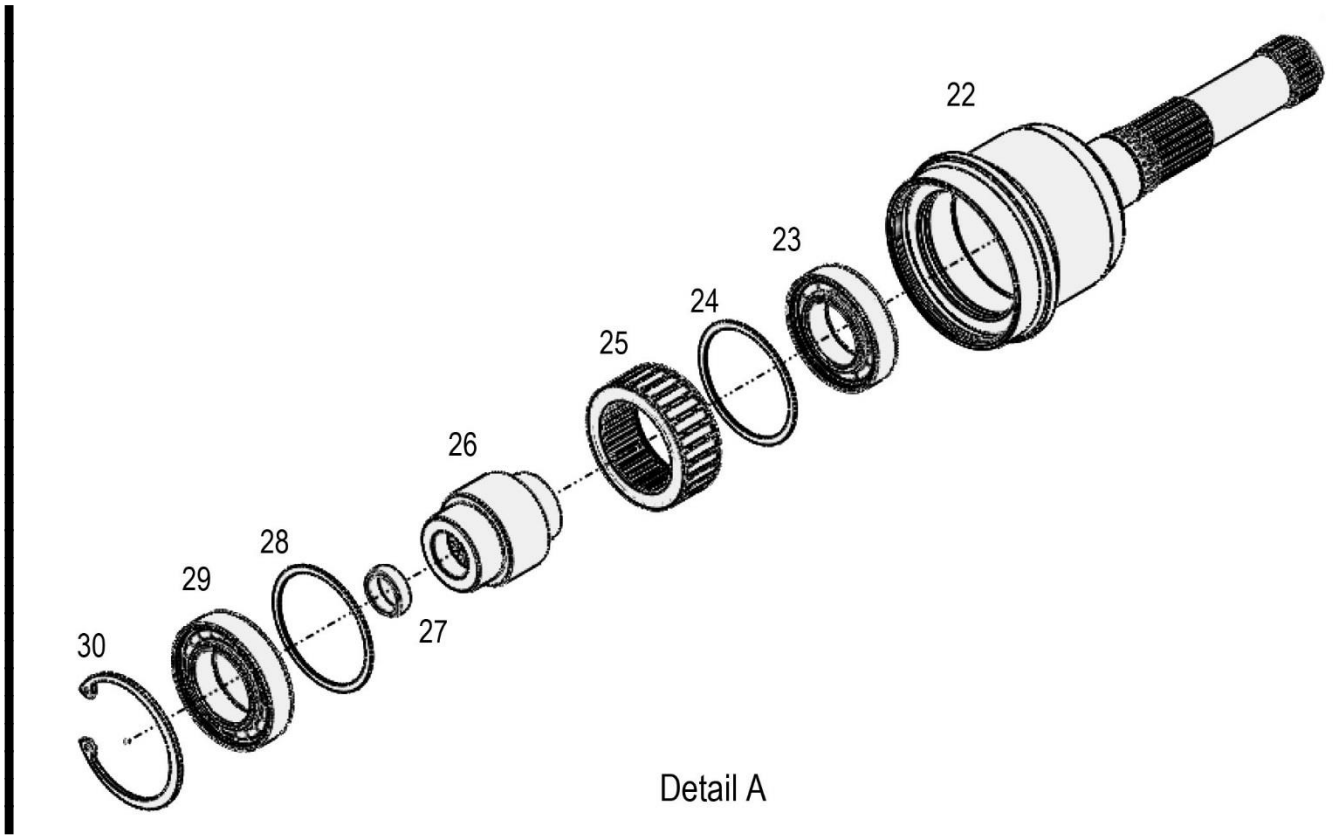

FIGURE 7-1. OVERRUNNING CLUTCH ASSEMBLY

UNCONTROLLED COPY WHEN DOWNLOADED OR PRINTED

Visit www.enstromhelicopter.com for instructions to order an original manual and to register for email notification of updates.

FIGURE 7-1. OVERRUNNING CLUTCH ASSEMBLY

ITEM NUMBER	PART NUMBER	DESCRIPTION	QTY PER ASSY	EFFECTIVITY		
				TH-28	480	480B
1	4131001-131	. Overrunning Clutch Assembly/Installation	1		X	X
1†	4131001-105	. Overrunning Clutch Assembly (Superseded by 4131001-131)	1		X	X
2	14809	. . Seal	1		X	X
2	CRWI14809	. . Seal (Superseded by 14809)	1		X	X
3●	4131001-129	. . Bearing Housing Assembly, with Clutch Vent (Used with 4131001-131)	1		X	X
3	4131006-25	. . . Housing, Bearing (Standard)	1		X	X
3*	4131006-31	. . . Housing, Bearing, (Offset 0.002, 150°, 2 Notches)	A/R		X	X
3*	4131006-33	. . . Housing, Bearing, (Offset 0.002, 210°, 2 Notches)	A/R		X	X
3**	4131006-45	. . . Housing, Bearing, (Offset 0.003, 210°, 3 Notches)	A/R	X	X	X
4	4131005-35	. . . Shim, .001"	A/R		X	X
4	4131005-37	. . . Shim, .005"	A/R		X	X
5	ECD4014-11	. . . Bearing Set	1		X	X
6	VH-218	. . . Retaining Ring	1		X	X
7	N5100-137-S-PP	. . . Retaining Ring	1		X	X
8	2-141	. . . O-Ring (N674-70 Material)	1		X	X
9	4131008-15	. . Cap	1		X	X
10	2-041	. . O-Ring (N674-70)	1		X	X
11	S83BZ-2	. . Sight Plug	1		X	X
12	M25988/1-906	. . O-Ring	1		X	X
13	AN814-2DL	. . Plug	3		X	X
14 ≡	NAS1612-2A	. . O-Ring	3		X	X
15	VH-337	. . Retaining Ring	1		X	X
16	23053995	. . Gasket	1		X	X
17‡	NAS1149C0432R	. Washer	6		X	X
17	AN960-416	. Washer (Superseded by NAS1149C0432R)	6		X	X
18	MS21042-4	. Nut	6		X	X
19	4131005-25	. Shim, .050"	1		X	X
20	4131005-27	. Shim, .001"	A/R		X	X
20	4131005-29	. Shim, .010"	A/R		X	X
21	N5100-78-S-PP	. Retaining Ring	1		X	X
–**	4230001-1	Kit Clutch Vent Reservoir Kit (Contains 4130001-129 and 4131006-45)	A/R	X	X	X

UNCONTROLLED COPY WHEN DOWNLOADED OR PRINTED

Visit www.enstromhelicopter.com for instructions to order an original manual and to register for email notification of updates.

FIGURE 7-1. OVERRUNNING CLUTCH ASSEMBLY

ITEM NUMBER	PART NUMBER	DESCRIPTION	QTY PER ASSY	EFFECTIVITY		
				TH-28	480	480B
22	4131002-15	. Shaft	1			X
23	ECD4015-11	. Bearing	1			X
24	4131005-13	. Shim (0.001”)	A/R			X
24	4131005-15	. Shim (0.005”)	A/R			X
24	4131005-17	. Shim (0.010”)	A/R			X
24	4131005-31	. Shim (0.050”)	A/R			X
25	CL42498	. Sprag Retainer Assembly	1			X
26	4131004-15	. Inner Race	1			X
27	4131009-13	. Pilot Bushing	1			X
28	4131005-13	. Shim (0.001”)	A/R			X
28	4131005-15	. Shim (0.005”)	A/R			X
28	4131005-17	. Shim (0.010”)	A/R			X
28	4131005-31	. Shim (0.050”)	A/R			X
29	ECD4016-11	. Bearing	1			X
30	N500-268-S-PP	. Snap Ring	1			X

≡ See Appendix A for equivalent part information.

● Vented housing for use with Clutch Vent Reservoir Assembly (See Figure 7-1.1)

* Effectivity 480B S/N 5143 and subsequent. Applicable to 480 S/N 5001 to 5041 and 480B S/N 5042 and subsequent.

† Effectivity 480B S/N 5168 and subsequent. Retrofittable to 480 S/N 5001 to 5041 and 480B S/N 5042 and subsequent.

** For use with all TH-28 ships and engines requiring an offset bearing housing

‡ Effectivity 480B S/N 5207 and subsequent. Retrofittable to 480 S/N 5001 – 5041 and 480B S/N 5042 and subsequent.

UNCONTROLLED COPY WHEN DOWNLOADED OR PRINTED

Visit www.enstromhelicopter.com for instructions to order an original manual and to register for email notification of updates.

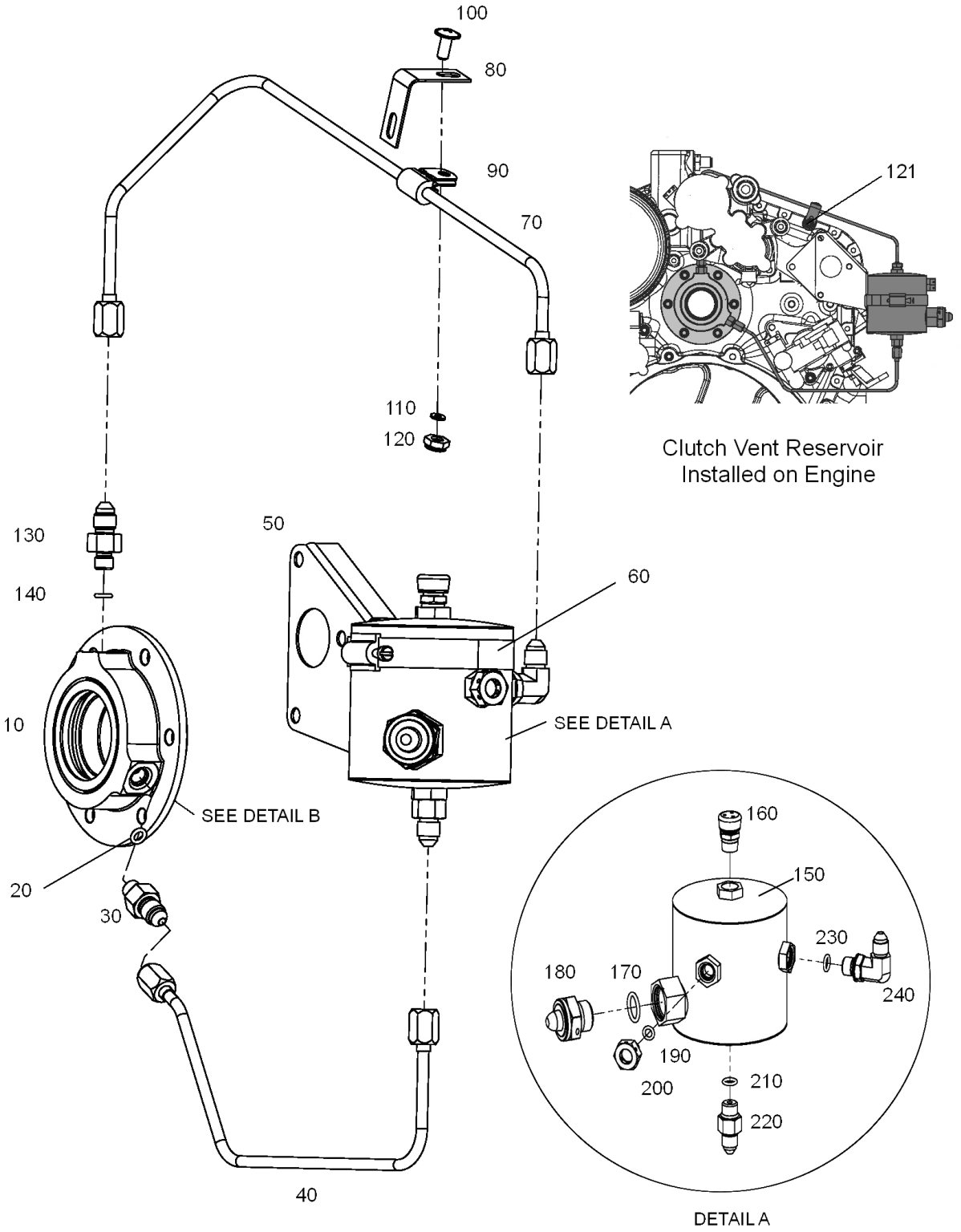

Sheet 1 of 2

FIGURE 7-1.1 CLUTCH VENT RESERVOIR ASSEMBLY

UNCONTROLLED COPY WHEN DOWNLOADED OR PRINTED

Visit www.enstromhelicopter.com for instructions to order an original manual and to register for email notification of updates.

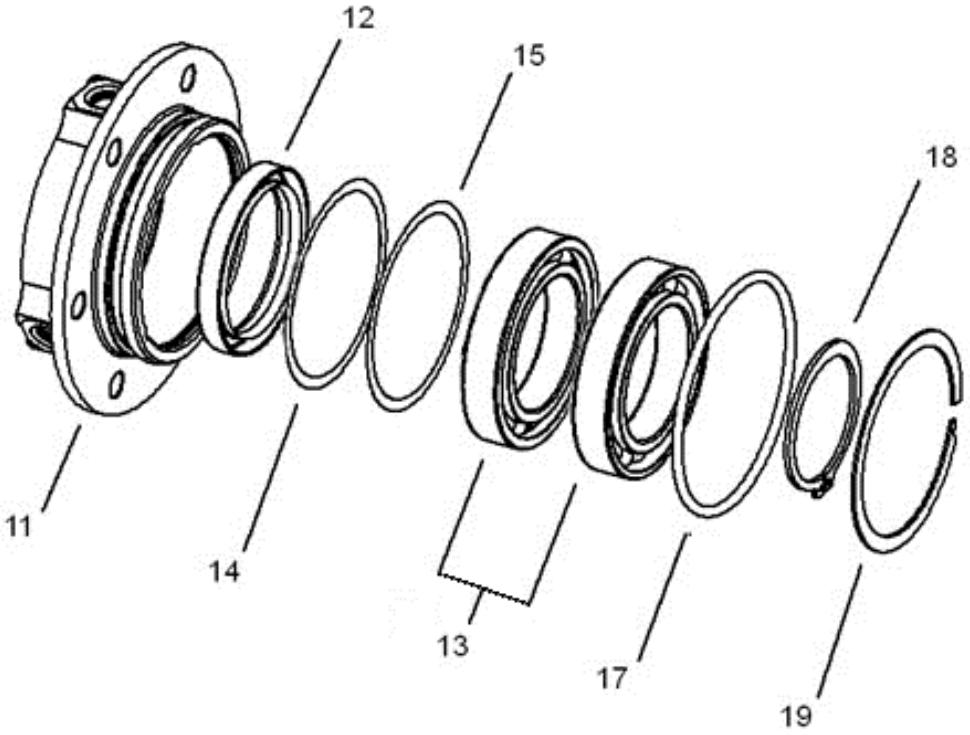

Detail B

Bearing Housing Assembly

Sheet 2 of 2

FIGURE 7-1.1 CLUTCH VENT RESERVOIR ASSEMBLY

UNCONTROLLED COPY WHEN DOWNLOADED OR PRINTED

Visit www.enstromhelicopter.com for instructions to order an original manual and to register for email notification of updates.

FIGURE 7-1.1 CLUTCH VENT RESERVOIR ASSEMBLY

ITEM NUMBER	PART NUMBER	DESCRIPTION	QTY PER ASSY	EFFECTIVITY		
				TH-28	480	480B
–	4131020-5	Clutch Vent Reservoir Assembly/Install	REF	X	X	X
–	4131020-7	Clutch Vent Reservoir Assembly	REF	X	X	X
10	4131001-129	. Bearing Housing. Assembly, with Vented Housing	1	X	X	X
11*	4131006-25	. . Housing, Bearing, (Clutch Vent)	1	X	X	X
12	14809	. . Seal: Oil 1.500" Shaft Diameter	1	X	X	X
13	ECD4014-11	. . Bearing Set	1	X	X	X
14	4131005-35	. . Shim: T302, 2.140" OD X 1.9" ID	A/R	X	X	X
15	4131005-37	. . Shim: T302, 2.140" OD X 1.9" ID	A/R	X	X	X
16	[deleted]					
17	2-141	. . O-Ring: N674-70, 2.300" (.103")	1	X	X	X
18	N5100-137-S-PP	. . Ring, Snap (Ext), 1.375" (.050")	1	X	X	X
19	VH-218	. . Ring, Snap (Int), 2.187" (.031")	1	X	X	X
20	3-902 V747-75	. O-Ring	1	X	X	X
30	4131024-11	. Fitting	1	X	X	X
40	4131022-7	. Tube Assembly	1	X	X	X
50	4131021-15	. Bracket	1	X	X	X
60	NAS1922-0275-3	. Hose Clamp	1	X	X	X
70	4131022-5	. Tube Assembly	1	X	X	X
80	4131021-17	. Clip	1	X	X	X
90	MS21919WDG3	. Clamp (Included in Tube Assembly)	1	X	X	X
100	AN525-10R6	. Screw	1	X	X	X
110	NAS1149F0332P	. Washer	1	X	X	X
120	MS21043-3	. Nut	1	X	X	X
121	4122043-11	. Stand Off Stud	1	X	X	X
130	4131024-11	. Fitting	1	X	X	X
140	3-902 V747-75	. O-Ring	1	X	X	X
150	4131023-5	. Reservoir Weldment	1	X	X	X
160	321620	. Breather	1	X	X	X
160	369583	. Breather (Acceptable Alternate)	1	X	X	X
170	M25988/1-906	. O-Ring	1	X	X	X
180	S83BZ-2	. Sight Plug	1	X	X	X
190	3-902 V747-75	. O-Ring	1	X	X	X
200	AN814-2DL	. Fill Plug	1	X	X	X
–	MS20995-C25	. Safety Wire	10 in.	X	X	X
210	3-903 V747-75	. O-Ring	1	X	X	X

UNCONTROLLED COPY WHEN DOWNLOADED OR PRINTED

Visit www.enstromhelicopter.com for instructions to order an original manual and to register for email notification of updates.

FIGURE 7-1.1 CLUTCH VENT RESERVOIR ASSEMBLY

ITEM NUMBER	PART NUMBER	DESCRIPTION	QTY PER ASSY	EFFECTIVITY		
				TH-28	480	480B
220	MS51525B3S	. Fitting	1	X	X	X
230	3-903 V747-75	. O-Ring	1	X	X	X
240	MS51527B3S	. Fitting Elbow	1	X	X	X

* Reference TH-28/480 Series Maintenance Manual Paragraph 11-8 for overrunning clutch installation information.

UNCONTROLLED COPY WHEN DOWNLOADED OR PRINTED

Visit www.enstromhelicopter.com for instructions to order an original manual and to register for email notification of updates.

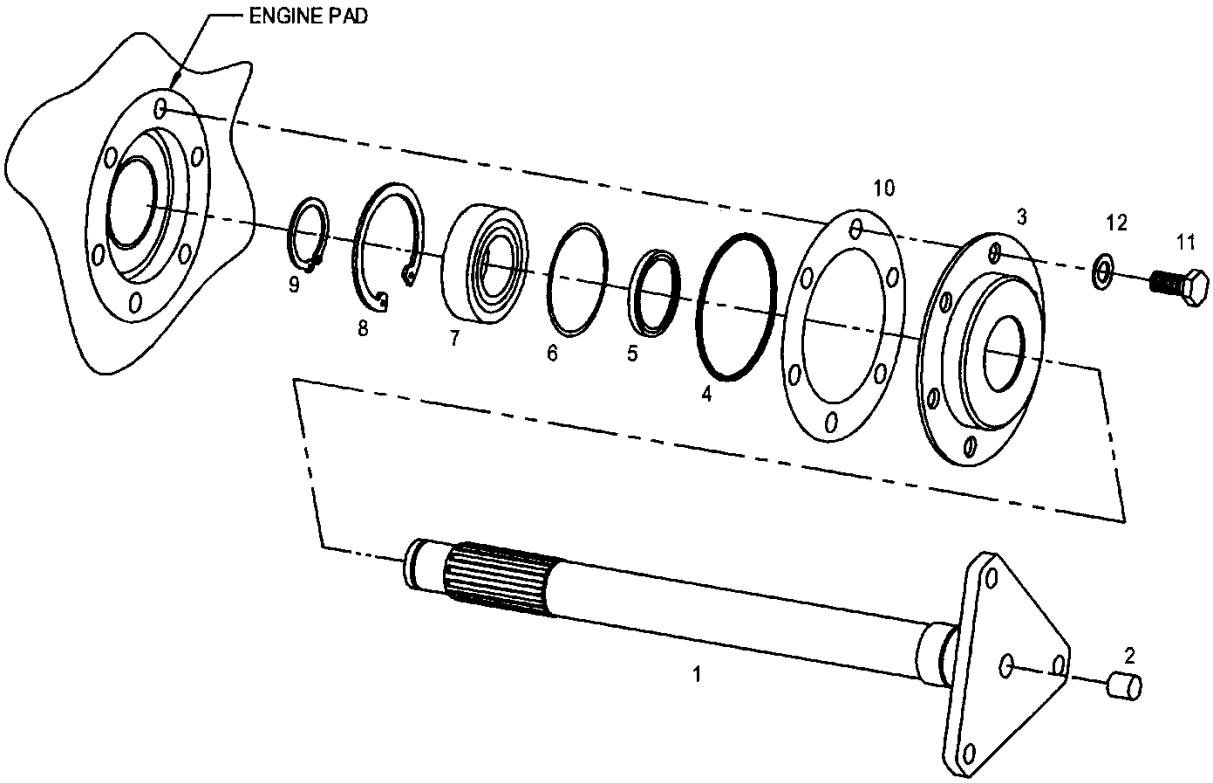

FIGURE 7-2. DRIVE SHAFT ASSEMBLY

UNCONTROLLED COPY WHEN DOWNLOADED OR PRINTED

Visit www.enstromhelicopter.com for instructions to order an original manual and to register for email notification of updates.

FIGURE 7-2. DRIVE SHAFT ASSEMBLY

ITEM NUMBER	PART NUMBER	DESCRIPTION	QTY PER ASSY	EFFECTIVITY		
				TH-28	480	480B
–*	4131001-111	. Drive Shaft Assembly	1	X	X	X
–**	4131001-113	. Drive Shaft Assembly	1		X	X
–†	4131001-115	. Drive Shaft Assembly	1		X	X
1	4131003-23	. . Splined Driveshaft Overrunning Clutch	1	X	X	X
3¤	4131007-15	. . Bearing Housing (Used with 4131001-111)	1	X	X	X
3¤	4131007-17	. . Bearing Housing (Used with 4131001-113)	1		X	X
3¤	4131007-19	. . Bearing Housing (Used with 4131001-115)	1		X	X
4	2-141	. . O-Ring	1	X	X	X
5	11052	. . Seal	1	X	X	X
6	4131005-39	. . Shim, .002"	A/R	X	X	X
6	4131005-41	. . Shim, .001"	A/R	X	X	X
7	ECD4017-11	. . Bearing	1	X	X	X
8	N5000-187-S-PP	. . Retaining Ring	1	X	X	X
9	N5100-98-S-PP	. . Retaining Ring	1	X	X	X
–	4131001-103	. Drive Shaft Assembly (Alternate)	1	X	X	X
1	4131003-21	. . Drive Shaft	1	X	X	X
2	4131005-11	. . Plug	1	X	X	X
3	4131007-15	. . Bearing Housing	1	X	X	X
4	2-141	. . O-Ring	1	X	X	X
5	11052	. . Seal	1	X	X	X
6	4131005-39	. . Shim, .002"	A/R	X	X	X
6	4131005-41	. . Shim, .001"	A/R	X	X	X
7	ECD4017-11	. . Bearing	1	X	X	X
8	N5000-187-S-PP	. . Retaining Ring	1	X	X	X
9	N5100-98-S-PP	. . Retaining Ring	1	X	X	X
10	23053995	. Gasket	1	X	X	X
11	4131010-13	. Bolt	6	X	X	X
12●	NAS1149F0532P	. Washer	6		X	X
12	AN960-516L	. Washer (Superseded by NAS1149F0532P)	6	X	X	X

* Standard

** Offset (.0031-.0050”)

† Offset (.0051-.0070”)

● Effectivity 480B S/N 5207 and subsequent. Retrofittable to 480 S/N 5001 – 5041, 480B S/N 5042 and subsequent.

¤ Reference TH-28/480 Series Maintenance Manual Paragraph 11-14 for power output shaft installation information.

UNCONTROLLED COPY WHEN DOWNLOADED OR PRINTED

Visit www.enstromhelicopter.com for instructions to order an original manual and to register for email notification of updates.

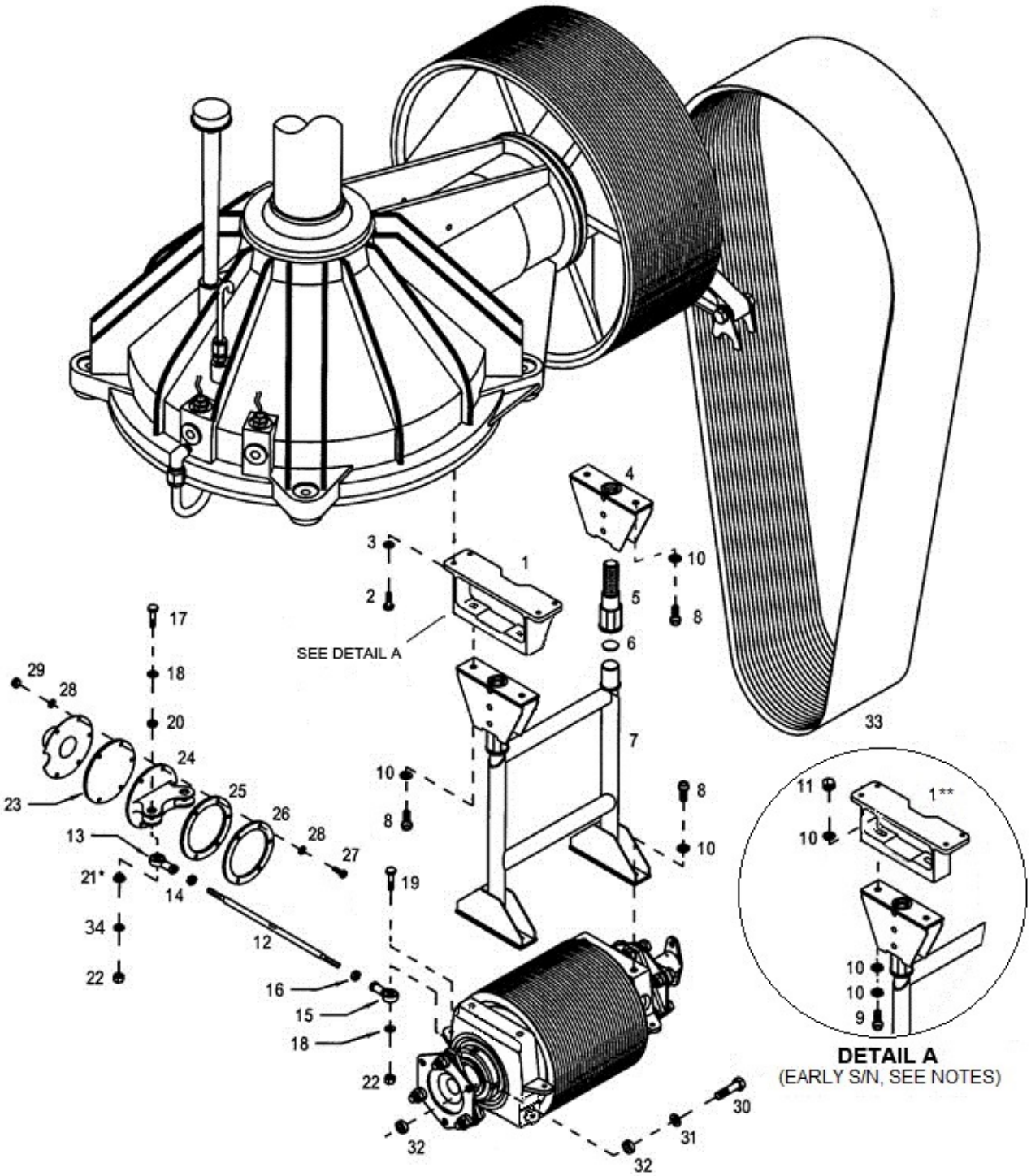

FIGURE 7-3. DRIVE SYSTEM INSTALLATION

UNCONTROLLED COPY WHEN DOWNLOADED OR PRINTED

Visit www.enstromhelicopter.com for instructions to order an original manual and to register for email notification of updates.

FIGURE 7-3. DRIVE SHAFT INSTALLATION

ITEM NUMBER	PART NUMBER	DESCRIPTION	QTY PER ASSY	EFFECTIVITY		
				TH-28	480	480B
1*	4130525-1	. Fitting Assembly	1	X	X	X
1**	4130525-11	. Fitting (Obsolete)	1	X	X	
2●	AN3H5A	. Bolt	4	X	X	X
3●	NAS1149D0363J	. Washer	4		X	X
3	AN960PD10	. Washer (Superseded by NAS1149D0363J)	4	X	X	X
4	4130518-1	. Bracket	2	X	X	X
5	4130507-13	. Threaded Plug	2	X	X	X
6	4130507-19	. Bearing	2	X	X	X
7	4130531-1	. H-Strut	1	X	X	X
8♦	NAS144DH-10	. Bolt	8	X	X	X
9*	AN4H5A	. Bolt	2	X	X	X
9**	NAS144DH-12	. Bolt	2	X	X	
10* ≡	MS20002C4	. Washer	10	X	X	X
10**	AN960PD416	. Washer	10	X	X	
11**	AN365-428A	. Nut	2	X	X	
–	4130503-1	. Drag Link Assembly	2	X	X	X
12	4130503-11	. . Shaft	1	X	X	X
13 ≡	HFVV3M	. . Rod End Bearing	1	X	X	X
14	AN315-3R	. . Nut	1	X	X	X
15 ≡	HFLVV3M	. . Rod End Bearing	1	X	X	X
16	AN315-3L	. . Nut	1	X	X	X
17●●	AN3-7A	. Bolt	2		X	X
17	AN3-6A	. Bolt (Superseded by AN3-7A)	2	X	X	X
18●	NAS1149F0332P	. Washer	4		X	X
18	AN960-10L	. Washer (Superseded by NAS1149F0332P)	10	X	X	X
19	AN3-7A	. Bolt	2	X	X	X
20†	4130529-15	. Bushing	2	X	X	X
21‡	4130529-25	. Bushing	4	X	X	
22●	MS21044N3	. Nut	4		X	X
22	AN365-1032A	. Nut (Superseded by MS21044N3)	4	X	X	X
23	4130529-21	. Shock Absorber	1	X	X	X
24	4130529-13	. Isolation Mount	1	X	X	X
25	4130529-19	. Shock Absorber	1	X	X	X
26	4130529-17	. Isolation Mount Ring	1	X	X	X
27●	MS35206-248	. Screw	5		X	X
27	AN515-8R14	. Screw (Superseded by MS35206-248)	5	X	X	X

UNCONTROLLED COPY WHEN DOWNLOADED OR PRINTED

Visit www.enstromhelicopter.com for instructions to order an original manual and to register for email notification of updates.

FIGURE 7-3. DRIVE SHAFT INSTALLATION

ITEM NUMBER	PART NUMBER	DESCRIPTION	QTY PER ASSY	EFFECTIVITY		
				TH-28	480	480B
28●	NAS1149DN816J	. Washer	10		X	X
28	AN960PD8L	. Washer (Superseded by NAS1149DN816J)	10	X	X	X
29●	MS1083N08	. Nut	5		X	X
29	AN364-832A	. Nut (Superseded by MS1083N08)	5	X	X	X
30	4130520-11	. Bolt	3	X	X	X
31	AN960-516	. Washer	A/R	X	X	X
31	AN960-516L	. Washer	A/R	X	X	X
32	4130521-9	. Shim, .090”	A/R	X	X	X
32	4130521-11	. Shim, .110”	A/R	X	X	X
32	4130521-13	. Shim, .130”	A/R	X	X	X
32	4130521-15	. Shim, .150”	A/R	X	X	X
32	4130521-17	. Shim, .170”	A/R	X	X	X
32	4130521-21	. Shim, .210”	A/R	X	X	X
32	4130521-19	. Shim, .190”	A/R	X	X	X
32	4130521-23	. Shim, .230”	A/R	X	X	X
32	4130521-25	. Shim, .250”	A/R	X	X	X
33	ECD4000-11	. Drive Belt	1	X	X	X
34●●	NAS1149F0363P	. Washer	2		X	X

♦ Use six (6) for aircraft with fitting 4130525-11.

* Used on TH-28, S/N 3007 and subsequent; 480, S/N 5017 and subsequent; or aircraft modified with the Increased Rotor Speed Kit, P/N 4230002.

** Used on TH-28, S/N 3006; 480, S/N 5001-5016.

† Used on TH-28, S/N 3007 and subsequent; 480, S/N 5010 and subsequent.

‡ Used on TH-28, S/N 3006; 480, S/N 5001-5009.

≡ See Appendix A for equivalent part information.

● Effectivity 480B S/N 5194 and subsequent. Retrofittable to 480 S/N 5001 – 5041, 480B S/N 5042 and subsequent.

●● Effectivity 480B S/N 5212 and subsequent. Retrofittable to 480 S/N 5001 – 5041, 480B S/N 5042 and subsequent.

UNCONTROLLED COPY WHEN DOWNLOADED OR PRINTED

Visit www.enstromhelicopter.com for instructions to order an original manual and to register for email notification of updates.

INTENTIONALLY LEFT BLANK

UNCONTROLLED COPY WHEN DOWNLOADED OR PRINTED

Visit www.enstromhelicopter.com for instructions to order an original manual and to register for email notification of updates.

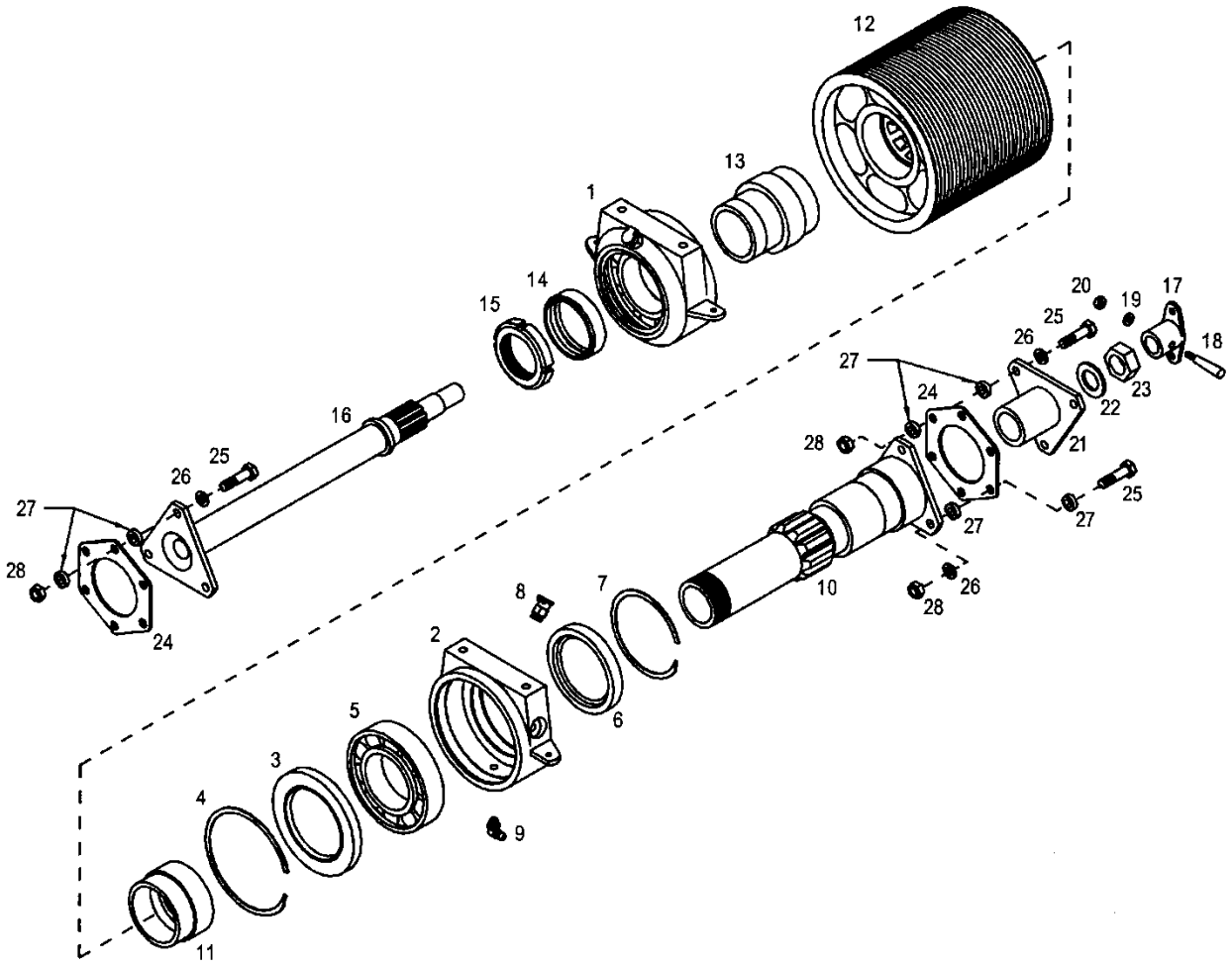

FIGURE 7-4. LOWER PULLEY ASSEMBLY (GREASE LUBRICATED)

UNCONTROLLED COPY WHEN DOWNLOADED OR PRINTED

Visit www.enstromhelicopter.com for instructions to order an original manual and to register for email notification of updates.

FIGURE 7-4. LOWER PULLEY ASSEMBLY (GREASE LUBRICATED)

ITEM NUMBER	PART NUMBER	DESCRIPTION	QTY PER ASSY	EFFECTIVITY		
				TH-28	480	480B
–*	4130500-101	. Lower Pulley Assembly	1	X	X	
–**	4130500-5	. Lower Pulley Assembly	1	X	X	
1	4130500-7	. . Bearing Housing Assembly	2	X	X	
2	4130509-1	. . . Bearing Housing	1	X	X	
3	24914	. . . Seal	1	X	X	
4	VH-325	. . . Retaining Ring	1	X	X	
5	ECD4056-5	. . . Bearing	1	X	X	
5	ECD4056-3	. . . Bearing (Alternate)	1	X	X	
5	ECD4056-1	. . . Bearing (Alternate)	1	X	X	
6	27539	. . . Seal	1	X	X	
7	VH-400	. . . Retaining Ring	1	X	X	
8	00208	. . . Pressure Vent Cap	1	X	X	
9	1911-B	. . . Fitting, Grease	1	X	X	
10	4130508-13	. . Splined Outer Shaft	1	X	X	
11	4130513-13	. . Spacer	1	X	X	
12	4130510-19	. . Driver Pulley (Used with 4130500-101)	1	X	X	
12	4130510-17	. . Driver Pulley (Used with 4130500-5)	1	X	X	
13	4130512-13	. . Bearing Retainer	1	X	X	
14	4130517-13	. . Sleeve	1	X	X	
15	4130524-13	. . Nut	1	X	X	
–	4130500-901	. Shaft and Hub Assembly, M/R Lower Pulley	1	X	X	
16	4130506-15	. . Splined Inner Shaft	1	X	X	
17	4130516-17	. . Hub Coupling	1	X	X	
18	AN386-2-9A	. . Taper Pin	1	X	X	
18†	4130541-11	. . Taper Pin (Alternate to AN386-2-9A)	1	X	X	
18†	4130541-13	. . Taper Pin (Alternate to AN386-2-9A)	1	X	X	
19	AN960-10	. . Washer	1	X	X	
20	AN364-1032A	. . Nut	1	X	X	
21	4130504-13	. Splined Coupling	1	X	X	
22	C148740	. Washer	1	X	X	
23	NAS509-12	. Nut	1	X	X	
24	ECD4024-1	. Flex Pack Assembly	2	X	X	
25	4130520-13	. Bolt	9	X	X	
26	AN960-516	. Washer	A/R	X	X	
26	AN960-516L	. Washer	A/R	X	X	
27	4130521-9	. Shim, .090”	A/R	X	X	

UNCONTROLLED COPY WHEN DOWNLOADED OR PRINTED

Visit www.enstromhelicopter.com for instructions to order an original manual and to register for email notification of updates.

FIGURE 7-4. LOWER PULLEY ASSEMBLY (GREASE LUBRICATED)

ITEM NUMBER	PART NUMBER	DESCRIPTION	QTY PER ASSY	EFFECTIVITY		
				TH-28	480	480B
27	4130521-11	. Shim, .110”	A/R	X	X	
27	4130521-13	. Shim, .130”	A/R	X	X	
27	4130521-15	. Shim, .150”	A/R	X	X	
27	4130521-17	. Shim, .170”	A/R	X	X	
27	4130521-19	. Shim, .190”	A/R	X	X	
27	4130521-21	. Shim, .210”	A/R	X	X	
27	4130521-23	. Shim, .230”	A/R	X	X	
27	4130521-25	. Shim, .250”	A/R	X	X	
28	MS21044N5	. Nut: Self-Locking, 5/16-24	9	X	X	
28	AN364-524A	. Nut (Superseded by MS21044N5)	9	X	X	

* Used on TH-28, S/N 3007 and subsequent; 480, S/N 5017 and subsequent; or aircraft modified with the Increased Rotor Speed Kit, P/N 4230002.

** Used on 480, S/N 5001-5016.

† On S/N 5148 and subsequent: If the hole for the taper pin is too deep, use 4130541-11 or 4130541-13 oversized taper pins.

UNCONTROLLED COPY WHEN DOWNLOADED OR PRINTED

Visit www.enstromhelicopter.com for instructions to order an original manual and to register for email notification of updates.

INTENTIONALLY LEFT BLANK

UNCONTROLLED COPY WHEN DOWNLOADED OR PRINTED

Visit www.enstromhelicopter.com for instructions to order an original manual and to register for email notification of updates.

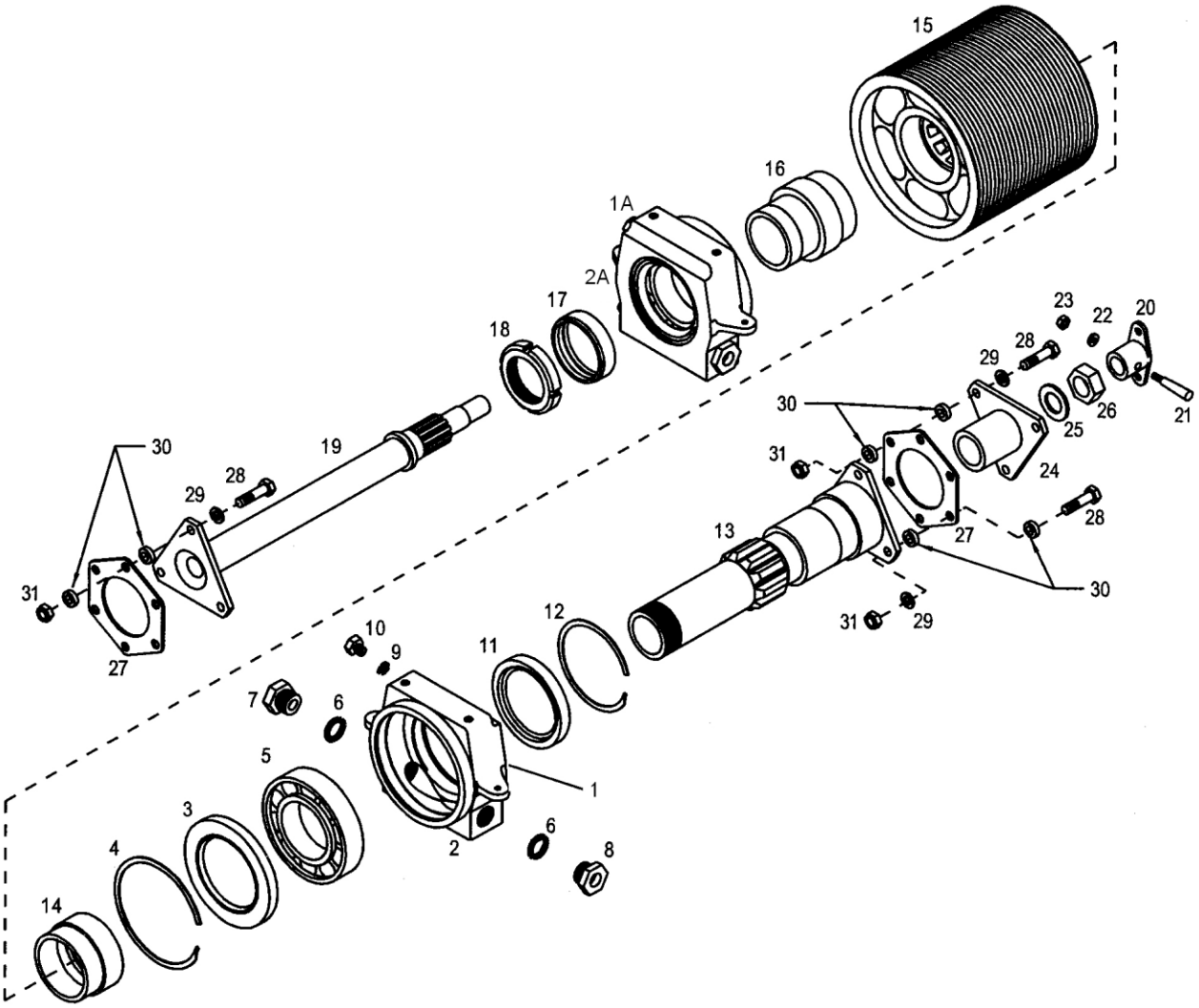

FIGURE 7-5. LOWER PULLEY ASSEMBLY (OIL LUBRICATED)

UNCONTROLLED COPY WHEN DOWNLOADED OR PRINTED

Visit www.enstromhelicopter.com for instructions to order an original manual and to register for email notification of updates.

FIGURE 7-5. LOWER PULLEY ASSEMBLY (OIL LUBRICATED)

ITEM NUMBER	PART NUMBER	DESCRIPTION	QTY PER ASSY	EFFECTIVITY		
				TH-28	480	480B
–	4130500-111	. Lower Pulley Assembly	1			X
–●●	4130500-991	. Lower Pulley Assembly	1		X	
–	4130500-911	. Pulley/Shaft Lower M/R Drive	1			X
–●●	4130500-990	. Pulley/Shaft Lower M/R Drive	1		X	
1*	4130500-105	. . Bearing Housing Assembly, Aft	1	X	X	X
1A*	4130500-106	. . Bearing Housing Assembly, Forward	1	X	X	X
2*	4130537-2	. . . Bearing Housing (Used with 4130500-105)	1	X	X	X
2A*	4130537-1	. . . Bearing Housing (Used with 4130500-106)	1	X	X	X
3*	24914	. . . Seal (Chicago Rawhide)	1	X	X	X
4*	VH-400	. . . Retaining Ring	1	X	X	X
5*	ECD4056-5	. . . Bearing	1	X	X	X
5*	ECD4056-3	. . . Bearing (Alternate)	1	X	X	X
5*	ECD4056-1	. . . Bearing (Alternate)	1	X	X	X
6*	NAS1612-8	. . . O-Ring	2	X	X	X
6*	NAS1612-8A	. . . O-Ring (Alternate)	2	X	X	X
7*	AN814-8DL	. . . Plug	1	X	X	X
8*	M1270	. . . Sight Plug (Eaton)	1	X	X	X
9*	NAS1612-2	. . . O-Ring	1	X	X	X
9*	NAS1612-2A	. . . O-Ring (Alternate)	1	X	X	X
10*	AN814-2DL	. . . Plug	1	X	X	X
11*	27539	. . . Seal (Chicago Rawhide)	1	X	X	X
12*	VH-325	. . . Retaining Ring	1	X	X	X
13	4130508-13	. . Splined Outer Shaft	1		X	X
14	4130513-13	. . Spacer	1		X	X
15†	4130510-19	. . Driver Pulley	1		X	X
15●●	4130510-17	. . Driver Pulley (Used with 4130500-990)	1		X	
15●	4130510-15	. . Driver Pulley	1		X	
16	4130512-17	. . Bearing Retainer	1		X	X
17	4130517-13	. . Sleeve	1		X	X
18	4130524-13	. . Nut	1		X	X
–	4130500-909	. Shaft and Hub Assembly, M/R Lower Pulley	1		X	X
19	4130506-15	. . Splined Inner Shaft	1		X	X
20	4130516-17	. . Hub Coupling	1		X	X
21	AN386-2-9A	. . Taper Pin	1		X	X
21**	4130541-11	. . Taper Pin (Alternate to AN386-2-9A)	1		X	X
21**	4130541-13	. . Taper Pin (Alternate to AN386-2-9A)	1		X	X

UNCONTROLLED COPY WHEN DOWNLOADED OR PRINTED

Visit www.enstromhelicopter.com for instructions to order an original manual and to register for email notification of updates.

FIGURE 7-5. LOWER PULLEY ASSEMBLY (OIL LUBRICATED)

ITEM NUMBER	PART NUMBER	DESCRIPTION	QTY PER ASSY	EFFECTIVITY		
				TH-28	480	480B
22	AN975-3	. . Washer	1		X	X
22	AN960-10	. . Washer (Superseded by AN975-3)	1		X	X
23	AN364-1032A	. . Nut	1	X	X	X
24	4130504-13	. Splined Coupling	1	X	X	X
25	C148740	. Washer	1	X	X	X
26	NAS509-12	. Nut	1	X	X	X
27	ECD4024-1	. Flex Pack Assembly	2	X	X	X
28‡	AN5-11A	. Bolt	9	X	X	X
28	4130520-13	. Bolt (Acceptable Alternate)	9	X	X	X
29‡	NAS1149C0563R	. Washer	A/R	X	X	X
29	AN960-516	. Washer (Superseded by NAS1149C0563R)	A/R	X	X	X
29	AN960-516L	. Washer (Superseded by NAS1149C0563R)	A/R	X	X	X
30	4130521-9	. Shim, .090”	A/R		X	X
30	4130521-11	. Shim, .110”	A/R		X	X
30	4130521-13	. Shim, .130”	A/R		X	X
30	4130521-15	. Shim, .150”	A/R		X	X
30	4130521-17	. Shim, .170”	A/R		X	X
30	4130521-19	. Shim, .190”	A/R		X	X
30	4130521-21	. Shim, .210”	A/R		X	X
30	4130521-23	. Shim, .230”	A/R		X	X
30	4130521-25	. Shim, .250”	A/R		X	X
31	MS21044N5	. Nut: Self-Locking, 5/16-24	9	X	X	X
31‡	MS21083N5	. Nut	9	X	X	X
31	AN364-524A	. Nut (Superseded by MS21083N5)	9	X	X	X

* Refer to Service Information Letter T-022 for installation of the oil lubricated bearing housing assemblies on grease lubricated lower pulley assemblies.

** If the hole for the taper pin is too deep, use 4130541-11 or 4130541-13 oversized taper pins.

• Effectivity 480 S/N 5015 (without Increased Rotor Speed Kit 4320002)

•• Effectivity 480 S/N 5001 – 5016 converted or overhauled to oil lubricated lower pulley bearings per SIL T-022 but not modified with Increased Rotor Speed Kit 4230002.

† Eligible for 480 S/N 5001 – 5016 if equipped with Increased Rotor Speed Kit 4230002.

‡ Effective 480B S/N 5194 and subsequent. Retrofittable to 480 S/N 5001 – 5041, 480B S/N 5042 and subsequent.

UNCONTROLLED COPY WHEN DOWNLOADED OR PRINTED

Visit www.enstromhelicopter.com for instructions to order an original manual and to register for email notification of updates.

INTENTIONALLY LEFT BLANK

UNCONTROLLED COPY WHEN DOWNLOADED OR PRINTED

Visit www.enstromhelicopter.com for instructions to order an original manual and to register for email notification of updates.

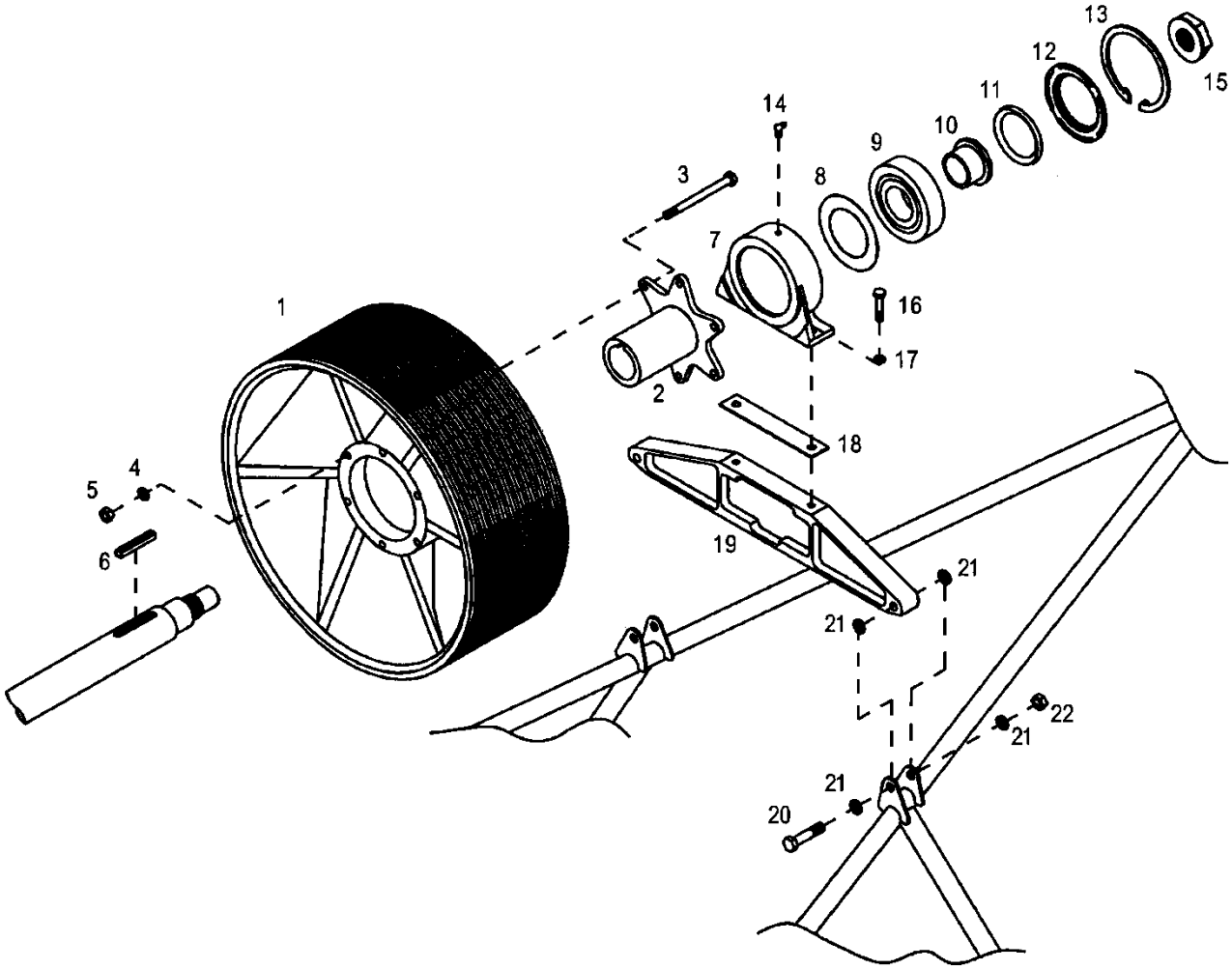

Used with Keyed Pinion M/R Transmissions

FIGURE 7-6. UPPER PULLEY ASSEMBLY (KEYED PINION)

UNCONTROLLED COPY WHEN DOWNLOADED OR PRINTED

Visit www.enstromhelicopter.com for instructions to order an original manual and to register for email notification of updates.

FIGURE 7-6. UPPER PULLEY ASSEMBLY (KEYED PINION)

ITEM NUMBER	PART NUMBER	DESCRIPTION	QTY PER ASSY	EFFECTIVITY		
				TH-28	480	480B
–	4130020-5	. Upper Pulley Assembly - Obsolete	1	X	X	
1	4130514-15	. . Pulley	1	X	X	
–	4142005-15	. . Pulley Hub Adapter	1	X	X	
2	4142010-11	. . Pulley Hub	1	X	X	
3	AN5-33A	. . Bolt	6	X	X	
4‡	NAS1149F0563P	. . Washer	6	X	X	
4	AN960-516	. . Washer (Superseded by NAS1149F0563P)	6	X	X	
5‡	MS21044N5	. . Nut	6	X	X	
5	AN364-524A	. . Nut (Superseded by MS21044N5)	6	X	X	
–*	4130020-9	. Upper Pulley Assembly	1	X	X	
1	4130514-17	. . Pulley	1	X	X	
2	4142010-11	. . Pulley Hub	1	X	X	
3	AN5-33A	. . Bolt	6	X	X	
4‡	NAS1149F0563P	. . Washer	6	X	X	
4	AN960-516	. . Washer (Superseded by NAS1149F0563P)	6	X	X	
5‡	MS21044N5	. . Nut	6	X	X	
5	AN364-524A	. . Nut (Superseded by MS21044N5)	6	X	X	
–‡•	4130060-111	. Upper Pulley Assembly	1		X	X
–**	4130030-3	. Upper Pulley Assembly (Superseded by 4130060-111)	1	X	X	X
1	4130538-11	. . Pulley	1	X	X	X
2	4142010-11	. . Pulley Hub	1	X	X	X
3	AN5-33A	. . Bolt	6	X	X	X
4‡	NAS1149F0563P	. . Washer	6	X	X	X
4	AN960-516	. . Washer (Superseded by NAS1149F0563P)	6	X	X	X
5‡	MS21044N5	. . Nut	6	X	X	X
5	AN364-524A	. . Nut (Superseded by MS21044N5)	6	X	X	X
6	28-13142-1	. Key	1	X	X	X
–‡	4130060-113	. Pinion Bearing Assembly	1		X	X
–	4130020-3	. Pinion Bearing Assembly (Superseded by 4130060-113)	1	X	X	X
7	4130501-11	. . Bearing Housing	1	X	X	X
8	28-13180-11	. . Shield	1	X	X	X
9	ECD014-11	. . Bearing	1	X	X	X
10	28-13323-11	. . Bearing Adapter	1	X	X	X
11≡	20526	. . Seal	1	X	X	X
12	28-13322-11	. . Seal Retainer	1	X	X	X

UNCONTROLLED COPY WHEN DOWNLOADED OR PRINTED

Visit www.enstromhelicopter.com for instructions to order an original manual and to register for email notification of updates.

FIGURE 7-6. UPPER PULLEY ASSEMBLY (KEYED PINION)

ITEM NUMBER	PART NUMBER	DESCRIPTION	QTY PER ASSY	EFFECTIVITY		
				TH-28	480	480B
13	N5002-354-S-PP	. . Retaining Ring	1	X	X	X
14	1911-B	. . Fitting, Grease	1	X	X	X
15	28-13184-11	. Nut	1	X	X	X
–	MS20995C41	. Safety Wire	A/R	X	X	X
16	AN4-6A	. Bolt	2	X	X	X
17†	NAS1149D0463J	. Washer	2	X	X	X
17	AN960PD416	. Washer (Superseded by NAS1149D0463J)	2	X	X	X
18	4130530-11	. Shim, .060”	1	X	X	X
19	4130511-3	. Truss Assembly	1	X	X	X
20	AN176-17A	. Bolt	2	X	X	X
21†	NAS1149F0663P	. Washer	8	X	X	X
21	AN960-616	. Washer (Superseded by NAS1149F0663P)	8	X	X	X
22†	MS21044N6	. Nut	2	X	X	X
22	AN365-624A	. Nut (Superseded by MS21044N6)	2	X	X	X

* Used with M/R Transmission P/Ns 4130020-1, -7, -101, -103.

** Used with M/R Transmission P/N 4130030-1 and P/Ns 4130060-1, -3, -103.

≡ See Appendix A for equivalent part information.

† Effectivity 480B S/N 5194 and subsequent. Retrofittable to 480 S/N 5001 – 5041, 480B S/N 5042 and subsequent.

‡ Effectivity 480B S/N 5196 and subsequent. Retrofittable to 480 S/N 5001 – 5041, 480B S/N 5042 and subsequent.

● Used with M/R Transmission P/N 4130060-107

UNCONTROLLED COPY WHEN DOWNLOADED OR PRINTED

Visit www.enstromhelicopter.com for instructions to order an original manual and to register for email notification of updates.

INTENTIONALLY LEFT BLANK

UNCONTROLLED COPY WHEN DOWNLOADED OR PRINTED

Visit www.enstromhelicopter.com for instructions to order an original manual and to register for email notification of updates.

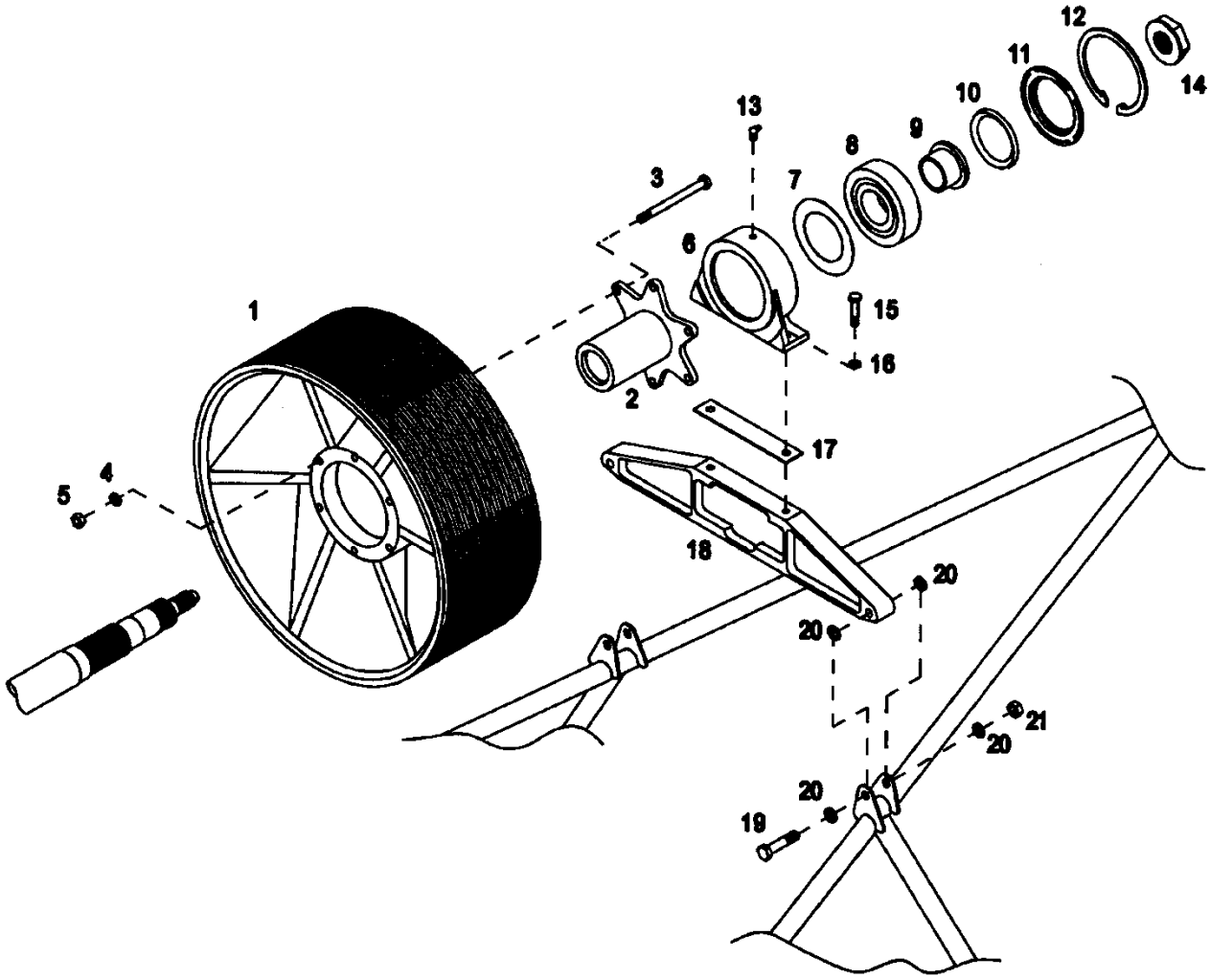

Used with Splined Pinion M/R Transmissions

FIGURE 7-6.1 UPPER PULLEY ASSEMBLY (SPLINED PINION)

UNCONTROLLED COPY WHEN DOWNLOADED OR PRINTED

Visit www.enstromhelicopter.com for instructions to order an original manual and to register for email notification of updates.

FIGURE 7-6.1. UPPER PULLEY ASSEMBLY (SPLINED PINION)

ITEM NUMBER	PART NUMBER	DESCRIPTION	QTY PER ASSY	EFFECTIVITY		
				TH-28	480	480B
–*	4130060-7	. Upper Pulley Assembly	1			X
1	4130538-11	. . Pulley	1			X
2	4142010-1	. . Pulley Hub	1			X
3	AN5-33A	. . Bolt	6			X
4●	NAS1149F0563P	. . Washer	6			X
4	AN960-516	. . Washer (Superseded by NAS1149F0563P)	6			X
5●	MS21044N5	. . Nut	6			X
5	AN364-524A	. . Nut (Superseded by MS21044N5)	6			X
–	4130060-5	. Pinion Bearing Assembly	1			X
6	4130501-11	. . Bearing Housing	1			X
7	28-13180-11	. . Shield	1			X
8	ECD014-11	. . Bearing	1			X
9	4130046-11	. . Bearing Adapter	1			X
10●	20526	. . Seal	1			X
10	92X9537	. . Seal (Superseded by 20526)	1			X
11	28-13322-11	. . Seal Retainer	1			X
12	N5002-354-S-PP	. . Retaining Ring	1			X
13	1911-B	. . Fitting, Grease	1			X
14	28-13184-11	. Nut	1			X
–	MS20995C41	. Safety Wire	A/R			X
15	AN4-6A	. Bolt	2			X
16**	NAS1149D0463J	. Washer	2			X
16	AN960PD416	. Washer (Superseded by NAS114D0463J)	2			X
17	4130530-11	. Shim, .060”	1			X
18	4130511-3	. Truss Assembly	1			X
19	AN176-17A	. Bolt	2			X
20**	NAS1149F0663P	. Washer	8			X
20	AN960-616	. Washer (Superseded by NAS1149F0663P)	8			X
21**	MS21044N6	. Nut	2			X
21	AN365-624A	. Nut (Superseded by MS21044N6)	2			X

* Used with M/R Transmission P/Ns 4130060-9, -101, -105, -109

** Effectivity 480B S/N 5194 and subsequent. Retrofittable to 480B S/N 5042 and subsequent.

● Effectivity 480B S/N 5196 and subsequent. Retrofittable to 480B S/N 5042 and subsequent.

UNCONTROLLED COPY WHEN DOWNLOADED OR PRINTED

Visit www.enstromhelicopter.com for instructions to order an original manual and to register for email notification of updates.

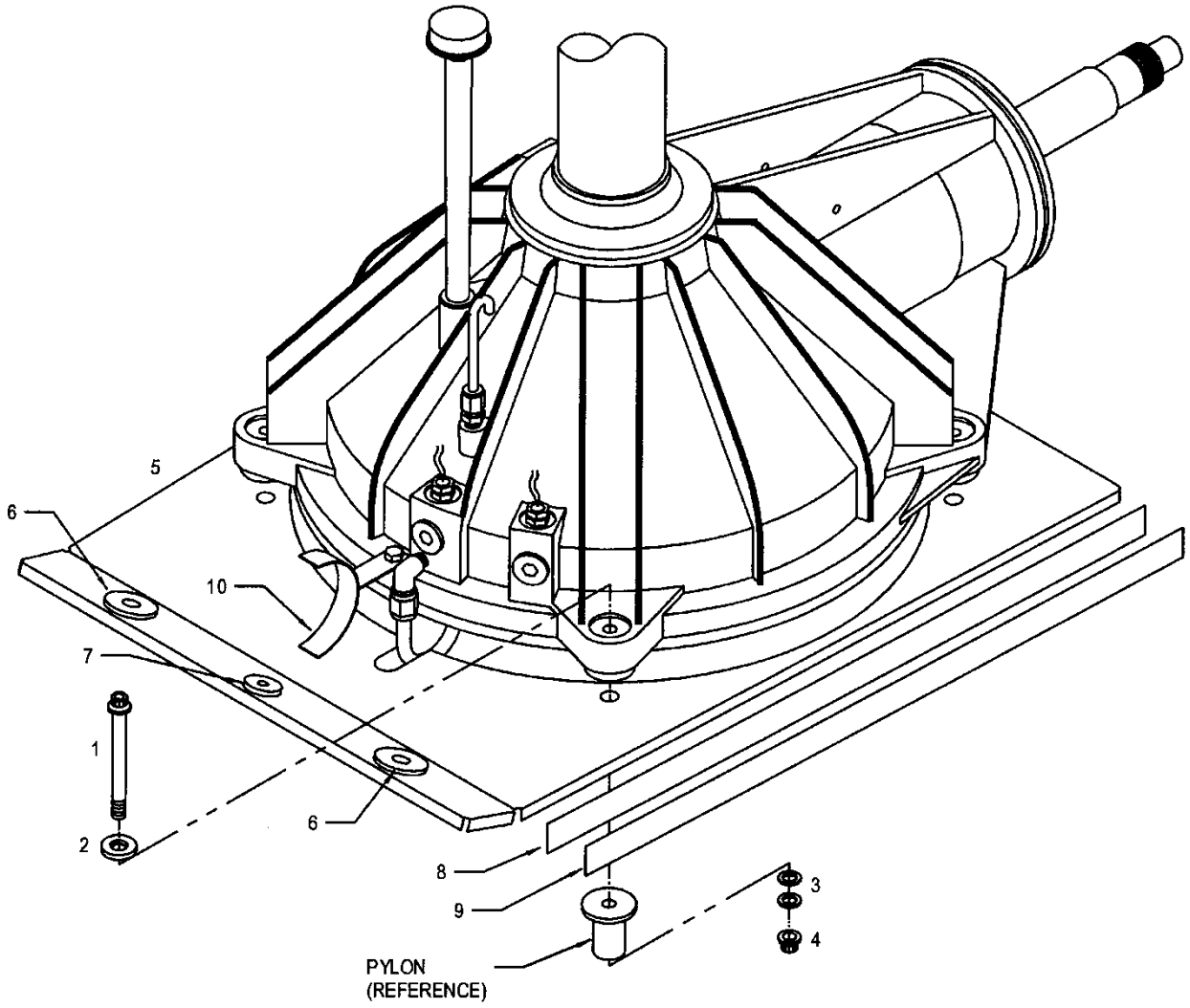

FIGURE 7-7. MAIN ROTOR TRANSMISSION INSTALLATION

UNCONTROLLED COPY WHEN DOWNLOADED OR PRINTED

Visit www.enstromhelicopter.com for instructions to order an original manual and to register for email notification of updates.

FIGURE 7-7. MAIN ROTOR TRANSMISSION INSTALLATION

ITEM NUMBER	PART NUMBER	DESCRIPTION	QTY PER ASSY	EFFECTIVITY		
				TH-28	480	480B
1	MS21250-06-048	. Bolt	4	X	X	X
2	28-13005-1	. Washer	4	X	X	X
3	AN960-616	. Washer	A/R	X	X	X
4 ≡	FN22M-624	. Nut	4	X	X	X
5*	4130402-11	. Baffle	1	X	X	
5** ●	4130402-13	. Baffle	1	X	X	X
6●	MS35489-15	. Grommet	2	X	X	X
6●	AN931-8-20	. Grommet (Alternate)	2	X	X	X
7†	MS35489-7	. Grommet	1	X	X	
7†	AN931-4-12	. Grommet (Alternate)	1	X	X	
7‡ ●	MS35489-14	. Grommet	1	X	X	X
7‡ ●	AN931-8-13	. Grommet (Alternate)	1	X	X	X
8●	SJ-3527	. Loop Fastener	A/R	X	X	X
9●	SJ-3526	. Hook Fastener	A/R	X	X	X
10+	4122045-1	. Clamp	1		X	

* Used on TH-28 S/N 3006, 480 S/Ns 5001 – 5041.

** Used on TH-28 S/N 3007 and subsequent; 480 S/N's 5042 and subsequent.

† Used with crashworthy fuel systems on TH-28 S/N 3006; 480 S/N 5001 – 5010.

‡ Used with all fuel systems on TH-28 S/N 3007 and subsequent; 480 S/N 5042 and subsequent.

\+ Used on 480 S/N 5003 only.

● Not installed on 480B, S/N 5114 and subsequent and any 480B equipped with the Increased Cooling Kit, P/N 4230031.

≡ See Appendix A for equivalent part information.

UNCONTROLLED COPY WHEN DOWNLOADED OR PRINTED

Visit www.enstromhelicopter.com for instructions to order an original manual and to register for email notification of updates.

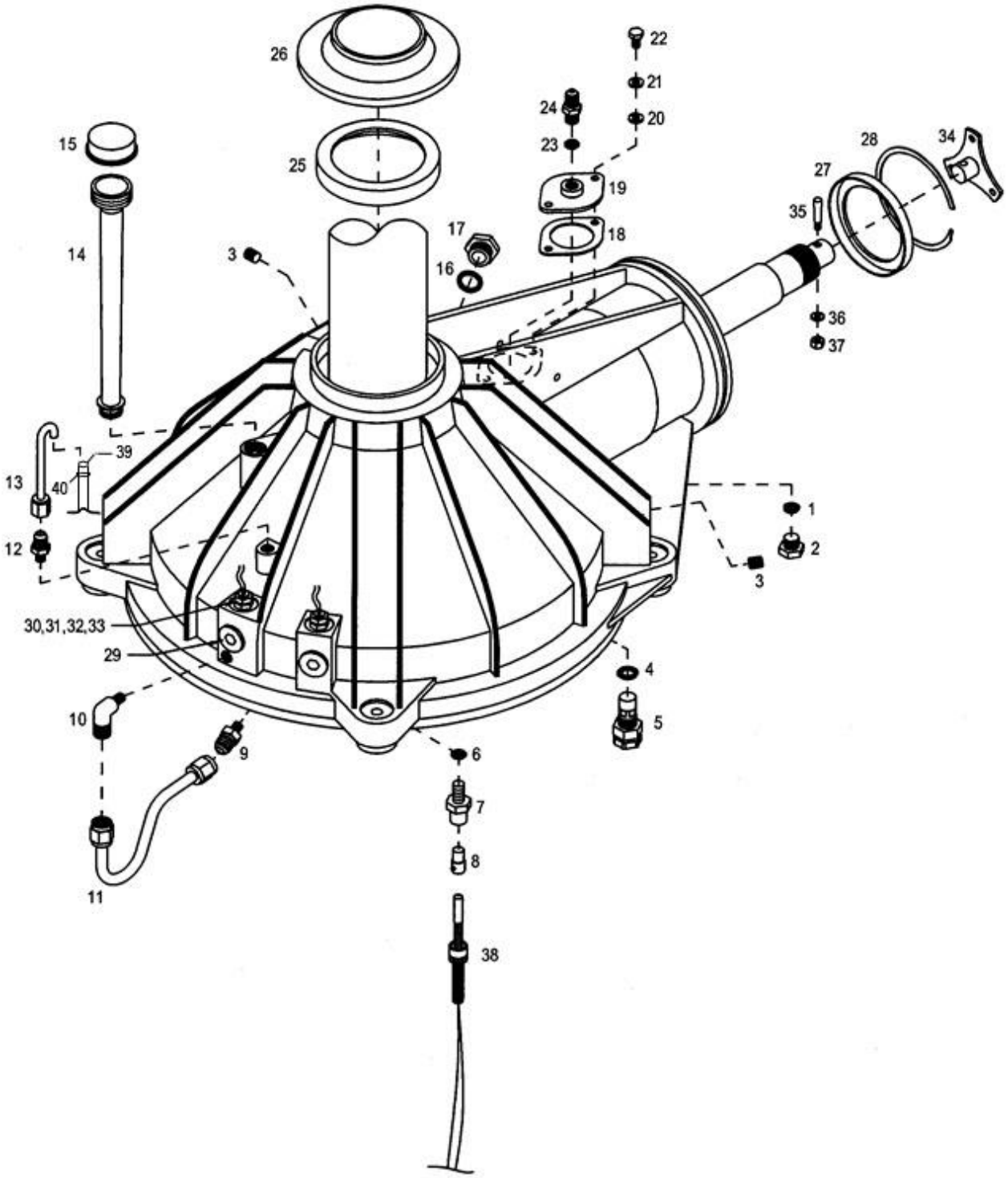

FIGURE 7-8. MAIN ROTOR TRANSMISSION ASSEMBLY (KEYED PINION)

UNCONTROLLED COPY WHEN DOWNLOADED OR PRINTED

Visit www.enstromhelicopter.com for instructions to order an original manual and to register for email notification of updates.

FIGURE 7-8. MAIN ROTOR TRANSMISSION ASSEMBLY (KEYED PINION)

ITEM NUMBER	PART NUMBER	DESCRIPTION	QTY PER ASSY	EFFECTIVITY		
				TH-28	480	480B
–	4130020-103	. Main Rotor Transmission Assembly	1	X	X	
–*	4130020-101	. Main Rotor Transmission Assembly (Alternate)	1	X	X	
–*	4130020-7	. Main Rotor Transmission Assembly (Alternate)	1	X	X	
–*	4130020-1	. Main Rotor Transmission Assembly (Alternate)	1	X	X	
–	4130060-107	. Main Rotor Transmission Assembly (See Figure 7-9 for Filtration/Cooling System Installation)	1			X
–**	4130060-103	. Main Rotor Transmission Assembly (See Figure 7-9 for Filtration/Cooling System Installation) Inactive	1			X
–	4130060-3	. Main Rotor Transmission Assembly (See Figure 7-9 for Filtration/Cooling System Installation) Inactive	1			X
–	4130030-1	. Main Rotor Transmission Assembly (See Figure 7-9 for Filtration/Cooling System Installation) (Superseded by 4130060-3) Inactive	1			X
1	AN900-6	. . Gasket	1	X	X	X
2	AN814-5DL	. . Plug	1	X	X	X
3†	AN932-3D	. . Plug	2	X	X	
4	MS35769-11	. . Gasket, Metallic	1	X	X	
5	1B7536	. . Chip Detector Assembly	1	X	X	
–	M83248/1-011	. . . O-Ring	1		X	
–	AN6227-6	. . . O-Ring (Superseded by M83248/1-011)	1	X	X	
–	21FA-540	. . . Nut	1	X	X	
6	MS35769-6	. . Gasket, Metallic	1	X	X	X
7	28-13120-1	. . Fitting Adapter	1	X	X	X
8	AN4076-1	. . Fitting Element Temp, Cylinder Head	1	X	X	X
9	AN816-6D	. . Adapter	1	X	X	X
10	MS20822-6D	. . Elbow	1	X	X	X
11‡	4130015-3	. . Line Assembly	1		X	X
11	4130015-1	. . Line Assembly (Superseded by 4130015-3)	1		X	X
–	28-13146-1	. . Vent Assembly	1	X	X	X
12	28-13148-1	. . . Vent Fitting	1	X	X	X
13	28-13149-1	. . . Line Assembly	1	X	X	X
14	35574	. . Tube, Filler, Oil	1	X	X	X
15	4142008-11	. . Cap, Gearbox Oil Fill	1	X	X	X
16	M83248/1-911	. . O-Ring (Used with 2D8934)	1	X	X	X

UNCONTROLLED COPY WHEN DOWNLOADED OR PRINTED

Visit www.enstromhelicopter.com for instructions to order an original manual and to register for email notification of updates.

FIGURE 7-8. MAIN ROTOR TRANSMISSION ASSEMBLY (KEYED PINION)

ITEM NUMBER	PART NUMBER	DESCRIPTION	QTY PER ASSY	EFFECTIVITY		
				TH-28	480	480B
16	MS28778-8	. . O-Ring (Used with 2D7310)	1	X	X	X
17◊	2D8934	. . Plug Sight	1	X	X	X
17	2D7310	. . Plug Sight	1	X	X	X
–	MS20995C32	. . Safety Wire	A/R	X	X	X
18	28-13107-15	. . Gasket: Port, Inspection	1	X	X	X
18	4130021-21	. . Gasket (Obsolete Superseded by 28-13107-15)	1	X	X	
18	4130021-25	. . Gasket (Obsolete)	1			X
19	4130021-15	. . Cover Plate (Obsolete)	1	X	X	
19	4130021-23	. . Cover Plate MRGB	1			X
20	AN960-416	. . Washer	2	X	X	X
21	AN935-416L	. . Lock Washer	2	X	X	X
22	AN4-3A	. . Bolt	2	X	X	X
23	MS28778-4	. . O-Ring	1			X
24	MS51525B4S	. . Fitting	1			X
25	13241-LDS	. . Seal (Upper Mast) Used with 4130020-1, -7, & -101)	1	X	X	
25	34256	. . Seal, Oil (Upper Mast) (Used with 4130020-103, 4130060-3, & 4130060 -107)	1	X	X	X
26	28-13137-11	. . Slinger (Used with 4130020-1, -7, & -101)	1	X	X	
26	4130052-11	. . Slinger (Used with 4130020-103 & 4130060-3)	1	X	X	X
26	4130052-13	. . Slinger (Alternate for 4130052-11 and used on 4130060-107)	1	X	X	X
27	1102	. . Seal (Pinion)	1	X	X	X
28	VH-375	. . Retaining Ring	1	X	X	X
–♦	8473RUPH5-L16	. . Seal (Mast, Lower)	2	X	X	X
–♦	1540	. . Seal (Mast, Lower, Alternate)	2	X	X	X
29	28-14368-2	. . Plug	2	X	X	X
–	MS28778-10	. . . O-Ring	1	X	X	X
30	4192509-901	. . Magnetic Pickup, 1.5 inch thread length with connector plug	2	X	X	X
30	726621	. . Magnetic Pickup, 1.5 inch thread length	2	X	X	X
30	3205A35	. . Magnetic Pickup, 3.5 inch thread length (Obsolete)	2	X	X	X
31	28-13152-13	. . Jam Nut (Used with 3205A35) (Obsolete)	2	X	X	X
–	28-13152-11	. . Spacer (Used with 3205A35) (Obsolete)	2	X	X	X
32	28-16524-3	. . Shim, .020"	A/R	X	X	X
32	28-16524-5	. . Shim, .005"	A/R	X	X	X

UNCONTROLLED COPY WHEN DOWNLOADED OR PRINTED

Visit www.enstromhelicopter.com for instructions to order an original manual and to register for email notification of updates.

FIGURE 7-8. MAIN ROTOR TRANSMISSION ASSEMBLY (KEYED PINION)

ITEM NUMBER	PART NUMBER	DESCRIPTION	QTY PER ASSY	EFFECTIVITY		
				TH-28	480	480B
33	MS28778-4	. . O-Ring	2	X	X	X
33	MS28778-3	. . O-Ring (Superseded by MS28778-4)	2	X	X	X
–	MS20995C32	. . Safety Wire	A/R	X	X	X
34	4130505-4	. . Hub	1	X	X	X
35●	AN386-2-8A	. . Taper Pin	1	X	X	X
36	AN960-10	. . Washer	1	X	X	X
37	AN365-1032A	. . Nut	1	X	X	X
38	AA86146	. Temperature Probe (Alternate)	1	X	X	X
38	AN5546-1	. Temperature Probe (Alternate)	1	X	X	X
38	102-00007	. CHT RTD Probe (Alternate)	1	X	X	X
–	28-13142-1	. Key, Pinion MRGB	1	X	X	X
39	K010-0406	. Clear PVC Tube	A/R		X	X
40	PLB2S-CO	. Cable Tie	1		X	X

* 4130020-1, 4130020-7, and 4130020-101 Main Rotor Transmissions will be overhauled to 4130020-103 configuration.

** Alternate Main Rotor Transmission for 480B, S/N 5114 and subsequent and 480B equipped with Increased Cooling Kit, P/N 4230031.

† Used on early serial number 4130020-1 Main Rotor Transmissions.

‡ Effectivity 480B S/N 5203 and subsequent. Retrofittable to 480 S/N 5001 – 5041, 480B S/N 5042 and subsequent.

● AN386-2-8A taper pin may be replaced by 28-13623-11, -13. -15, or -17 as needed.

♦ See Figure 7-8.2 for illustration.

◊ Used with 4130005-101 housing. Effective S/N 5112 and subsequent.

UNCONTROLLED COPY WHEN DOWNLOADED OR PRINTED

Visit www.enstromhelicopter.com for instructions to order an original manual and to register for email notification of updates.

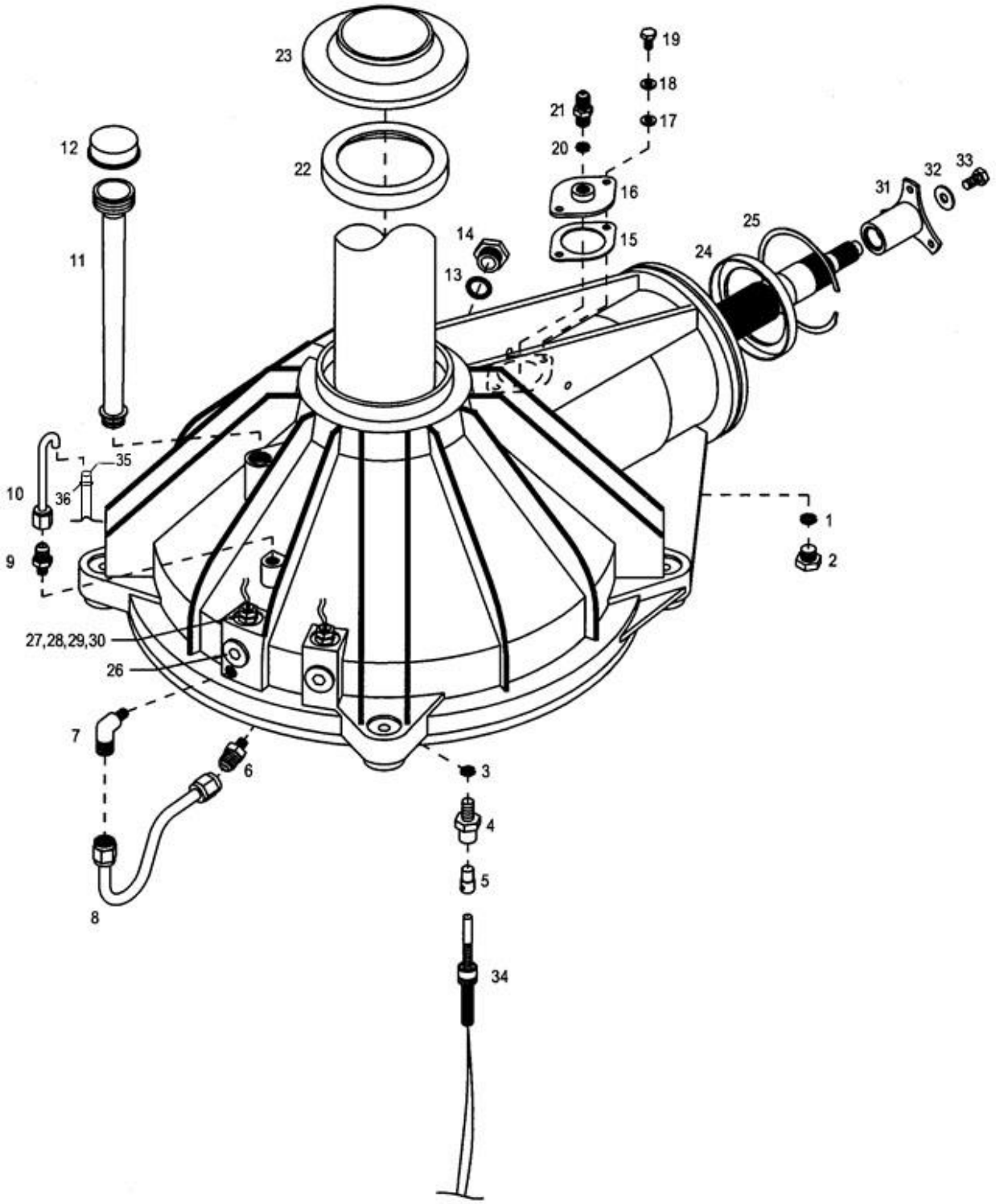

FIGURE 7-8.1 MAIN ROTOR TRANSMISSION ASSEMBLY (SPLINED PINION)

UNCONTROLLED COPY WHEN DOWNLOADED OR PRINTED

Visit www.enstromhelicopter.com for instructions to order an original manual and to register for email notification of updates.

FIGURE 7-8.1. MAIN ROTOR TRANSMISSION ASSEMBLY (SPLINED PINION)

ITEM NUMBER	PART NUMBER	DESCRIPTION	QTY PER ASSY	EFFECTIVITY		
				TH-28	480	480B
–	4130060-109	. Main Rotor Transmission Assembly (See Figure 7-9 for Filtration/Cooling System Installation)	REF			X
–♦	4130060-115	. . Main Rotor Transmission Sub-Assembly	1			X
–*	4130060-105	. Main Rotor Transmission Assembly (See Figure 7-9 for Filtration/Cooling System Installation) Inactive	REF			X
–	4130060-101	. Main Rotor Transmission Assembly (See Figure 7-9 for Filtration/Cooling System Installation) Inactive	REF			X
–	4130060-9	. Main Rotor Transmission Assembly (Alternate) See Figure 7-9 for Filtration/ Cooling System Installation (Inactive)	REF			X
1	AN900-6	. . Gasket	1			X
2	AN814-5DL	. . Plug	1			X
3	MS35769-6	. . Gasket, Metallic	1			X
4	28-13120-1	. . Fitting Adapter	1			X
5	AN4076-1	. . Fitting Element Temp, Cylinder Head	1			X
6	AN816-6D	. . Adapter	1			X
7	MS20822-6D	. . Elbow	1			X
8**	4130015-3	. . Line Assembly	1			X
8	4130015-1	. . Line Assembly (Superseded by 4130015-3)	1			X
–	28-13146-1	. . Vent Assembly	1			X
9	28-13148-1	. . . Vent Fitting	1			X
10	28-13149-1	. . . Line Assembly	1			X
11	35574	. . Oil Fill Neck	1			X
12	4142008-11	. . Cap, Gearbox Oil Fill	1			X
13	M93248/1-911	. . O-Ring (Used with 2D8934)	1			X
13	MS28778-8	. . O-Ring (Used with 2D7310)	1			X
14▲	2D8934	. . Plug, Sight	1			X
14	2D7310	. . Plug, Sight	1			X
–	MS20995C32	. . Safety Wire	A/R			X
15	28-13107-15	. . Gasket; Port, Inspection	1			X
15	4130021-25	. . Gasket (Obsolete replaced with 28-13107-15)	1			X
16	4130021-23	. . Cover Plate MRGB	1			X
17	AN960-416	. . Washer	2			X
18	AN935-416L	. . Lock Washer	2			X
19	AN4-3A	. . Bolt	2			X

UNCONTROLLED COPY WHEN DOWNLOADED OR PRINTED

Visit www.enstromhelicopter.com for instructions to order an original manual and to register for email notification of updates.

FIGURE 7-8.1. MAIN ROTOR TRANSMISSION ASSEMBLY (SPLINED PINION)

ITEM NUMBER	PART NUMBER	DESCRIPTION	QTY PER ASSY	EFFECTIVITY		
				TH-28	480	480B
20	MS28778-4	. . O-Ring	1			X
21	MS51525B4S	. . Fitting	1			X
22	34256	. . Seal, Oil (Upper Mast)	1			X
23	4130052-13	. . Slinger	1			X
24	1102	. . Seal (Pinion)	1			X
25	VH-375	. . Retaining Ring	1			X
–†	8473H5L16	. . Seal (Mast, Lower)	2			X
–†	1540	. . Seal (Mast, Lower, Alternate)	2			X
26	28-14368-2	. . Plug	2			X
–	MS28778-10	. . . O-Ring	1			X
27	4192509-901	. . Magnetic Pickup, 1.5 inch thread length with connector plug	2			X
27	726621	. . Magnetic Pickup, 1.5 inch thread length	2			X
27	3205A35	. . Magnetic Pickup, 3.5 inch thread length (Obsolete)	2			X
28	28-13152-13	. . Jam Nut (Used with 3205A35) (Obsolete)	2			X
–	28-13152-11	. . Spacer (Used with 3205A35) (Obsolete)	2			X
29	28-16524-3	. . Shim, .020"	A/R			X
29	28-16524-5	. . Shim, .005"	A/R			X
30	MS28778-4	. . O-Ring	2			X
–	MS20995C32	. . Safety Wire	A/R			X
31	4130533-1	. . Tail Rotor Coupling	1			X
32	4130533-15	. . Washer	1			X
33	AN5-4A	. . Bolt	1			X
34	AA86146	. Temperature Probe (Alternate)	1			X
34	AN5546-1	. Temperature Probe (Alternate)	1			X
34	102-00007	. CHT RTD Probe (Alternate)	1			X
35	K010-0406	. Clear PVC Tube	A/R			X
36	PLB2S-CO	. Cable Tie	1			X

* Used on 480B, S/N 5114 and subsequent and 480B equipped with Increased Cooling Kit, P/N 4230031.

** Effectivity 480B S/N 5203 and Subsequent. Retrofittable to 480B S/N 5042 and subsequent.

† See figure 7-8.2 for illustration.

♦ Order 4130060-115-R for exchange/overhaul transmission (excludes cooling installation, and bearing housing, and pulley assemblies). Include bearing housing (Item 9, Figure 7-6.1) with the returned transmission.

▲ Used with 4130005-101 gearbox housing. Effective S/N 5112 and subsequent.

UNCONTROLLED COPY WHEN DOWNLOADED OR PRINTED

Visit www.enstromhelicopter.com for instructions to order an original manual and to register for email notification of updates.

INTENTIONALLY LEFT BLANK

UNCONTROLLED COPY WHEN DOWNLOADED OR PRINTED

Visit www.enstromhelicopter.com for instructions to order an original manual and to register for email notification of updates.

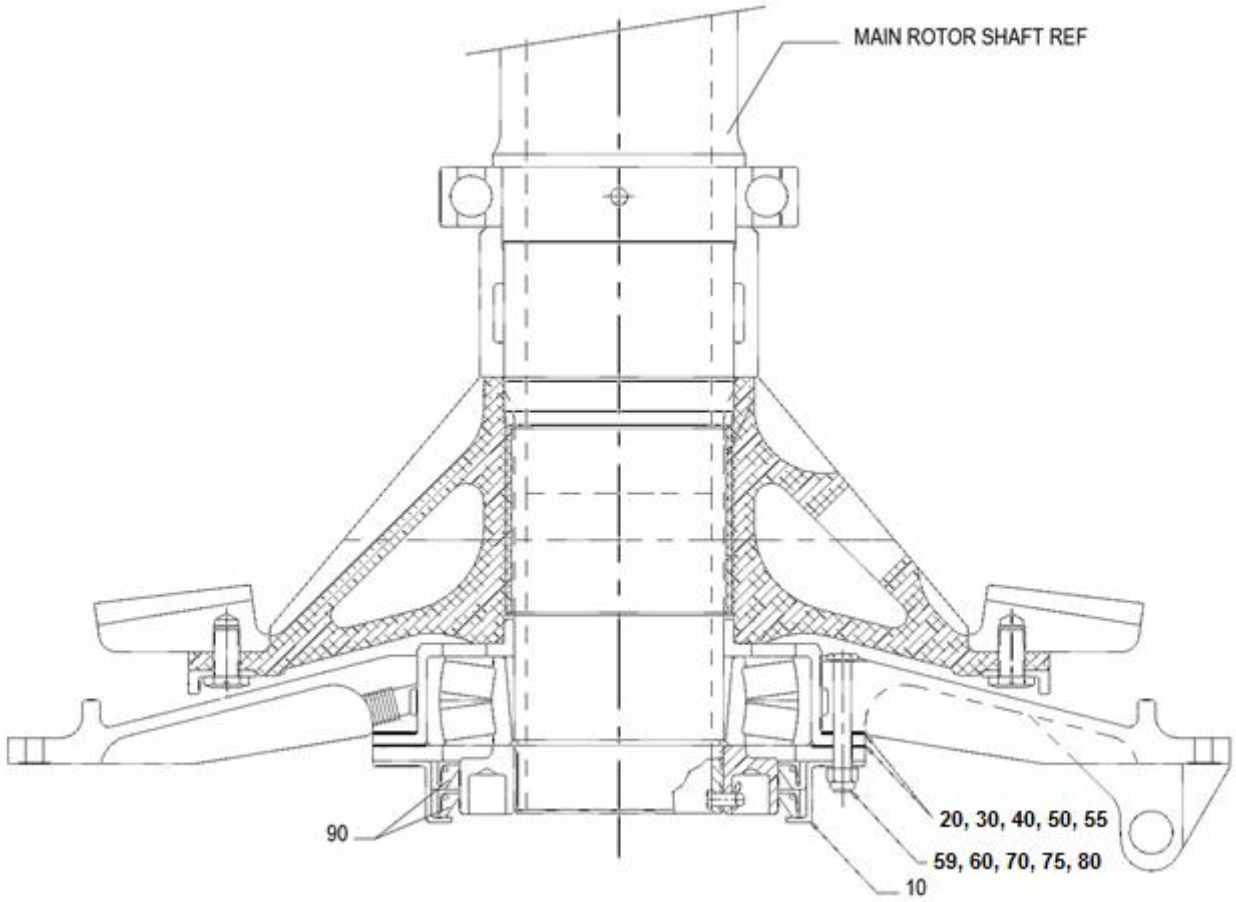

FIGURE 7-8.2 MAIN ROTOR TRANSMISSION SEAL RETAINER ASSEMBLY

UNCONTROLLED COPY WHEN DOWNLOADED OR PRINTED

Visit www.enstromhelicopter.com for instructions to order an original manual and to register for email notification of updates.

FIGURE 7-8.2. MAIN ROTOR TRANSMISSION SEAL RETAINER ASSEMBLY

ITEM NUMBER	PART NUMBER	DESCRIPTION	QTY PER ASSY	EFFECTIVITY		
				TH-28	480	480B
10	28-13122-3	. Retainer Seal	1	X	X	X
–†	28-13122-993	. Seal Retainer Assembly	1	X	X	X
20	4130008-1	. Shim, MRGB 0.001” (Amber)	A/R	X	X	X
30	4130008-2	. Shim, MRGB 0.002” (Red)	A/R	X	X	X
40	4130008-3	. Shim, MRGB 0.003” (Green)	A/R	X	X	X
50	4130008-10	. Shim, MRGB 0.010” (Brown)	A/R	X	X	X
55	4130008-20	. Shim, MRGB 0.020” (Yellow)	A/R	X	X	X
59	AN4-17A	. Bolt	1	X	X	X
60	NAS1523-4E	. Stat-O-Seal	16	X	X	X
70*	AN960-4L	. Washer (Superseded by NAS1523-4E)	16	X	X	X
75♦	NAS1149F0432P	. Washer	16	X	X	X
80	AN365-428A	. Nut	16	X	X	X
90	8473H5L16	. Seal (Mast, Lower)	2	X	X	X
90	1540	. Seal (Mast, Lower, Alternate)	2	X	X	X

* Use under AN365-428A nut.

♦ Use between nut and stat-o-seal washer.

† Includes Item 90 (quantity 2) bonded into the retainer.

UNCONTROLLED COPY WHEN DOWNLOADED OR PRINTED

Visit www.enstromhelicopter.com for instructions to order an original manual and to register for email notification of updates.

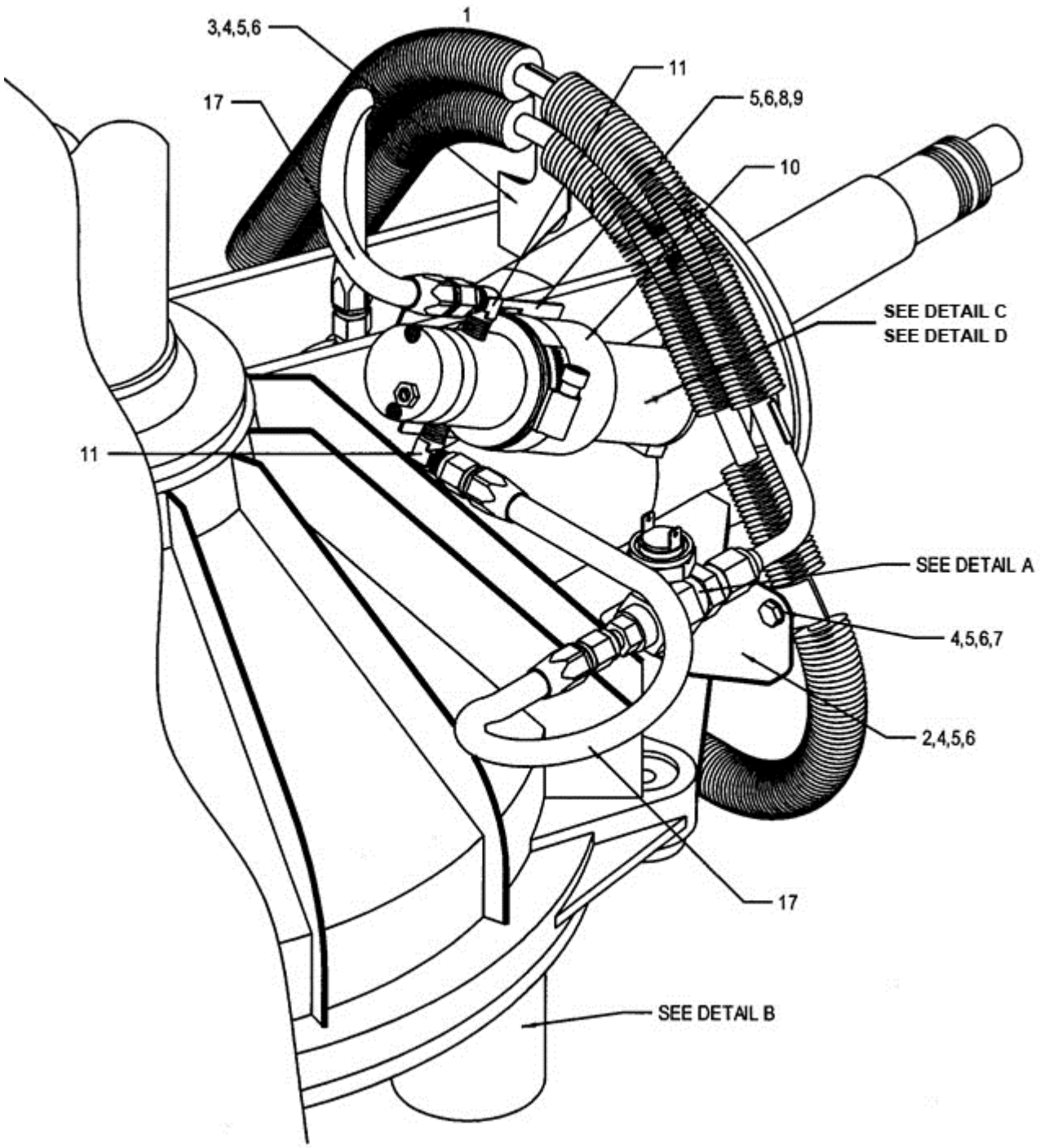

Sheet 1 of 2

FIGURE 7-9. MAIN ROTOR TRANSMISSION FILTRATION/COOLING SYSTEM

UNCONTROLLED COPY WHEN DOWNLOADED OR PRINTED

Visit www.enstromhelicopter.com for instructions to order an original manual and to register for email notification of updates.

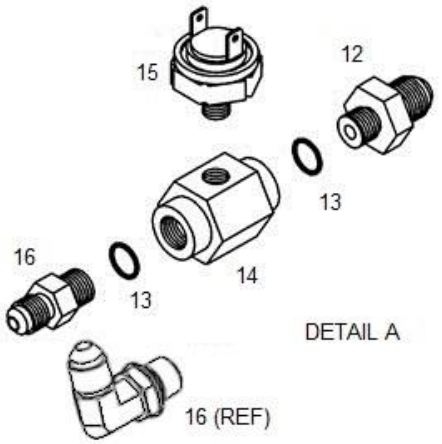

DETAIL A

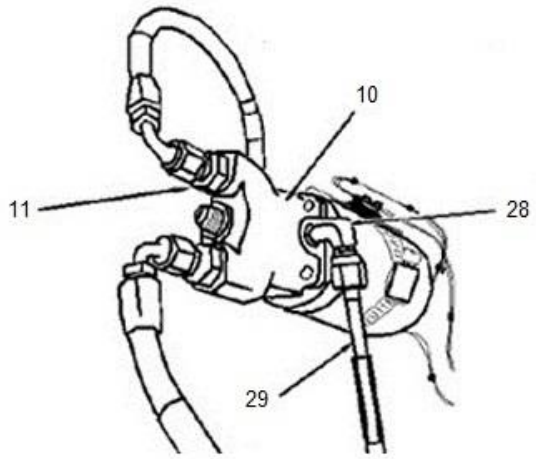

DETAIL C

(S/N 5114 THROUGH S/N 5245)

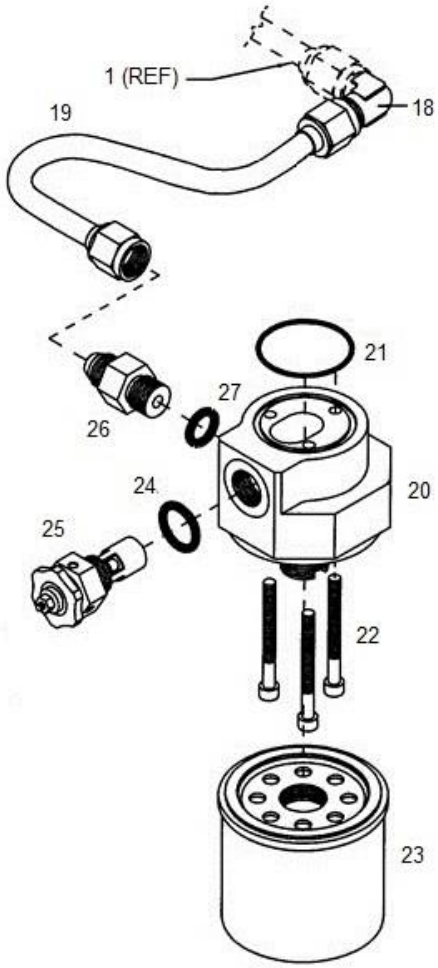

DETAIL B

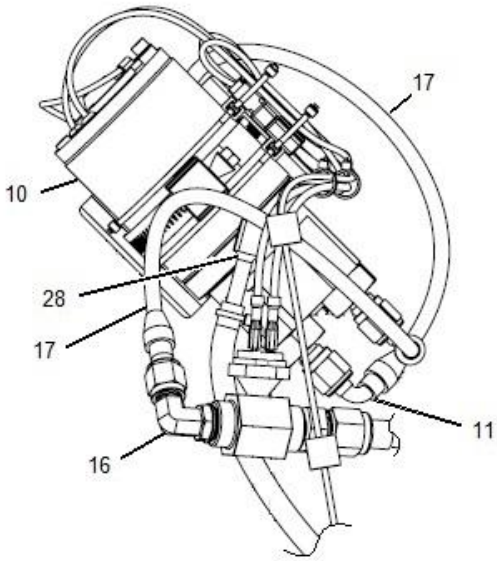

DETAIL D

(S/N 5246 AND SUBSEQUENT)

Sheet 2 of 2

FIGURE 7-9. MAIN ROTOR TRANSMISSION FILTRATION/COOLING SYSTEM

UNCONTROLLED COPY WHEN DOWNLOADED OR PRINTED

Visit www.enstromhelicopter.com for instructions to order an original manual and to register for email notification of updates.

FIGURE 7-9. MAIN ROTOR TRANSMISSION FILTRATION/COOLING SYSTEM

ITEM NUMBER	PART NUMBER	DESCRIPTION	QTY PER ASSY	EFFECTIVITY		
				TH-28	480	480B
–◊	4130040-9	. Filtration/Cooling System (Used with 4130060-103, -105, & -109 Main Rotor Transmissions)	1			X
–*	4130040-7	. Filtration/Cooling System (Inactive) (Used with 4130060-103, -105, & -109 Main Rotor Transmissions)	1			X
–	4130040-5	. Filtration/Cooling System (Used with 4130060-101 Main Rotor Transmissions)	1			X
–	4130040-1	. Filtration/Cooling System (Used with 4130030-1 and 4130060-3 & -9 Main Rotor Transmissions)	1			X
1	ECD4069-1	. . Finned Cooling Tube Assembly	1			X
2	4130034-19	. . Mount Bracket Left Side (Used with 4130040-5, -7 & -9)	1			X
2	4130034-15	. . Mount Bracket Left Side (Used with 4130040-1)	1			X
2	4130034-17	. . Mount Bracket Right Side (Used with 4130040-5, -7 & -9)	1			X
2	4130034-11	. . Mount Bracket Right Side (Used with 4130040-1)	1			X
3	4130034-21	. . Mount Bracket Top (Used with 4130040-5, -7 & -9)	1			X
3	4130034-13	. . Mount Bracket Top (Used with 4130040-1)	1			X
4	AN3-6A	. . Bolt	2			X
4	AN3-11A	. . Bolt (Superseded by AN3-6A)	6			X
4	AN3-7A	. . Bolt	4			X
4	AN3-10A	. . Bolt (Superseded by AN3-7A)	1			X
5	NAS1149F0332P	. . Washer	6			X
5	NAS1149F0363P	. . Washer	6			X
5	AN960-10L	. . Washer (Superseded by NAS1149F0332P & NAS1149F0363P)	22			X
6	MS21083N3	. . Nut	6			X
6	AN364-1032A	. . Nut (Superseded by MS21083N3)	11			X
7	AN3-5A	. . Bolt	3			X
8◊	4130038-11	. . Mount Bracket Assembly	1			X
8	4130033-1	. . Mount Bracket Assembly	1			X
–**	ECD111-11	. . . Clamp	1			X
–**	MS35842-13	. . . Clamp (Alternate)	1			X
–	MM-46-70	. . . Clamp (Superseded by MS35842-13)	1			X
–	MS20995C32	. . . . Safety Wire	A/R			X
9	AN525-10R10	. . Screw (Used with 4130038-11)	1			X

UNCONTROLLED COPY WHEN DOWNLOADED OR PRINTED

Visit www.enstromhelicopter.com for instructions to order an original manual and to register for email notification of updates.

FIGURE 7-9. MAIN ROTOR TRANSMISSION FILTRATION/COOLING SYSTEM

ITEM NUMBER	PART NUMBER	DESCRIPTION	QTY PER ASSY	EFFECTIVITY		
				TH-28	480	480B
9	AN525-10R12	. . Screw (Upper)	1			X
9	AN525-10R14	. . Screw (Lower)	1			X
10◊	4130039-1	. . Pump, Oil (Used with 4130040-9)	1			X
10†	4192508-939	. . Pump, Oil (Used with 4130040-7)	1			X
–	8116-B	. . . Pump: Oil Transmission	1			X
–	1-480319-0	. . . Housing: Cap, 2p Pin Contact	1			X
–	60620-1	. . . Contact, Pin, 20-14 AWG	2			X
10‡	4130036-5	. . Pump & Motor Assembly Used with 4130040-1 & -5)	1			X
–	K10712	. . . Pump: Cooler, M.R.G.B. Oil	1			X
–	MS35265-15	. . . Screw, Mach (Flh), 4-40 X 0.38 dh	3			X
–	4130033-17	. . . Plug	1			X
11	4-8 F5OX-S	. . Fitting (Used with 4130040-9)	2			X
–	MS28778-8	. . . O-Ring	1			X
11	MS51525-6-4	. . Fitting, Straight (Used with 4192508-939)	2			X
–	MS28775-013	. . O-Ring (Used with 4192508-939)	2			X
11	MS20822-4J	. . Elbow (Used with 4130036-5)	2			X
–	4130035-13	. . Reducer	1			X
12	6-4 F5OX-S	. . Fitting	1			X
13	MS28778-4	. . O-Ring	2			X
14	4130035-11	. . Tee Fitting	1			X
15	77345-09.0HG-01	. . Pressure Switch	1			X
15	9253	. . Pressure Switch (Superseded by 77345-09.0HG-01)	1			X
16	MS51527B4S	. . Fitting (Used with 4130040-9)	1			X
16	MS51525B4S	. . Fitting	1			X
17	4130032-9	. . Line Assembly (Used with 4130040-9)	2			X
17	4130032-5	. . Line Assembly (Inactive) (Used with 4130040-7)	2			X
17	4130032-3	. . Line Assembly (Used with 4130040-1 & -5)	2			X
18	6EBTX-SS	. . Elbow	1			X
19	4130032-1	. . Line Assembly	1			X
20	4130031-1	. . Filter Housing Assembly	1			X
21	2-029	. . O-Ring	1			X
21	MS28775-029	. . O-Ring (Alternate)	1			X
22	NAS1351-3H32	. . Cap Screw	3			X
23	HP-1003	. . Filter	1			X
24	MS35769-11	. . Gasket	1			X

UNCONTROLLED COPY WHEN DOWNLOADED OR PRINTED

Visit www.enstromhelicopter.com for instructions to order an original manual and to register for email notification of updates.

FIGURE 7-9. MAIN ROTOR TRANSMISSION FILTRATION/COOLING SYSTEM

ITEM NUMBER	PART NUMBER	DESCRIPTION	QTY PER ASSY	EFFECTIVITY		
				TH-28	480	480B
24	AN900-10	. . Gasket (Alternate)	1			X
25	K203RA	. . Chip Detector Assembly	1			X
–	M83248/1-011	. . . O-Ring	1			X
–	AN6227-6	. . . O-Ring (Superseded by M83248/1-011)	1			X
–	21FA-540	. . . Nut	1			X
26	DT-370-MOMF-5	. . Check Valve	1			X
27	MS28778-6	. . O-Ring	1			X
28	18050-42	. . Elbow (Used with 4130040-9)	1			X
28♦	MS20822-4D	. . Elbow	1			X
–▲	1/8 X 1/16 FG-S	. . Adapter	1			X
29♦	4130032-7	. . Drain Line Assembly	1			X

*	Used on 480B, S/N 5114 and subsequent and 480 equipped with Increased Cooling Kit, P/N 4230031.
**	Effectivity 480B S/N 5155 and subsequent. Retrofittable to 480B S/N 5042 and subsequent.
†	For replacement, refer to SIL T-070.
‡	For replacement, refer to SIL T-063 Revision 1, or later revision.
◊	Effectivity 480B S/N 5246 and subsequent. Retrofittable to 480B S/N 5039 and subsequent via SIL T-063 Revision 1 or SIL T-070, as applicable (See Note symbols † and ‡).
♦	Used with 4130040-7 or installed per SIL T-063.
▲	Installed per SIL T-063 Revision 1 or SIL T-070.

UNCONTROLLED COPY WHEN DOWNLOADED OR PRINTED

Visit www.enstromhelicopter.com for instructions to order an original manual and to register for email notification of updates.

INTENTIONALLY LEFT BLANK

UNCONTROLLED COPY WHEN DOWNLOADED OR PRINTED

Visit www.enstromhelicopter.com for instructions to order an original manual and to register for email notification of updates.

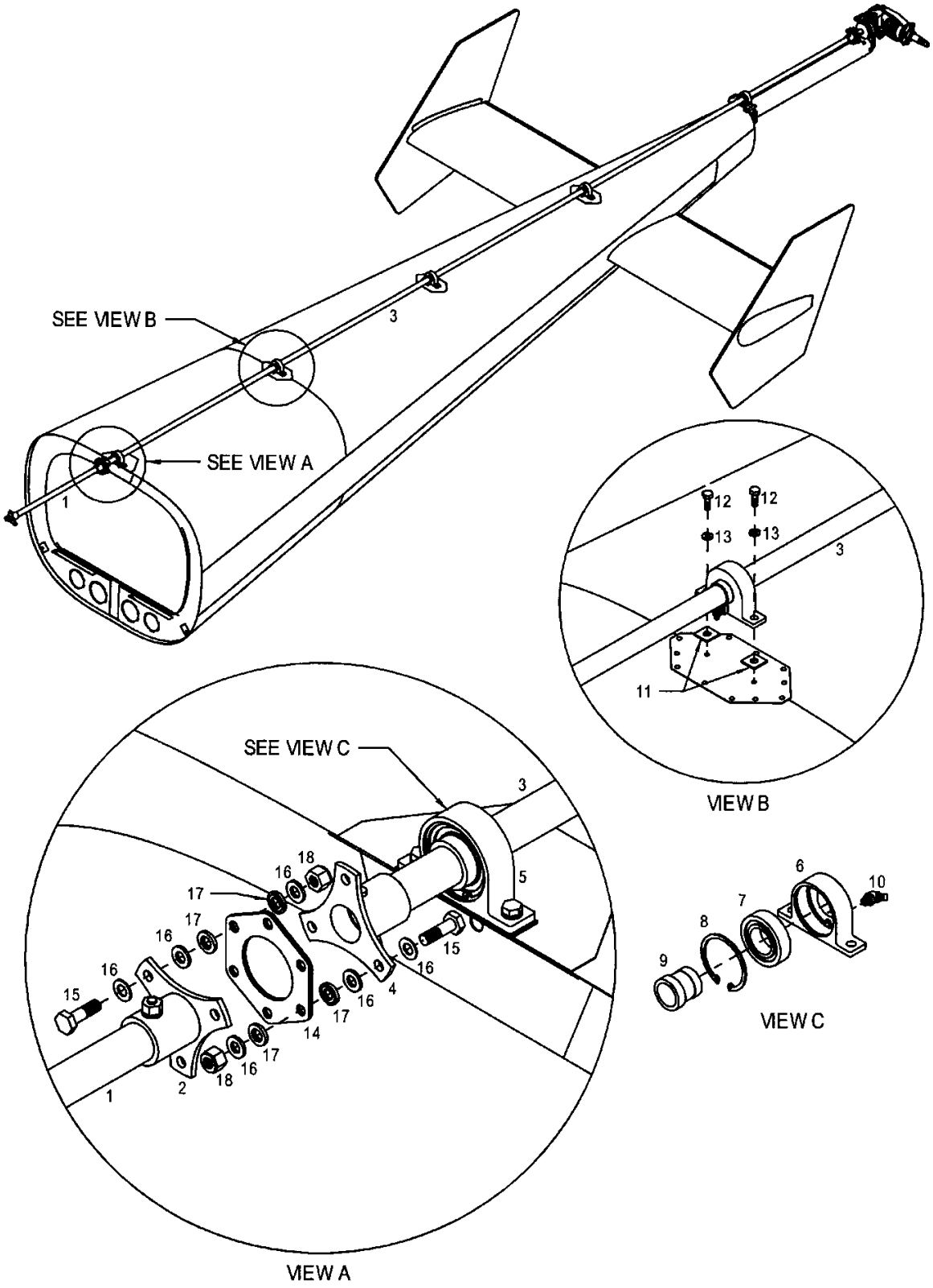

FIGURE 7-10. TAIL ROTOR DRIVE SHAFT INSTALLATION

UNCONTROLLED COPY WHEN DOWNLOADED OR PRINTED

Visit www.enstromhelicopter.com for instructions to order an original manual and to register for email notification of updates.

FIGURE 7-10. TAIL ROTOR DRIVE SHAFT INSTALLATION

ITEM NUMBER	PART NUMBER	DESCRIPTION	QTY PER ASSY	EFFECTIVITY		
				TH-28	480	480B
1	4136000-903	. Shaft Assembly (Used with 4130020 -1, -7, -101, -103; 4130030-1; and 4130060 -1, -3, -103, -107 Main Rotor Transmissions)	1	X	X	X
1	4136000-907	. Shaft Assembly, Short (Used with 4130060 -9, -101, -105, -109 Main Rotor Transmissions)	1			X
2	4130505-8	. . Coupling, Tail Rotor Drive Shaft	2	X	X	X
–	AN386-2-9A	. . Taper Pin	2	X	X	X
–	AN975-3	. . Washer, Taper Pin	2	X	X	X
–	AN364-1032A	. . Nut	2	X	X	X
3	4136000-902	. Shaft Assembly, Long	1	X	X	X
4	4130505-8	. . Coupling, Tail Rotor Drive Shaft	2	X	X	X
–	AN386-2-9A	. . Taper Pin	2	X	X	X
–	AN975-3	. . Washer, Taper Pin	2	X	X	X
–	AN364-1032A	. . Nut	2	X	X	X
5	4136000-913	. Bearing Housing Assembly	5	X	X	X
6*	28-13611-15	. . Bearing Housing	1		X	X
6	28-13611-13	. . Bearing Housing (Superseded by 28-13611-15)	1	X	X	X
7	ECD015-11	. . Bearing	1	X	X	X
8	N5000-187-S-PP	. . Retaining Ring	1	X	X	X
9	4136002-15	. . Bushing, Rubber	1	X	X	X
10	1637-B	. . Grease Fitting	1	X	X	X
11	28-13605-4	. Shim, .007"	A/R	X	X	X
11	28-13605-5	. Shim, .020"	A/R	X	X	X
11	28-13605-6	. Shim, .032"	A/R	X	X	X
11	28-13605-7	. Shim, .063"	A/R	X	X	X
11	28-13605-8	. Shim, .025"	A/R	X	X	X
12	AN3-5A	. Bolt	8	X	X	X
12	AN3H5A	. Bolt (Used on Aft Bearing Housing)	2	X	X	X
–	MS20995C32	. Safety Wire	A/R	X	X	X
13	AN960-10	. Washer	10	X	X	X
14	ECD4025-1	. Flex Pack	3	X	X	X
15	AN4-7A	. Bolt	18	X	X	X
15	AN4H7A	. Bolt (Forward Hub, 4136000-907 only)	1	X	X	X
–	MS20995C41	. Safety Wire	A/R	X	X	X

UNCONTROLLED COPY WHEN DOWNLOADED OR PRINTED

Visit www.enstromhelicopter.com for instructions to order an original manual and to register for email notification of updates.

FIGURE 7-10. TAIL ROTOR DRIVE SHAFT INSTALLATION

ITEM NUMBER	PART NUMBER	DESCRIPTION	QTY PER ASSY	EFFECTIVITY		
				TH-28	480	480B
16	AN960C416L	. Washer	A/R	X	X	X
16	AN960C416	. Washer	A/R	X	X	X
17	28-13621-13	. Flex Coupling Washer	36	X	X	X
18	AN365-428A	. Nut	18	X	X	X

* Effectivity 480B S/N 5209 and subsequent. Retrofittable to 480 S/N 5001 – 5041, 480B S/N 5042 and subsequent.

UNCONTROLLED COPY WHEN DOWNLOADED OR PRINTED

Visit www.enstromhelicopter.com for instructions to order an original manual and to register for email notification of updates.

INTENTIONALLY LEFT BLANK

UNCONTROLLED COPY WHEN DOWNLOADED OR PRINTED

Visit www.enstromhelicopter.com for instructions to order an original manual and to register for email notification of updates.

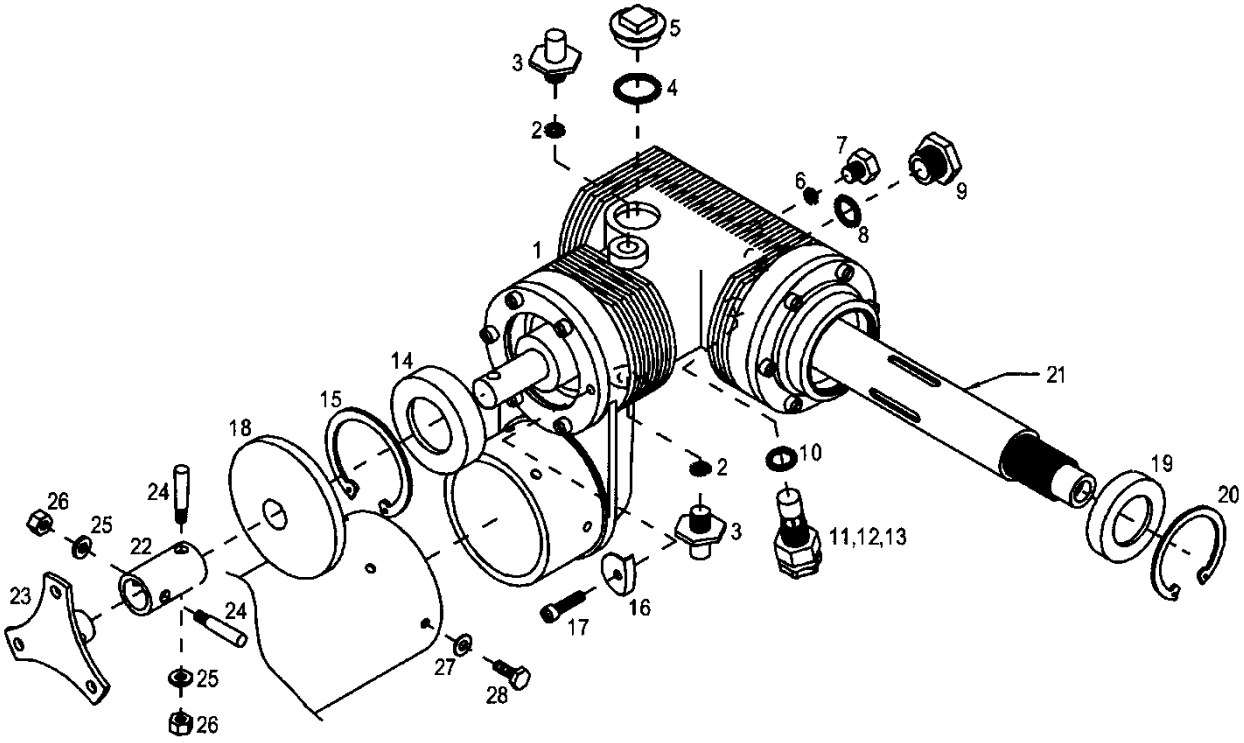

FIGURE 7-11. TAIL ROTOR TRANSMISSION ASSEMBLY

UNCONTROLLED COPY WHEN DOWNLOADED OR PRINTED

Visit www.enstromhelicopter.com for instructions to order an original manual and to register for email notification of updates.

FIGURE 7-11. TAIL ROTOR TRANSMISSION ASSEMBLY

ITEM NUMBER	PART NUMBER	DESCRIPTION	QTY PER ASSY	EFFECTIVITY		
				TH-28	480	480B
1	28-13525-9	. Tail Rotor Gear Box Assembly	1	X	X	X
2	MS28778-3	. . O-Ring	2	X	X	X
3	28-135003-11	. . Bolt	2	X	X	X
4	2-018	. . O-Ring	1	X	X	X
4	MS28775-018	. . O-Ring (Alternate)	1	X	X	X
5	28-13515-3	. . Plug	1	X	X	X
6	MS28778-2	. . O-Ring (Alternate)	1	X	X	X
7	AN814-2DL	. . Plug	1	X	X	X
8	AN6227-11	. . O-Ring	1	X	X	X
8	MS28775-113	. . O-Ring (Alternate)	1	X	X	X
9	S83BZ-2	. . Sight Plug	1	X	X	X
10	AN900-8	. . Gasket	1	X	X	X
10	MS35769-9	. . Gasket (Alternate)	1	X	X	X
11	K94RA	. . Chip Detector	1	X	X	X
12	M83248/1-008	. . . O-Ring	1	X	X	X
12	AN6227-3	. . . O-Ring (Superseded by M83248/1-008)	1	X	X	X
12	MS28775-008	. . . O-Ring (Alternate)	1	X	X	X
13	21FA-540	. . . Nut	1	X	X	X
14	1539-001	. . Seal	1	X	X	X
15	N5000-206-PP	. . Retaining Ring	1	X	X	X
16*	28-13531-11	. . Tab	2	X	X	X
17	AN502-10-12	. . Screw (Reference)	2	X	X	X
18	28-16399-11	. . Slinger	1	X	X	X
19	28-13532-11	. . Seal	1	X	X	X
20	N5000-175-PP	. . Retaining Ring	1	X	X	X
21	28-13511-11	. . Spacer	1	X	X	X
21**	28-13511-13	. . Spacer (Alternate to 28-13511-11)	1	X	X	X
22	28-13607-1	. . Sleeve	1	X	X	X
23	4130505-4	. . Hub	1	X	X	X
24●	AN386-2-7A	. . Taper Pin	2	X	X	X
25	AN960-10	. . Washer	2	X	X	X
26	AN365-1032A	. . Nut	2	X	X	X
26	AN364-1032A	. . Nut (Alternate to AN365-1032A)	2	X	X	X
27	AN960-10L	. Washer	7	X	X	X

UNCONTROLLED COPY WHEN DOWNLOADED OR PRINTED

Visit www.enstromhelicopter.com for instructions to order an original manual and to register for email notification of updates.

FIGURE 7-11. TAIL ROTOR TRANSMISSION ASSEMBLY

ITEM NUMBER	PART NUMBER	DESCRIPTION	QTY PER ASSY	EFFECTIVITY		
				TH-28	480	480B
28	AN3H-3A	. Bolt	7	X	X	X
–	28-13145-1	. Placard	1	X	X	X

* Only used when tail rotor transmission is not equipped with the retaining ring, Item 15.

** Effectivity S\N 5085 and subsequent.

● AN386-2-7A may be replaced by 28-13623-25, -27, -29, and -31 as required.

UNCONTROLLED COPY WHEN DOWNLOADED OR PRINTED

Visit www.enstromhelicopter.com for instructions to order an original manual and to register for email notification of updates.

SECTION 8

ROTOR SYSTEMS

UNCONTROLLED COPY WHEN DOWNLOADED OR PRINTED

Visit www.enstromhelicopter.com for instructions to order an original manual and to register for email notification of updates.

INTENTIONALLY LEFT BLANK

UNCONTROLLED COPY WHEN DOWNLOADED OR PRINTED

Visit www.enstromhelicopter.com for instructions to order an original manual and to register for email notification of updates.

SECTION 8 – TABLE OF CONTENTS

	Cover	8-1
	Table of Contents	8-1.2
8-1	Main Rotor Hub Assembly - Grease Lubricated	8-2
8-2	Main Rotor Hub Assembly - Oil Lubricated	8-6
8-3	Main Rotor Blade and Retention Assembly	8-10
8-4	Retention Assembly/Flapping Pin Installation	8-16
8-5	Hydraulic Damper Assembly	8-18
8-6	Main Rotor Damper Installation	8-22
8-7	Tail Rotor Assembly	8-24

UNCONTROLLED COPY WHEN DOWNLOADED OR PRINTED

Visit www.enstromhelicopter.com for instructions to order an original manual and to register for email notification of updates.

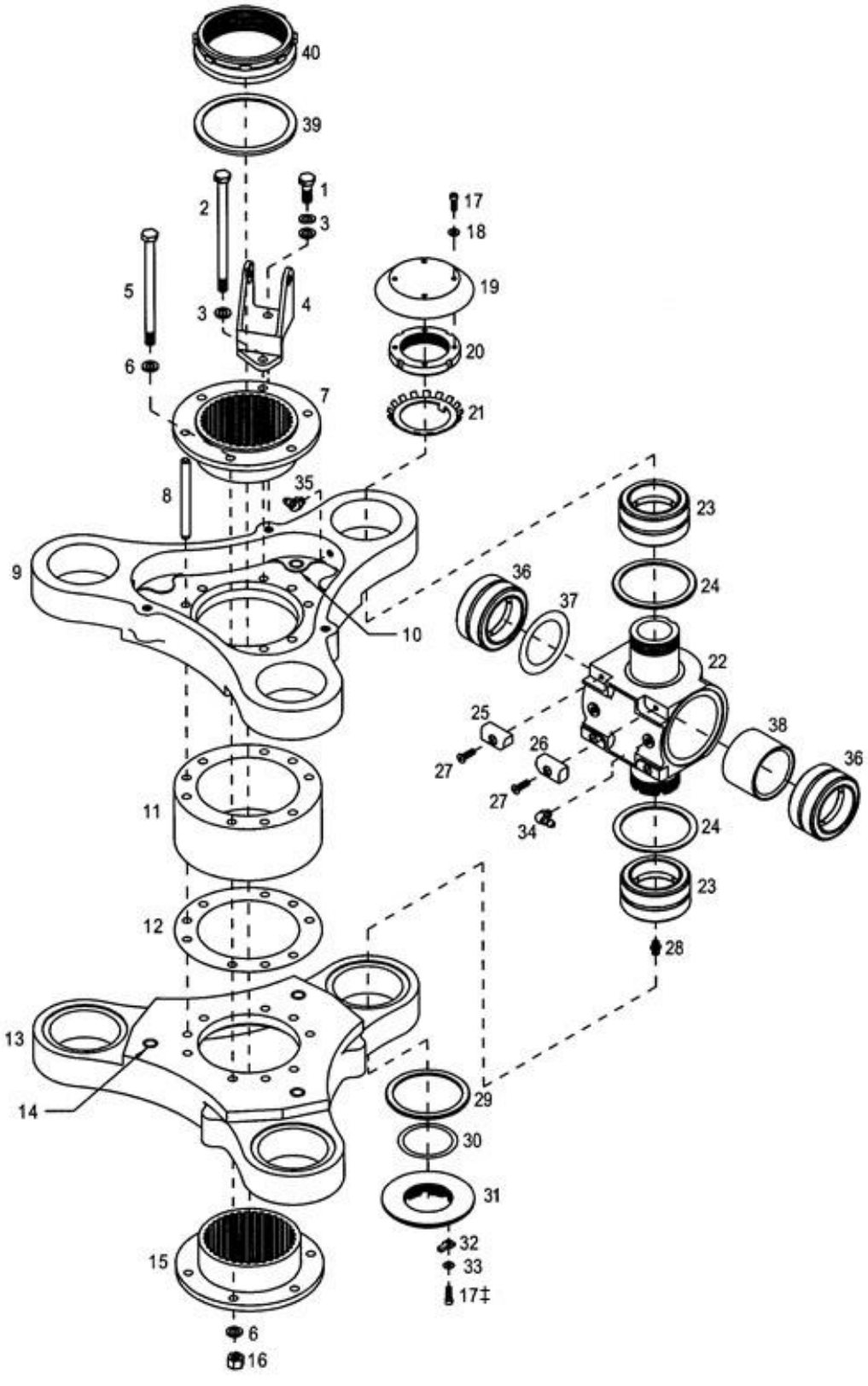

FIGURE 8-1. MAIN ROTOR HUB ASSEMBLY – GREASE LUBRICATED

UNCONTROLLED COPY WHEN DOWNLOADED OR PRINTED

Visit www.enstromhelicopter.com for instructions to order an original manual and to register for email notification of updates.

FIGURE 8-1. MAIN ROTOR HUB ASSEMBLY – GREASE LUBRICATED

ITEM NUMBER	PART NUMBER	DESCRIPTION	QTY PER ASSY	EFFECTIVITY		
				TH-28	480	480B
–●	28-14219-7	. Hub Center Section Assembly	1	X	X	
–*	28-14219-3	. Hub Center Section Assembly (Superseded by 28-14219-7)	1	X	X	
1	AN5H-6A	. . Bolt	3	X	X	
2●●	AN5H-45A	. . Bolt	3	X	X	
2	AN5H-46A	. . Bolt (Superseded by AN5H-45A)	9	X	X	
3♦	NAS1149D0563H	. . Washer	9	X	X	
3†●●	AN960D516L	. . Washer (Superseded by NAS1149D0563H)	12	X	X	
3	AN960D516	. . Washer (Superseded by AN960D516L)	6	X	X	
4	28-14202-1	. . Bracket Assembly	3	X	X	
–	28-14250-1	. . . Flanged Bushing	2	X	X	
5●●	AN5-43A	. . Bolt	3	X	X	
5	AN5-44A	. . Bolt (Superseded by AN5-43A)	3	X	X	
6♦	NAS1149F0563P	. . Washer	6		X	
6♦	NAS1149F0532P	. . Washer (Under head of AN5-43A)	3		X	
6●●	AN960-516L	. . Washer (Superseded by NAS1149F0563P)	18	X	X	
6	AN960-516	. . Washer (Superseded by AN960-516L)	21	X	X	
7	28-14224-1	. . Shaft Adapter	1	X	X	
8	28-14244-1	. . Pin	3	X	X	
9●	28-14280-3	. . Hub Plate, Upper (Used with 28-14219-3 and Hydraulic Damper, 28-14375-107)	1	X	X	
9●	28-14280-5	. . Hub Plate, Upper (Used with 28-14219-7 and Hydraulic Damper, 28-14375-103)	1	X	X	
10	28-14252-1	. . . Bushing (Used with 28-14280-3)	3	X	X	
10	28-14359-11	. . . Bushing (Used with 28-14280-5)	3	X	X	
11	28-14223-1	. . Hub Spacer	1	X	X	
12	28-14290-3	. . Shim, .001"	A/R	X	X	
12	28-14290-5	. . Shim, .002"	A/R	X	X	
12	28-14290-7	. . Shim, .004"	A/R	X	X	
12	28-14290-9	. . Shim, .0075"	A/R	X	X	
13●	28-14281-3	. . Hub Plate, Lower (Used with 28-14219-3 and Hydraulic Damper, 28-14375-107)	1	X	X	
13●	28-14281-5	. . Hub Plate, Lower (Used with 28-14219-7 and Hydraulic Damper, 28-14375-103)	1	X	X	
14	28-14252-1	. . . Bushing (Used with 28-14281-3)	3	X	X	
14	28-14359-19	. . . Bushing (Used with 28-14281-5)	3	X	X	
15	28-14224-3	. . Shaft Adapter (Used with Main Rotor Transmission, P/N 4130020-1, -7, & -101)	1	X	X	

UNCONTROLLED COPY WHEN DOWNLOADED OR PRINTED

Visit www.enstromhelicopter.com for instructions to order an original manual and to register for email notification of updates.

FIGURE 8-1. MAIN ROTOR HUB ASSEMBLY – GREASE LUBRICATED

ITEM NUMBER	PART NUMBER	DESCRIPTION	QTY PER ASSY	EFFECTIVITY		
				TH-28	480	480B
15	28-14224-5	. . Shaft Adapter (Used with Main Rotor Transmission, P/N 4130020-103)	1	X	X	
16♦	MS21044N5	. . Nut	6		X	
16	AN365-524A	. . Nut (Superseded by MS20144N5)	6	X	X	
17 ≡	NK-500-8R6	. . Screw	12	X	X	
17‡♦	NK-500-8R5	. . Screw	3		X	
18♦	NAS1149DN816J	. . Washer	12		X	
18	AN960D8	. . Washer (Superseded by NAS1149DN816J)	12	X	X	
19	28-14228-1	. . Dust Cap	3	X	X	
20	28-14227-1	. . Lock Nut	3	X	X	
21	W-09	. . Lock Washer	3	X	X	
–	28-14219-901	. . Universal Block Assembly	3	X	X	
22♦♦ ○	28-14117-11	. . . Universal Block	1	X	X	
22○	28-14117-1	. . . Universal Block (Superseded by 28-14117-11)	1	X	X	
23	ECD092-1	. . . Bearing	2	X	X	
23	28NBC2040YZP	. . . Bearing (Alternate)	2	X	X	
24	28-14236-1	. . . Thrust Washer	2	X	X	
25	28-14251-1	. . . Pad – Stop L.H.	2	X	X	
26	28-14251-2	. . . Pad – Stop R.H.	2	X	X	
27	NK-510-10R10	. . . Screw	4	X	X	
28	1641-B	. . . Grease Fitting	1	X	X	
28	MS15001-1	. . . Grease Fitting (Alternate to 1641-B)	1	X	X	
29	28-14236-1	. . Thrust Washer	3	X	X	
30	28-14006-3	. . Shim, .001"	A/R	X	X	
30	28-14006-5	. . Shim, .002"	A/R	X	X	
30	28-14006-7	. . Shim, .004"	A/R	X	X	
30	28-14006-9	. . Shim, .005"	A/R	X	X	
30	28-14006-11	. . Shim, .010"	A/R	X	X	
30	28-14006-13	. . Shim, .015"	A/R	X	X	
30	28-14006-15	. . Shim, .020"	A/R	X	X	
30	28-14006-17	. . Shim, .025"	A/R	X	X	
30	28-14006-19	. . Shim, .030"	A/R	X	X	
31	28-14256-1	. . Thrust Nut	3	X	X	
32	28-14257-1	. . Lock Key	3	X	X	
33♦	NAS1149FN832P	. . Washer	3		X	
33	AN960-8L	. . Washer (Superseded by NAS1149FN832P)	3	X	X	
34	1911-B	. . Fitting, Grease	6	X	X	
35	1637-B	. . Fitting, Grease	6	X	X	

UNCONTROLLED COPY WHEN DOWNLOADED OR PRINTED

Visit www.enstromhelicopter.com for instructions to order an original manual and to register for email notification of updates.

FIGURE 8-1. MAIN ROTOR HUB ASSEMBLY – GREASE LUBRICATED

ITEM NUMBER	PART NUMBER	DESCRIPTION	QTY PER ASSY	EFFECTIVITY		
				TH-28	480	480B
36**	ECD092-1	. Bearing: Rlr. 1.750 Needle. Greased	6	X	X	
36	28NBC2040YZP	. Bearing (Alternate)	6	X	X	
37	28-14009-1	. Shim, .001"	A/R	X	X	
37	28-14009-2	. Shim, .002"	A/R	X	X	
37	28-14009-3	. Shim, .003"	A/R	X	X	
37	28-14009-5	. Shim, .005"	A/R	X	X	
38	28-14235-1	. Spacer	3	X	X	
39	28-14008-1	. Hub Spacer	1	X	X	
40	28-14004-1	. Retention Nut	1	X	X	

* Useable on TH-28, S/N 3004 and subsequent, and 480, S/N 5001 thru 5041.

** Third Flapping Bearing Kit, P/N 4230024-1, eligible for installation.

● Effectivity 480/480B S/N 5095 and subsequent.

† One (1) washer under the head, three (3) under the nut.

≡ See Appendix A for equivalent part information.

●● Effectivity 480/480B S/N 5140 and subsequent.

♦ Effectivity 480B S/N 5212 and subsequent. Retrofittable to 480 S/N 5001 – 5041, 480B S/N 5042 and subsequent.

▌ ♦♦ Retrofittable to 480 S/N 5001 – 5041.

▌ ○ Available as a remanufactured part. Add an “R” to the end of the part number when ordering.

UNCONTROLLED COPY WHEN DOWNLOADED OR PRINTED

Visit www.enstromhelicopter.com for instructions to order an original manual and to register for email notification of updates.

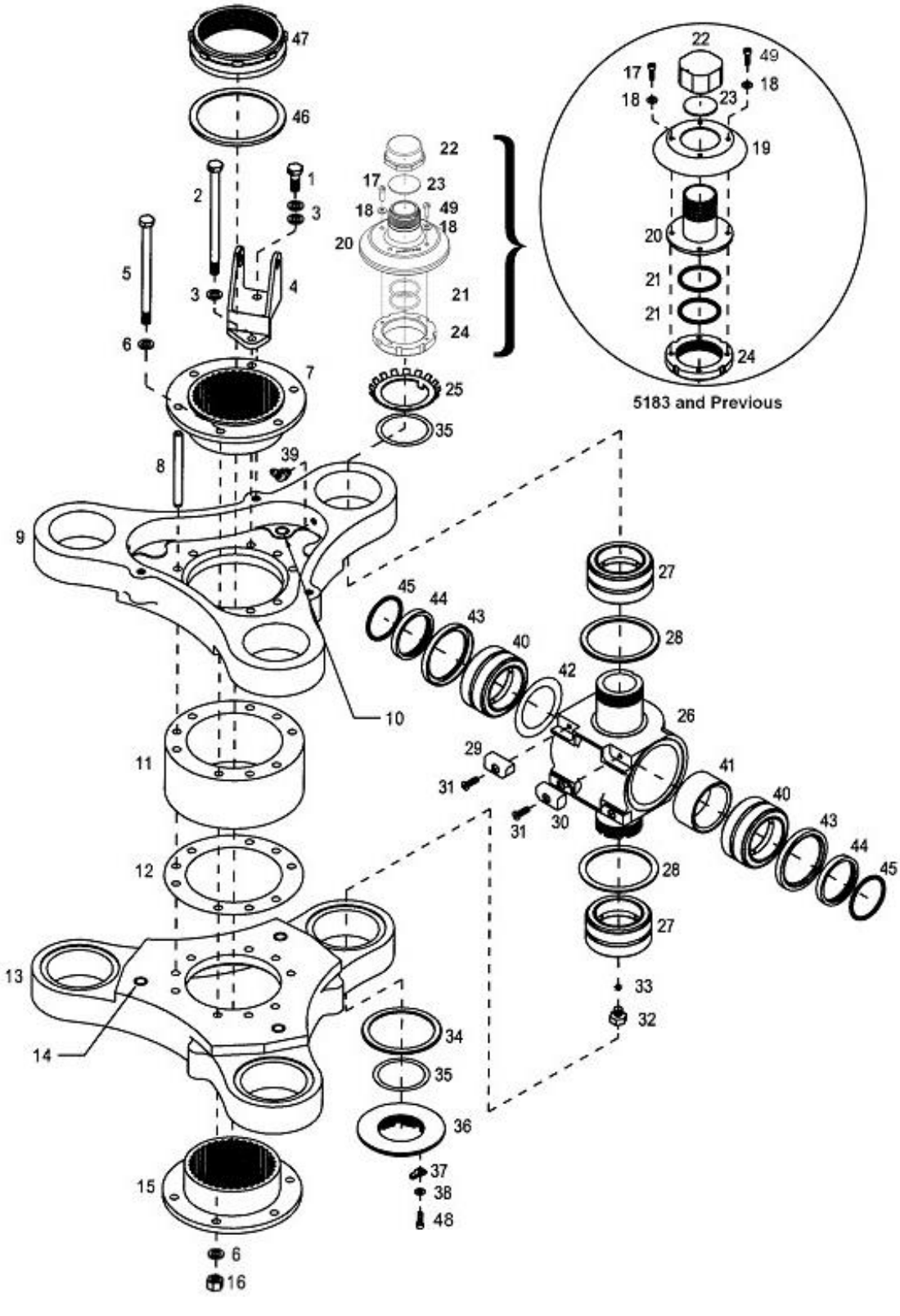

FIGURE 8-2. MAIN ROTOR HUB ASSEMBLY – OIL LUBRICATED

UNCONTROLLED COPY WHEN DOWNLOADED OR PRINTED

Visit www.enstromhelicopter.com for instructions to order an original manual and to register for email notification of updates.

FIGURE 8-2. MAIN ROTOR HUB ASSEMBLY – OIL LUBRICATED

ITEM NUMBER	PART NUMBER	DESCRIPTION	QTY PER ASSY	EFFECTIVITY		
				TH-28	480	480B
–*	28-14219-5	. Hub Center Section Assembly	1		X	X
1	AN5H-6A	. . Bolt	3		X	X
2●	AN5H-45A	. . Bolt	3		X	X
2	AN5H-46A	. . Bolt (Superseded by AN5H-45A)	9		X	X
3♦	NAS1149D0563H	. . Washer	9		X	X
3†♦	AN960D516L	. . Washer (Superseded by NAS1149D0563H)	9		X	X
3†	AN960D516	. . Washer (Superseded by AN960D516L)	9		X	X
4	28-14202-1	. . Bracket Assembly	3		X	X
–	28-14250-1	. . . Flanged Bushing	2		X	X
5●	AN5-43A	. . Bolt	3		X	X
5	AN5-44A	. . Bolt (Superseded by AN5-43A)	3		X	X
6♦	NAS1149F0563P	. . Washer	6		X	X
6‡♦	NAS1149F0532P	. . Washer	3		X	X
6††	AN960-516L	. . Washer (Superseded by NAS1149F0563P)	3		X	X
6● **	AN960-516	. . Washer	18		X	X
7	28-14224-1	. . Shaft Adapter	1		X	X
8	28-14244-1	. . Pin	3		X	X
9	28-14280-5	. . Hub Plate, Upper	1		X	X
10	28-14359-11	. . . Bushing	3		X	X
11	28-14223-1	. . Hub Spacer	1		X	X
12	28-14290-3	. . Shim, .001"	A/R		X	X
12	28-14290-5	. . Shim, .002"	A/R		X	X
12	28-14290-7	. . Shim, .004"	A/R		X	X
12	28-14290-9	. . Shim, .0075"	A/R		X	X
13	28-14281-5	. . Hub Plate, Lower	1		X	X
14	28-14359-19	. . . Bushing	3		X	X
15	28-14224-5	. . Shaft Adapter	1		X	X
16♦	MS21044N5	. . Nut	6		X	X
16	AN365-524A	. . Nut (Superseded by MS21044N5)	6		X	X
17≡	NK-500-8R8	. . Screw	9		X	X
18♦	NAS1149DN816J	. . Washer	12		X	X
18	AN960D8	. . Washer (Superseded by NAS1149DN816J)	12		X	X
19	4143013-17	. . Dust Cover (Replaced by 4143012-35)	3		X	X
20▲	4143012-35	. . Oil Reservoir (Replaces 4143012-7 and 4143012-17)	3		X	X
20	4143012-7	. . Oil Reservoir (Superseded by 4143012-35)	3		X	X
20	4143012-5	. . Oil Reservoir (Obsolete)	3		X	X

UNCONTROLLED COPY WHEN DOWNLOADED OR PRINTED

Visit www.enstromhelicopter.com for instructions to order an original manual and to register for email notification of updates.

FIGURE 8-2. MAIN ROTOR HUB ASSEMBLY – OIL LUBRICATED

ITEM NUMBER	PART NUMBER	DESCRIPTION	QTY PER ASSY	EFFECTIVITY		
				TH-28	480	480B
21	MS28775-024	. . . O-Ring	6		X	X
22●●	4143012-101	. . Cover (Used with 4143012-35)	3		X	X
22	4143012-9	. . Cover (Used with 4143012-7) Superseded by 4143012-101	3		X	X
22	4143012-21	. . Cover (Used with 4143012-5) Obsolete	3		X	X
23	4143012-31	. . . Seal (Used with 4143012-9 and -101)	3		X	X
23	2-212	. . O-Ring (Used with 4143012-5) (Obsolete)	3		X	X
24	28-14227-1	. . Lock Nut	3		X	X
25	W-09	. . Lock Washer	3		X	X
–	28-14219-903	. . Universal Block Assembly	3		X	X
26	28-14117-13	. . . Universal Block	1		X	X
27	ECD092-1	. . . Bearing	2		X	X
27	28NBC2040YZP	. . . Bearing (Alternate)	2	X	X	
28	28-14236-1	. . . Thrust Washer	2		X	X
29	28-14251-1	. . . Pad – Stop, L.H.	2		X	X
30	28-14251-2	. . . Pad – Stop, R.H.	2		X	X
31	NK-510-10R10	. . . Screw	4		X	X
32	AN814-2D	. . Plug	3		X	X
33 ≡	NAS1612-2A	. . O-Ring	3		X	X
34	28-14236-1	. . Thrust Washer	3		X	X
35	28-14006-3	. . Shim, .001"	A/R		X	X
35	28-14006-5	. . Shim, .002"	A/R		X	X
35	28-14006-7	. . Shim, .004"	A/R		X	X
35	28-14006-9	. . Shim, .005"	A/R		X	X
35	28-14006-11	. . Shim, .010"	A/R		X	X
35	28-14006-13	. . Shim, .015"	A/R		X	X
35	28-14006-15	. . Shim, .020"	A/R		X	X
35	28-14006-17	. . Shim, .025"	A/R		X	X
35	28-14006-19	. . Shim, .030"	A/R		X	X
36	28-14256-1	. . Thrust Nut	3		X	X
37	28-14257-1	. . Lock Key	3		X	X
38♦	NAS1149FN832P	. . Washer	3		X	X
38	AN960-8L	. . Washer (Superseded by NAS1149FN832P)	3		X	X
39	1637-B	. . Grease Fitting	6		X	X
40	ECD092-3	. Bearing	6		X	X
41	4143011-11	. Spacer	3		X	X
42	28-14009-1	. Shim, .001"	A/R		X	X

UNCONTROLLED COPY WHEN DOWNLOADED OR PRINTED

Visit www.enstromhelicopter.com for instructions to order an original manual and to register for email notification of updates.

FIGURE 8-2. MAIN ROTOR HUB ASSEMBLY – OIL LUBRICATED

ITEM NUMBER	PART NUMBER	DESCRIPTION	QTY PER ASSY	EFFECTIVITY		
				TH-28	480	480B
42	28-14009-2	. Shim, .002"	A/R		X	X
42	28-14009-3	. Shim, .003"	A/R		X	X
42	28-14009-5	. Shim, .005"	A/R		X	X
42	28-14009-10	. Shim, .010"	A/R		X	X
42	28-14009-15	. Shim, .015"	A/R		X	X
43	19754	. Seal	6		X	X
44	4143011-13	. Sleeve	6		X	X
45	2-032	. O-Ring (V747-75 Material)	6		X	X
45 ≡	M83248/1-032	. O-Ring (Alternate)	6		X	X
46	28-14008-1	. Hub Spacer	1		X	X
47	28-14004-1	. Retention Nut	1		X	X
48≡	NK-500-8R5	. Screw, Nylok	3		X	X
49	AN503-8-8	. Screw, Mach (Flh), 8-32 X 0.500	3		X	X

* 480 model aircraft must have Main Rotor Transmission, P/N 4130020-103, installed.

† Number of washers varies with bolt length.

One (1) washer under the head when used with bolts AN5H-45A and AN5H-46A, three (3) under the nut.

Two (2) washers under the head when used with bolt AN5H-6A.

†† Use one (1) washer under the head.

** For 480/480B S/N 5139 and prior, the quantity is eighteen (18).

For 480/480B S/N 5140 and subsequent, the quantity is six (6).

≡ See Appendix A for equivalent part information.

● Effectivity 480/480B S/N 5140 and subsequent.

●● Effectivity 480B S/N 5172 and subsequent. Retrofittable to 480 S/N 5001 to 5041 and 480B S/N 5042 and subsequent.

▲ Effectivity 480B S/N 5184 and subsequent. Retrofittable to 480 S/N 5001 to 5041 and 480B S/N 5042 and subsequent.

‡ Use with AN5-43A Bolt under head.

♦ Effectivity 480B S/N 5212 and subsequent. Retrofittable to 480 S/N 5001 – 5042 and 480B S/N 5042 and subsequent.

UNCONTROLLED COPY WHEN DOWNLOADED OR PRINTED

Visit www.enstromhelicopter.com for instructions to order an original manual and to register for email notification of updates.

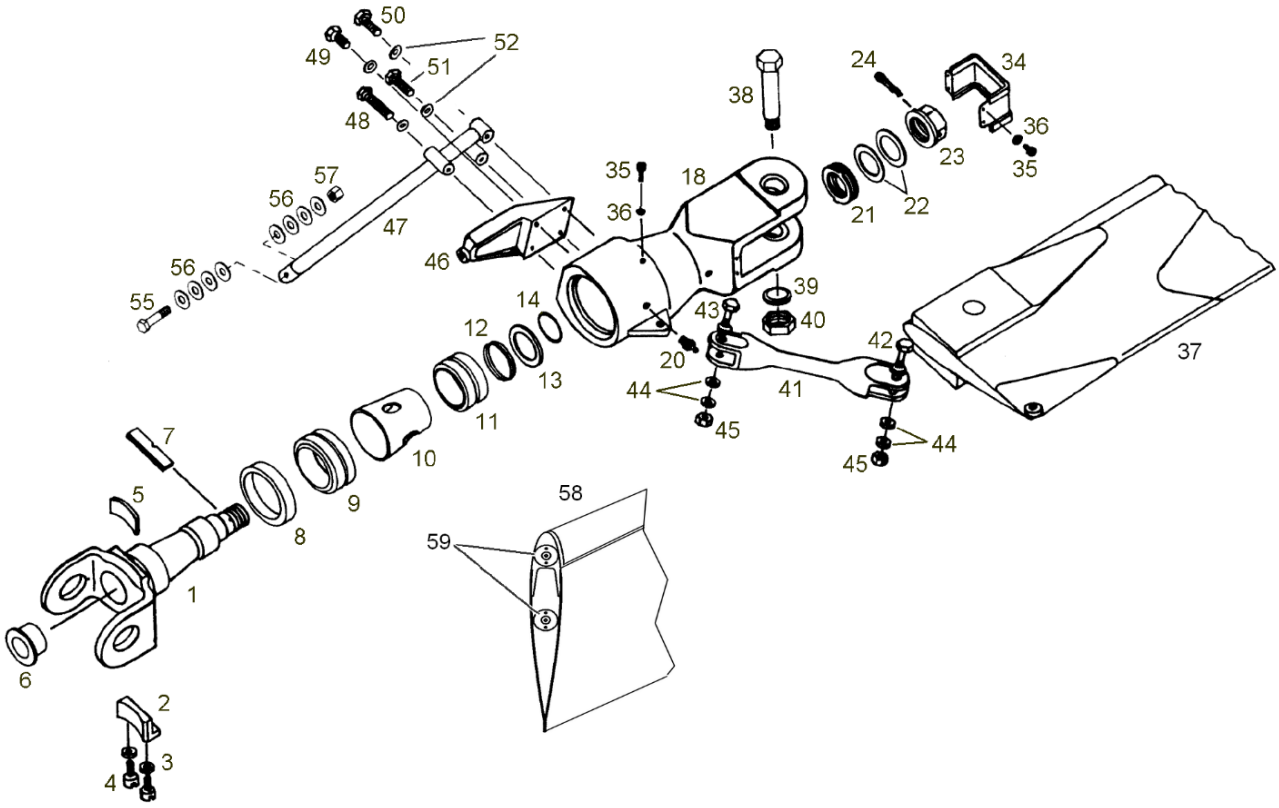

Sheet 1 of 2

FIGURE 8-3. MAIN ROTOR BLADE AND RETENTION ASSEMBLY

UNCONTROLLED COPY WHEN DOWNLOADED OR PRINTED

Visit www.enstromhelicopter.com for instructions to order an original manual and to register for email notification of updates.

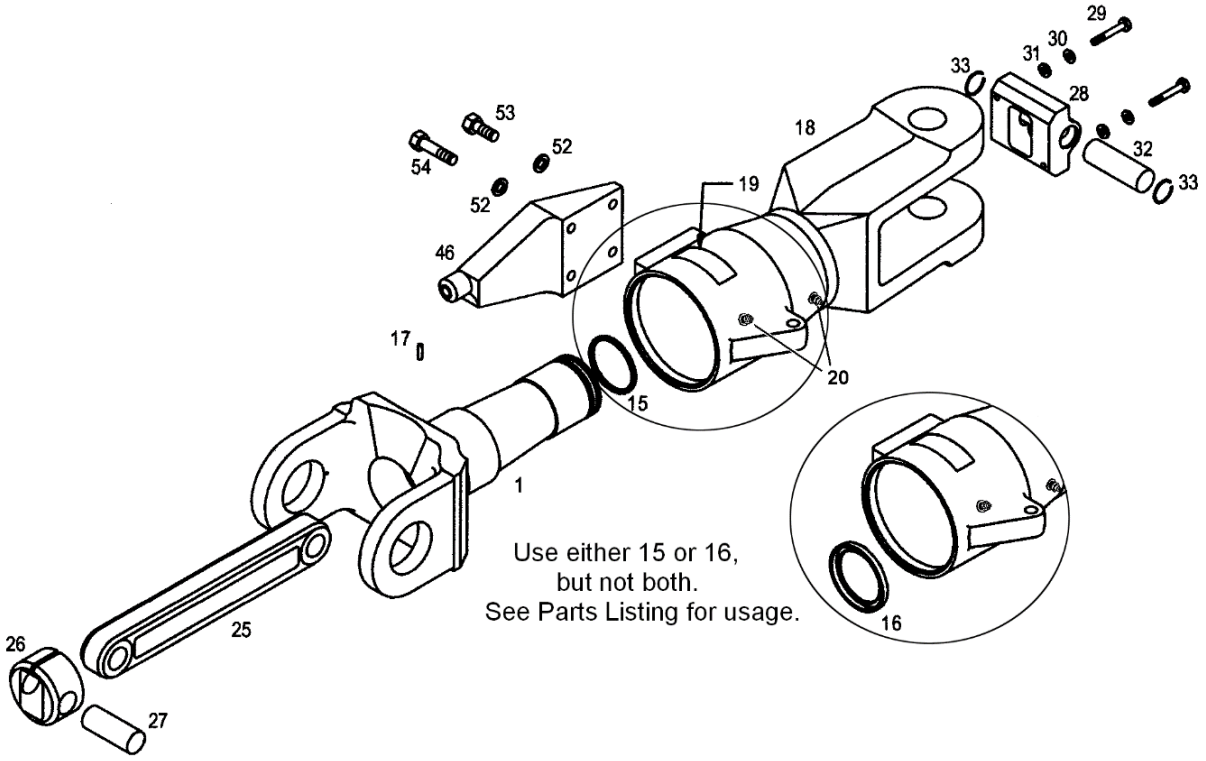

Sheet 2 of 2

FIGURE 8-3. MAIN ROTOR BLADE AND RETENTION ASSEMBLY

UNCONTROLLED COPY WHEN DOWNLOADED OR PRINTED

Visit www.enstromhelicopter.com for instructions to order an original manual and to register for email notification of updates.

FIGURE 8-3. MAIN ROTOR BLADE AND RETENTION ASSEMBLY

ITEM NUMBER	PART NUMBER	DESCRIPTION	QTY PER ASSY	EFFECTIVITY		
				TH-28	480	480B
–	28-14234-909	. Retention Assembly (Lamiflex Bearing)	3	X	X	
–	28-14381-1	. Retention Assembly (T-T Strap w/ O-Ring Seal, Superseded by 28-14381-3)	3	X	X	
–	28-14381-3	. Retention Assembly (T-T Strap w/ Lip Seal)	3	X	X	X
–	28-14234-901	. . Spindle Assembly (Used with 28-14234-909)	1	X	X	
–	28-14381-903	. . Spindle Assembly (Used with 28-14381-3)	1	X	X	X
1	28-14282-13	. . . Spindle (Used with 28-14234-901)	1	X	X	
1	28-14385-13	. . . Spindle (Used with 28-14381-1, Superseded by 28-14385-15)	1	X	X	X
1**	28-14385-15	. . . Spindle (Used with 28-14381-903)	1		X	X
2	28-14240-1	. . . Droop Stop Pad	1	X	X	X
3 ≡	NP500-8R8	. . . . Screw	2	X	X	X
4	NAS1149DN832H	. . . . Washer	2	X	X	X
5	28-14231-1	. . . Flapping Stop Pad	1	X	X	X
–	DP420	. . . . Adhesive	A/R	X	X	X
–	28-14387-13	. . Adapter (Used with 28-14381-1)	1	X	X	
6	L-18X	. . Plug (Used with 28-14234-909)	1	X	X	
7	28-14311-1	. . Nylatron Strip (Used with 28-14234-909)	1	X	X	
8≡	10065 H1L5	. . Seal: Oil	1	X	X	X
9	40NBC2052YZP	. . Bearing	1	X	X	X
10	28-14261-1	. . Spacer	1	X	X	X
11	32NBC2044YZP	. . Bearing	1	X	X	X
12	RST-200	. . Retaining Ring	1	X	X	X
13	28-14313-1	. . DU Washer (Used with 28-14234-909)	1	X	X	
14	2-029	. . O-Ring (Used with 28-14234-909)	1	X	X	
14	NAS1611-029	. . O-Ring (Alternate) (Used with 28-14234-909)	1	X	X	
15	2-133	. . O-Ring (Used with 28-14381-1)	1	X	X	
15	NAS1611-133	. . O-Ring (Alternate) (Used with 28-14381-1)	1	X	X	
16≡	CR 17240	. . Seal: Retention (Used with 28-14381-3)	1	X	X	X
17	MS16555-27	. . Pin (Used with 28-14381-1 & -3)	1	X	X	X
18	28-14279-3	. . Grip Assembly (Used with 28-14234-909)	1	X	X	
18	28-14386-3	. . Grip Assembly (Used with 28-14381-1)	1	X	X	
18	28-14386-5	. . Grip Assembly (Used with 28-14381-3)	1	X	X	X
19	28-14270-1	. . Placard	1	X	X	X

UNCONTROLLED COPY WHEN DOWNLOADED OR PRINTED

Visit www.enstromhelicopter.com for instructions to order an original manual and to register for email notification of updates.

FIGURE 8-3. MAIN ROTOR BLADE AND RETENTION ASSEMBLY

ITEM NUMBER	PART NUMBER	DESCRIPTION	QTY PER ASSY	EFFECTIVITY		
				TH-28	480	480B
20	1641-B	. . Fitting, Grease (1/4”-28 UNF-3B Thread) (Used with 28-14381-1)	2	X	X	X
20†	1650	. . Fitting, Grease (1/8” NPT Thread)	2	X	X	X
20	5045	. . Fitting, Grease (1/8” NPT Thread) (Superseded by 1650) (Obsolete)	2	X	X	X
21	28-14320-15	. . Lamiflex Bearing (Used with 28-14234-909)	1	X	X	
22	28-14293-7	. . Shim, .002” (Used with 28-14234-909)	A/R	X	X	
22	28-14293-9	. . Shim, .004” (Used with 28-14234-909)	A/R	X	X	
22	28-14293-11	. . Shim, .0075” (Used with 28-14234-909)	A/R	X	X	
22	28-14293-13	. . Shim, .010” (Used with 28-14234-909)	A/R	X	X	
23	28-14335-1	. . Nut (Used with 28-14234-909)	1	X	X	
24	AN380-4-8	. . Cotter Pin (Used with 28-14234-909)	1	X	X	
25	ECD084-1	. . Tension/Torsion Strap (Used with 28-14381-1& -3)	1	X	X	X
26	28-14381-902	. . Cylinder Assembly (Used with 28-14381-1& -3)	1	X	X	X
–	28-14383-13	. . . Cylinder	1	X	X	X
–	28-14389-13	. . . Cover	1	X	X	X
27	28-14382-21	. . Pin (Used with 28-14381-1 & -3)	2	X	X	X
28	28-14381-901	. . Lug Assembly (Used with 28-14381-1 & -3)	1	X	X	X
–	28-14389-11	. . . Cover	1	X	X	X
–	28-14384-13	. . . Lug – TT Strap Retention	1	X	X	X
29	AN3-12A	. . Bolt (Used with 28-14381-1 & -3)	2	X	X	X
30	AN960-10	. . Washer (Used with 28-14381-1 & -3)	2	X	X	X
31	AN960-10L	. . Washer (Used with 28-14381-1 & -3)	2	X	X	X
32	28-14382-19	. . Pin (Used with 28-14381-1 & -3)	1	X	X	X
33	VH-75	. . Retaining Ring (Used with 28-14381-1 & -3)	2	X	X	X
34	28-14239-1	. . Cover Assembly	1	X	X	X
–	X-142	. . . Channel	A/R	X	X	X
34	28-14239-5	. . Cover Assembly (Obsolete)	1	X	X	X
–	X-142	. . . Channel	A/R	X	X	X
35 ≡	NK-500-8R6	. . Screw	5	X	X	X
36	AN960D8	. . Washer	5	X	X	X
37	28-14100-9	. Main Rotor Blade	3	X	X	X
38	28-14007-3	. Retention Pin	3	X	X	X
39	AN960C1216	. Washer	3	X	X	X
40	AN364-1216A	. Nut	3	X	X	X

UNCONTROLLED COPY WHEN DOWNLOADED OR PRINTED

Visit www.enstromhelicopter.com for instructions to order an original manual and to register for email notification of updates.

FIGURE 8-3. MAIN ROTOR BLADE AND RETENTION ASSEMBLY

ITEM NUMBER	PART NUMBER	DESCRIPTION	QTY PER ASSY	EFFECTIVITY		
				TH-28	480	480B
41	28-14283-1	. Drag Link	3	X	X	X
42	AN176-15A	. Bolt	3	X	X	X
43	AN176-17A	. Bolt	3	X	X	X
44	AN960D616	. Washer	18	X	X	X
45	AN364-624A	. Nut	6	X	X	X
46	28-14278-1	. Pitch Arm	3	X	X	X
47	4143010-5	. Planipetal Weight (Used with 28-14234-909)	3	X	X	
48	MS20074-05-23	. Bolt (Used with 28-14234-909)	3	X	X	
49	MS24677-52	. Bolt (Used with 28-14234-909)	3	X	X	
50	MS20074-05-17	. Bolt (Used with 28-14234-909)	3	X	X	
51	MS20074-05-16	. Bolt (Used with 28-14234-909)	3	X	X	
52	AN960D516	. Washer	12	X	X	X
53	AN75-A6	. Bolt (Used with 28-14381-1 & -3)	6	X	X	X
53	MS20074-05-06	. Bolt (Alternate)	6	X	X	X
53	MS24677-49	. Bolt (Alternate)	6	X	X	X
54	AN75-A12	. Bolt (Used with 28-14381-1 & -3)	6	X	X	X
54	MS20074-05-12	. Bolt (Alternate)	6	X	X	X
54*	MS24677-52	. Bolt (Alternate)	6	X	X	X
55	AN176-15A	. Bolt (Used with 28-14234-909)	3	X	X	
56	3/8 Harper	. Washer, Flat (Used with 28-14234-909)	A/R	X	X	
57	AN365-624A	. Nut (Used with 28-14234-909)	3	X	X	
58	28-14141-913	. Leading Edge Tape/Adhesive Kit	A/R	X	X	X
58	28-14141-13-Kit	. Blade Tape Kit (Superseded by 28-14141-913)	A/R	X	X	X
59	28-14109-1	. Plug Balance Blade Rotor Main (Per Blade)	2	X	X	X
–	MS21083N3	. . Nut: Hex	2	X	X	X
–	AN960-10	. . Washer	A/R	X	X	X
–	28-14110-1	. . Washer Balance	A/R	X	X	X
–	28-14110-2	. . Washer Balance	A/R	X	X	X
–	28-14110-3	. . Washer Balance	A/R	X	X	X
–	MS24693-S287	. . Screw, Machine	2	X	X	X
–	MS246935287FLTH	. . Screw (Superseded by MS24693-S287)	2	X	X	X
–	ACF-50	. . Lubricant: Anti Corrosive	A/R	X	X	X

UNCONTROLLED COPY WHEN DOWNLOADED OR PRINTED

Visit www.enstromhelicopter.com for instructions to order an original manual and to register for email notification of updates.

*	Use only one (1) washer per bolt.
≡	See Appendix A for equivalent part information.
†	Effectivity 480B S/N 5168 and subsequent. Retrofittable to 480 S/N 5001 – 5041 and 480B S/N 5042 and subsequent.
**	Effectivity 480B S/N 5207 and subsequent. Retrofittable to 480 S/N 5001 – 5041 and 480B S/N 5042 and subsequent. 28-14385-13 is an acceptable alternate to the -15 part.

UNCONTROLLED COPY WHEN DOWNLOADED OR PRINTED

Visit www.enstromhelicopter.com for instructions to order an original manual and to register for email notification of updates.

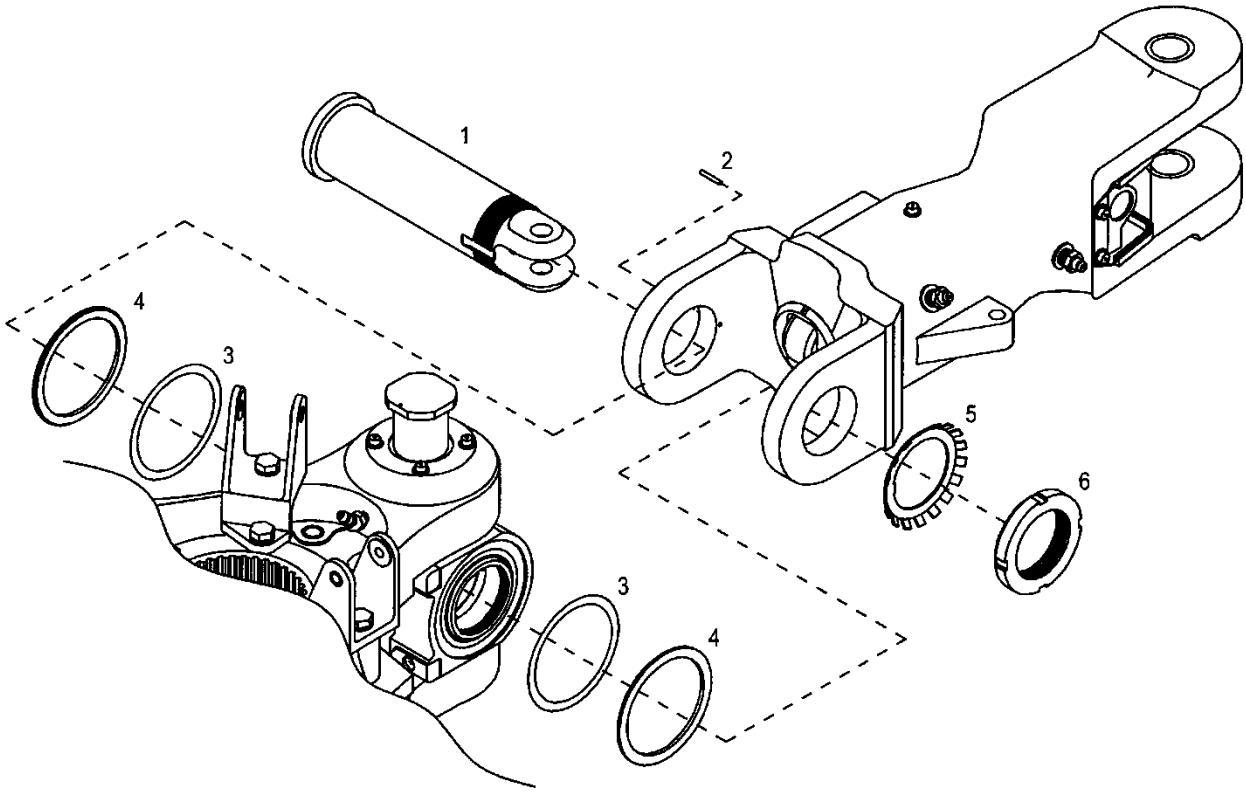

FIGURE 8-4. RETENTION ASSEMBLY/FLAPPING PIN INSTALLATION

UNCONTROLLED COPY WHEN DOWNLOADED OR PRINTED

Visit www.enstromhelicopter.com for instructions to order an original manual and to register for email notification of updates.

FIGURE 8-4. RETENTION ASSEMBLY/FLAPPING PIN INSTALLATION

ITEM NUMBER	PART NUMBER	DESCRIPTION	QTY PER ASSY	EFFECTIVITY		
				TH-28	480	480B
1	28-14233-3	. Flapping Pin	3	X	X	X
–*	L-7X	. Plug (Small) (Deleted)	3	X	X	X
–*	L-14X	. Plug (Large) (Deleted)	3	X	X	X
2	MS16562-215	. Pin	3	X	X	X
2	SS-094-0625	. Pin (Alternate)	3	X	X	X
3	28-14019-3	. Shim, .003"	A/R	X	X	X
3	28-14019-5	. Shim, .005"	A/R	X	X	X
3	28-14019-6	. Shim, .006"	A/R	X	X	X
3	28-14019-7	. Shim, .007"	A/R	X	X	X
3	28-14019-8	. Shim, .008"	A/R	X	X	X
3	28-14019-10	. Shim, .010"	A/R	X	X	X
4	28-14236-1	. Thrust Washer	6	X	X	X
5	W-09	. Lock Washer	3	X	X	X
6	28-14227-11	. Lock Nut	3	X	X	X

* Effectivity 480B S/N 5147. Plugs are no longer necessary.

UNCONTROLLED COPY WHEN DOWNLOADED OR PRINTED

Visit www.enstromhelicopter.com for instructions to order an original manual and to register for email notification of updates.

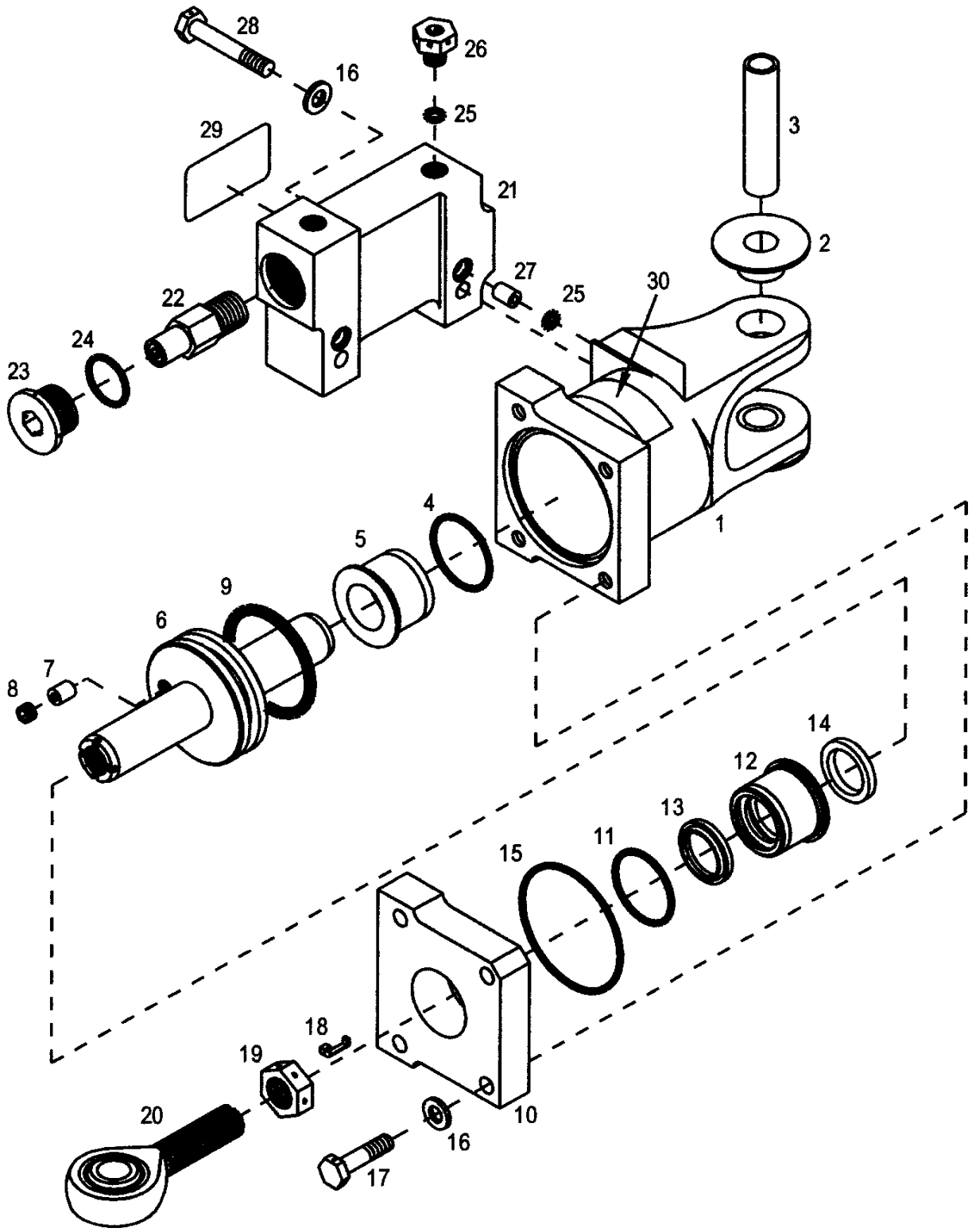

FIGURE 8-5. HYDRAULIC DAMPER ASSEMBLY

UNCONTROLLED COPY WHEN DOWNLOADED OR PRINTED

Visit www.enstromhelicopter.com for instructions to order an original manual and to register for email notification of updates.

FIGURE 8-5. HYDRAULIC DAMPER ASSEMBLY

ITEM NUMBER	PART NUMBER	DESCRIPTION	QTY PER ASSY	EFFECTIVITY		
				TH-28	480	480B
–*	28-14375-107	. Damper Assembly	3	X	X	
–**	28-14375-103	. Damper Assembly	3		X	X
–	28-14375-906	. . Damper Housing Assembly (Used with 28-14375-107)	1	X	X	
–	28-14375-908	. . Damper Housing Assembly (Used with 28-14375-103)	1		X	X
1	28-14357-3	. . . Damper Housing (Used with 28-14375-107)	1	X	X	
1	28-14357-5	. . . Damper Housing (Used with 28-14375-103)	1		X	X
2	28-14276-1	. . . Flanged Bushing (Used with 28-14375-107)	2	X	X	
2	28-14359-15	. . . Flanged Bushing (Used with 28-14375-103)	2		X	X
3	28-14277-1	. . . Damper Bushing (Used with 28-14375-107)	1	X	X	
3	28-14359-17	. . . Spacer (Used with 28-14375-103)	1		X	X
4	2-025	. . . O-Ring (E515-80 Material)	1	X	X	X
4	NAS1611-025	. . . O-Ring (Alternate)	1	X	X	X
5	28-14358-4	. . . Sleeve Assembly (See Item 12 for breakdown)	1	X	X	X
6	28-14370-17	. . Piston	1	X	X	X
7	82043-22420	. . Threaded Orifice	1	X	X	X
8	51086	. . Set Screw	1	X	X	X
8	28-14390-11	. . Set Screw (Alternate)	1	X	X	X
9	PGZF0A0180	. . Glyd Ring Set	1		X	X
–	28-14375-907	. . Damper Cover Assembly	1	X	X	X
10	28-14265-3	. . . Damper End Cap	1	X	X	X
11	2-025	. . . O-Ring (E515-80 Material)	1	X	X	X
11	NAS1611-025	. . . O-Ring (Alternate)	1	X	X	X
12	28-14358-4	. . . Sleeve Assembly	1	X	X	X
–	28-14356-5	. . . . Sleeve	1	X	X	X
13	959-5	. . . . Wiper Ring	1	X	X	X
14	12500750-125B	. . . . Seal	1	X	X	X
15	2-137	. . O-Ring (E515-80 Material)	1	X	X	X

UNCONTROLLED COPY WHEN DOWNLOADED OR PRINTED

Visit www.enstromhelicopter.com for instructions to order an original manual and to register for email notification of updates.

FIGURE 8-5. HYDRAULIC DAMPER ASSEMBLY

ITEM NUMBER	PART NUMBER	DESCRIPTION	QTY PER ASSY	EFFECTIVITY		
				TH-28	480	480B
15	NAS1611-137	. . O-Ring (Alternate)	1	X	X	X
16	NAS1149F0463P	. . Washer	6	X	X	X
16	AN960-416	. . Washer (Superseded by NAS1149F0463P)	6	X	X	X
17	AN4H10A	. . Bolt	4	X	X	X
18	NAS559-3	. . Lock, Type A	1	X	X	X
19	NAS509-8	. . Nut	1	X	X	X
20	ECD091-1	. . Rod End Bearing	1	X	X	X
21	28-14366-1	. . Reservoir	1	X	X	X
22	28-14367-7	. . Valve Assembly	2	X	X	X
23	28-14368-2	. . Plug	2	X	X	X
24	NAS1612-10	. . O-Ring (Preferred)	2	X	X	X
24	3-910 E515-80	. . O-Ring (Alternate)	2	X	X	X
25≡	NAS1612-2	. . O-Ring (Preferred)	4	X	X	X
25 ≡	NAS1612-2A	. . O-Ring (Alternate)	4	X	X	X
25	3-902 E515-80	. . O-Ring (Alternate)	4	X	X	X
26	AN814-2DL	. . Plug	2	X	X	X
27	28-14369-1	. . Sleeve	2	X	X	X
28	AN4H15A	. . Bolt	2	X	X	X
29†	28-14374-15	. . Placard	1	X	X	X
29	28-14374-13	. . Placard (Superseded by 28-14374-15)	1	X	X	X
30	28-13145-1	. . Placard	1	X	X	X

* Used with Center Hub Assembly, P/N 28-14219-3; 480 S/N 5001 through 5041 only.

** Used with Center Hub Assembly, P/N 28-14219-5 and -7.

≡ See Appendix A for equivalent part information.

† Effectivity 480B S/N 5114 and subsequent. Retrofittable to 480 S/N 5001 to 5041 and 480B S/N 5042 and subsequent.

UNCONTROLLED COPY WHEN DOWNLOADED OR PRINTED

Visit www.enstromhelicopter.com for instructions to order an original manual and to register for email notification of updates.

INTENTIONALLY LEFT BLANK

UNCONTROLLED COPY WHEN DOWNLOADED OR PRINTED

Visit www.enstromhelicopter.com for instructions to order an original manual and to register for email notification of updates.

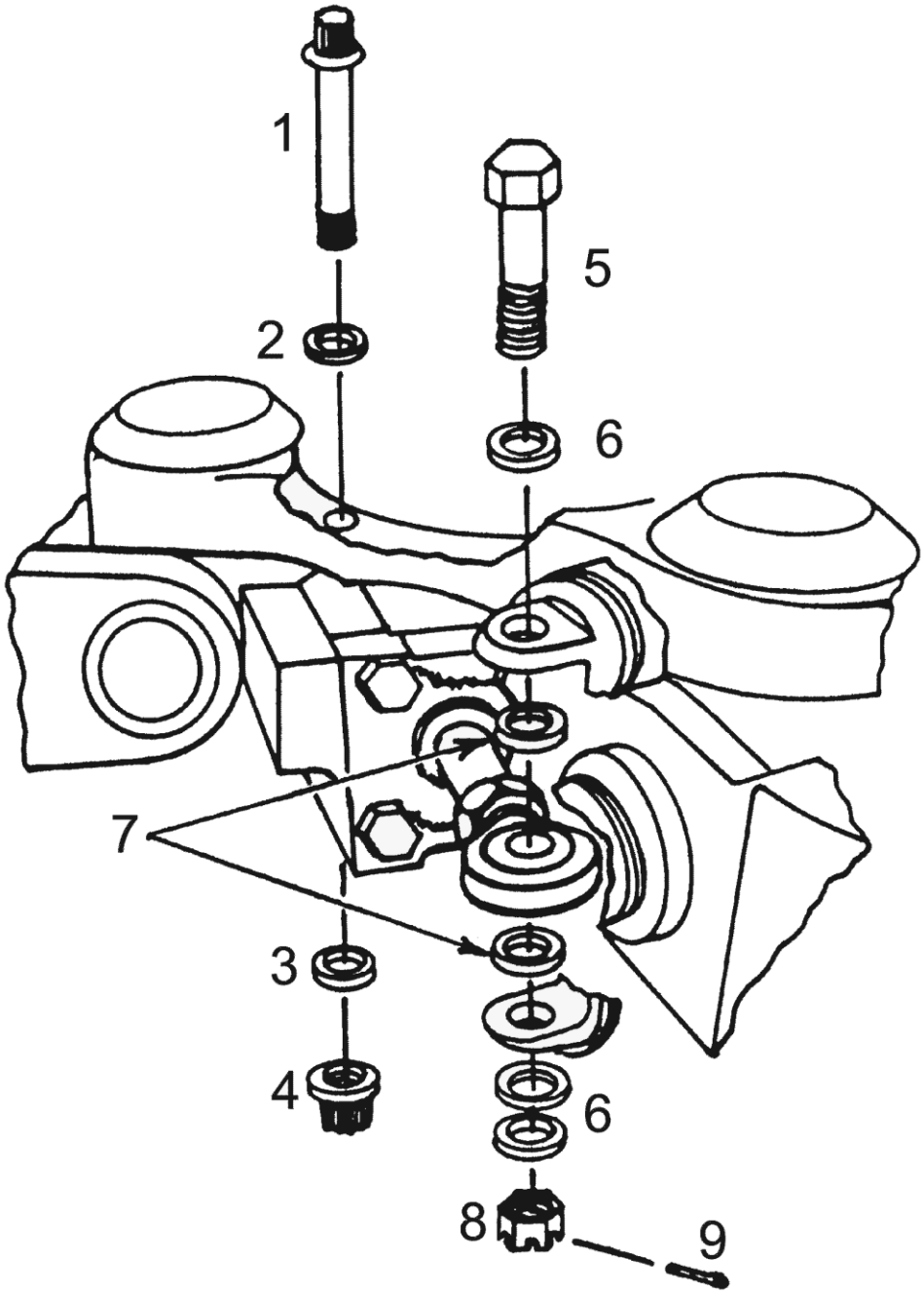

Hydraulic Damper Assembly

FIGURE 8-6. MAIN ROTOR DAMPER INSTALLATION

UNCONTROLLED COPY WHEN DOWNLOADED OR PRINTED

Visit www.enstromhelicopter.com for instructions to order an original manual and to register for email notification of updates.

FIGURE 8-6. MAIN ROTOR DAMPER INSTALLATION

ITEM NUMBER	PART NUMBER	DESCRIPTION	QTY PER ASSY	EFFECTIVITY		
				TH-28	480	480B
1	LWB-22-6-58	. Bolt	3	X	X	X
1	HPF1260-6-58	. Bolt (Alternate)	3	X	X	X
1	NAS626-58	. Bolt (Alternate)	3	X	X	X
2	WC-22-6	. Washer	3	X	X	X
2	MS21299C6	. Washer (Alternate)	3	X	X	X
3	WP-22-6	. Washer	3	X	X	X
3	AP22-6	. Washer (Alternate)	3	X	X	X
4 ≡	FN22M-624	. Nut	3	X	X	X
5	AN178-21	. Bolt	3	X	X	X
6	AN960-816	. Washer	9	X	X	X
7	28-14259-1	. Spacer	6	X	X	X
8	F12NE-4753-080	. Nut	3	X	X	X
9	AN381-3-16	. Cotter Pin	3	X	X	X

≡ See Appendix A for equivalent part information.

UNCONTROLLED COPY WHEN DOWNLOADED OR PRINTED

Visit www.enstromhelicopter.com for instructions to order an original manual and to register for email notification of updates.

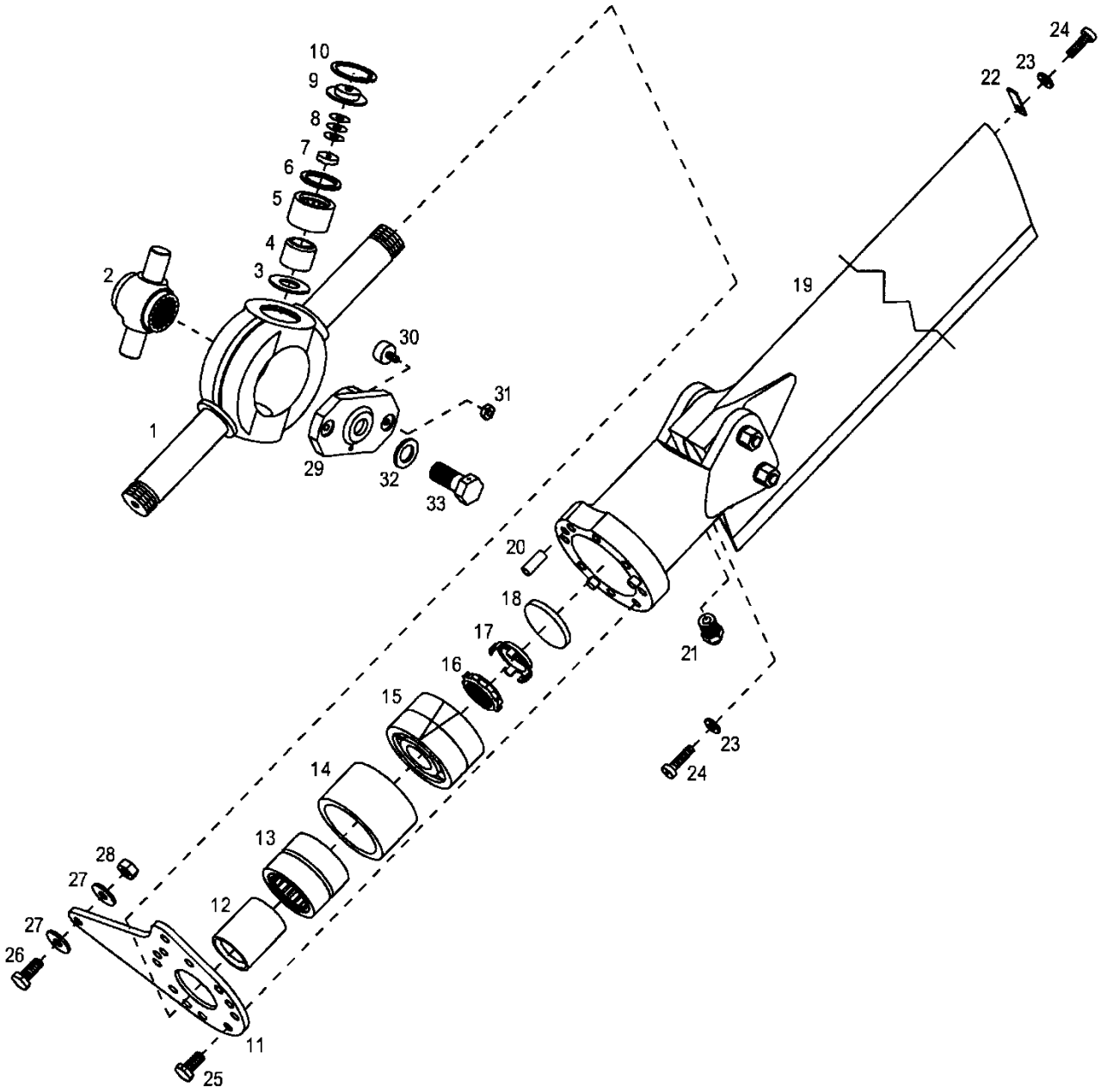

FIGURE 8-7. TAIL ROTOR ASSEMBLY

UNCONTROLLED COPY WHEN DOWNLOADED OR PRINTED

Visit www.enstromhelicopter.com for instructions to order an original manual and to register for email notification of updates.

FIGURE 8-7. TAIL ROTOR ASSEMBLY

ITEM NUMBER	PART NUMBER	DESCRIPTION	QTY PER ASSY	EFFECTIVITY		
				TH-28	480	480B
–	28-150079-7	. Tail Rotor Assembly	1	X	X	X
–	28-150079-901	. . Tail Rotor Spindle Assembly	1	X	X	X
1	28-150074-13	. . . Spindle	1	X	X	X
1	28-150074-11	. . . Spindle (Alternate)	1	X	X	X
2	28-150067-15	. . . Hub	1	X	X	X
3	28-150076-17	. . . Washer	2	X	X	X
4	28-150076-15	. . . Journal	2	X	X	X
5 ≡	B-1210	. . . Bearing	2	X	X	X
6	28-150076-19	. . . Seal	2	X	X	X
7	28-150076-13	. . . Thrust Bumper	2	X	X	X
8	28-150078-10	. . . Shim, .010"	A/R	X	X	X
8	28-150078-12	. . . Shim, .002"	A/R	X	X	X
8	28-150078-13	. . . Shim, .003"	A/R	X	X	X
8	28-150078-15	. . . Shim, .005"	A/R	X	X	X
9	28-150076-1	. . . End Plate	2	X	X	X
10	N5002-100	. . . Retaining Ring	2	X	X	X
11	28-150060-11	. . . Plate	2	X	X	X
12	28-150063-13	. . . Bearing Sleeve	2	X	X	X
12	28-150063-11	. . . Bearing Sleeve (Alternate)	2	X	X	X
13	ECD001-11	. . . Bearing	2	X	X	X
13	ECD001-13	. . . Bearing (Alternate)	2	X	X	X
13	ECD001-15	. . . Bearing (Alternate)	2	X	X	X
14Δ	28-150055-15	. . . Bearing Retainer	2	X	X	X
14	28-150055-13	. . . Bearing Retainer (Superseded by 28-150055-15)	2	X	X	X
14	28-150055-1	. . . Bearing Retainer (Alternate)	2	X	X	X
15	ECD002-13	. . . Bearing Assembly (Set)	2	X	X	X
16 ≡	SL61N5P	. . . Lock Nut	2	X	X	X
16	SL61N5F	. . . Lock Nut (Alternate)	2	X	X	X
17 ≡	SL61W5P	. . . Lock Washer	2	X	X	X
18●	28-15033-5	. . Bumper Assembly	2	X	X	X
18**	28-15033-1	. . Bumper Assembly (Superseded by 28-15033-5)	2	X	X	X
18	28-15033-11	. . Bumper (Obsolete)	2	X	X	X
18	28-15033-15	. . Bumper (Obsolete)	2	X	X	X
18	28-15033-17	. . Bumper (Obsolete)	2	X	X	X
19	28-150001-9	. . Tail Rotor Blade and Grip Assembly	2	X	X	X
20	28-150044-5	. . . Dowel Pin	3	X	X	X

UNCONTROLLED COPY WHEN DOWNLOADED OR PRINTED

Visit www.enstromhelicopter.com for instructions to order an original manual and to register for email notification of updates.

FIGURE 8-7. TAIL ROTOR ASSEMBLY

ITEM NUMBER	PART NUMBER	DESCRIPTION	QTY PER ASSY	EFFECTIVITY		
				TH-28	480	480B
21	1650	. . Lube Fitting	2	X	X	X
22	28-17308-1	. . Strike Tab	2	X	X	X
23	AN960-10	. . Washer	A/R	X	X	X
23	AN960-10L	. . Washer	A/R	X	X	X
23	AN960D10	. . Washer	A/R	X	X	X
23	AN960D10L	. . Washer	A/R	X	X	X
24*	AN520-10-“X”	. . Screw	4	X	X	X
25	AN4H-4A	. . Bolt	16	X	X	X
26	AN4-5A	. . Bolt	2	X	X	X
27	1/4 Harper	. . Washer, Flat	4	X	X	X
28	AN364-428A	. . Nut	2	X	X	X
29	28-15030-1	. Teeter Stop Assembly	1	X	X	X
30	16-1	. . Bumper	2	X	X	X
31	AN364-632A	. . Nut	2	X	X	X
32	AN960-716	. Washer	1	X	X	X
33	AN7H-7A	. Bolt	1	X	X	X

* Length as required for balancing tail rotor assembly.

** Effectivity 480B S/N 5143 through S/N 5157.

≡ See Appendix A for equivalent part information.

● Supersedes all other 28-15033 bumpers. Effectivity S/N 5158 and subsequent. 28-150080-11 shim (orange) goes towards SL1W5P lock washer.

▌ Δ Effectivity 480B S/N 5080 and subsequent; Eligibility 480/B S/N 5001 and subsequent.

UNCONTROLLED COPY WHEN DOWNLOADED OR PRINTED

Visit www.enstromhelicopter.com for instructions to order an original manual and to register for email notification of updates.

SECTION 9

FLIGHT CONTROLS

UNCONTROLLED COPY WHEN DOWNLOADED OR PRINTED

Visit www.enstromhelicopter.com for instructions to order an original manual and to register for email notification of updates.

INTENTIONALLY LEFT BLANK

UNCONTROLLED COPY WHEN DOWNLOADED OR PRINTED

Visit www.enstromhelicopter.com for instructions to order an original manual and to register for email notification of updates.

SECTION 9 – TABLE OF CONTENTS

	Cover	9-1
	Table of Contents	9-1.2
9-1	Cyclic Stick and Torque Tube Installation	9-2
9-2	Cyclic Control Tube and Bellcrank Installation	9-6
9-3	Cyclic Trim Assembly	9-12
9-4	Collective Stick and Torque Tube Installation	9-16
9-5	Collective Control Tube and Bellcrank Installation	9-18
9-6	Collective Stick – Pilot (SN 5135 and Prior)	9-20
9-7	Collective Stick – Copilot (SN 5135 and Prior)	9-22
9-7.1	Collective Stick – Pilot (SN 5136 and Subs)	9-23.1
9-7.2	Collective Stick – Copilot (SN 5136 and Subs)	9-23.5
9-8	Collective Trim Assembly	9-24
9-9	Collective Friction Assembly	9-28
9-10	Lower Swashplate Assembly Installation	9-30
9-11	Lower Swashplate Assembly	9-32
9-12	Upper Swashplate Assembly and Controls	9-34
9-13	Main Rotor Pitch Change Controls	9-38
9-14	Tail Rotor Control System (Dual Control)	9-40
9-15	Tail Rotor Rotating Controls	9-48

UNCONTROLLED COPY WHEN DOWNLOADED OR PRINTED

Visit www.enstromhelicopter.com for instructions to order an original manual and to register for email notification of updates.

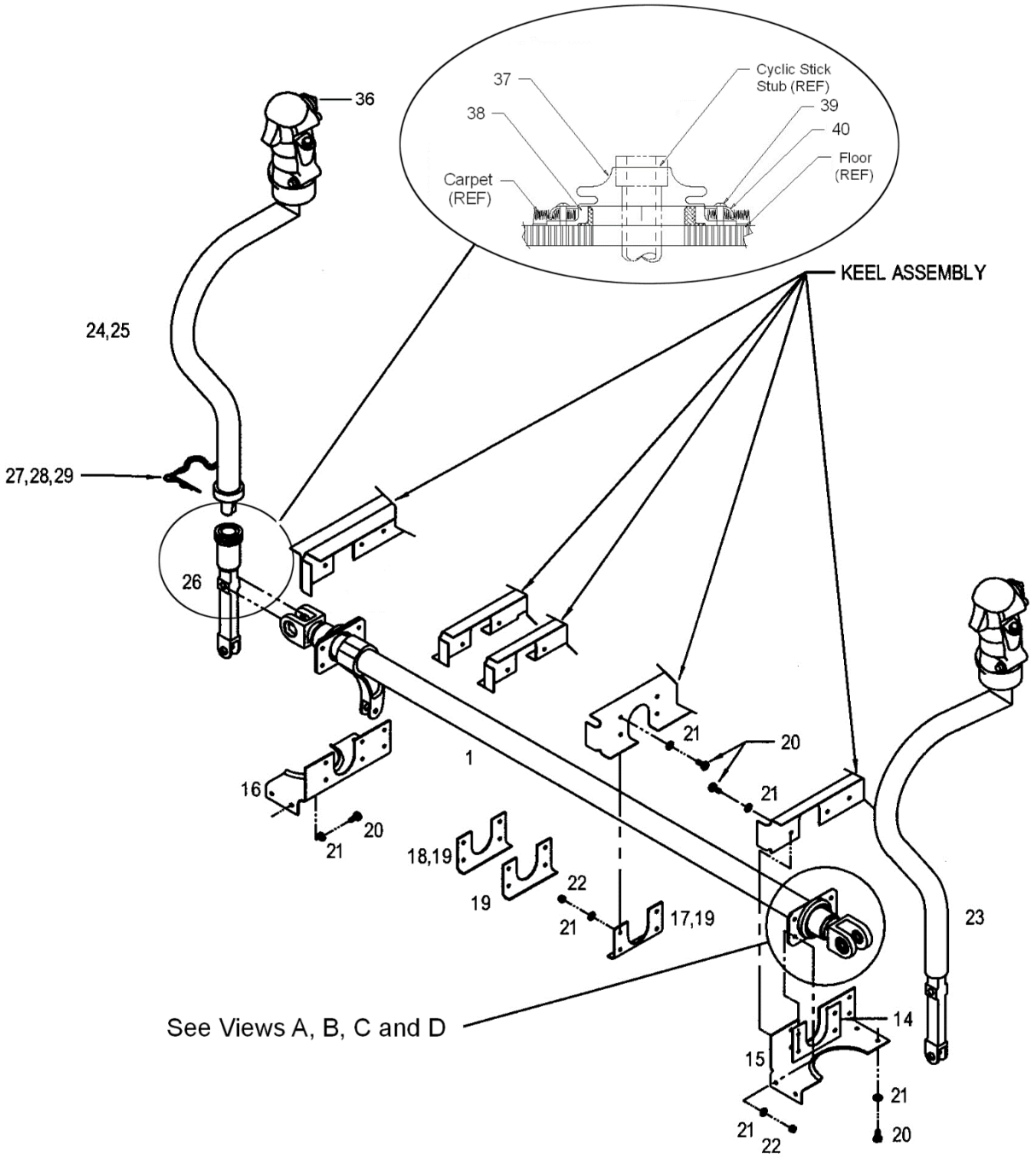

Sheet 1 of 2

FIGURE 9-1. CYCLIC STICK AND TORQUE TUBE INSTALLATION

UNCONTROLLED COPY WHEN DOWNLOADED OR PRINTED

Visit www.enstromhelicopter.com for instructions to order an original manual and to register for email notification of updates.

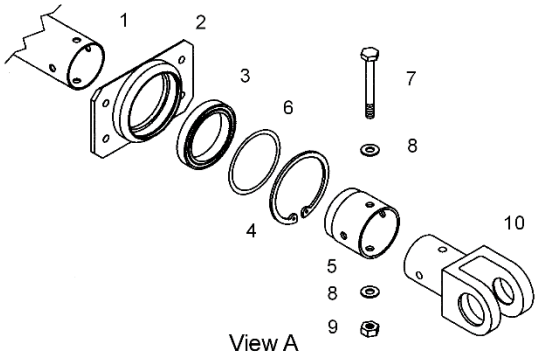

View A
Torque Tube to Clevis Installation

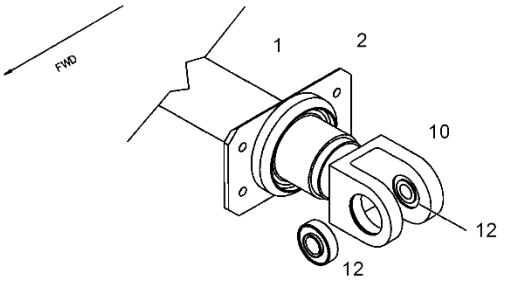

View B
Clevis Bearing Installation
480B SN 5059 and Subsequent

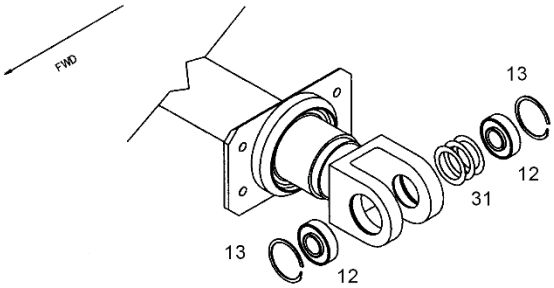

View C
Clevis Bearing Installation
480B SN 5058 and Prior

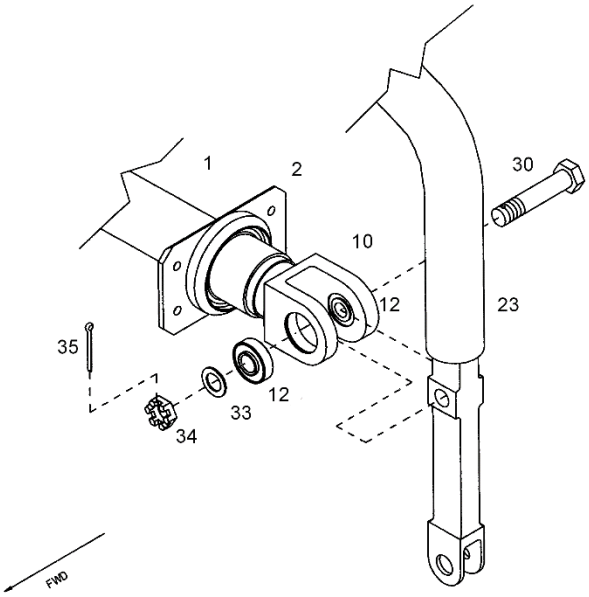

View D
Cyclic Stick Installation

Sheet 2 of 2

FIGURE 9-1. CYCLIC STICK AND TORQUE TUBE INSTALLATION

UNCONTROLLED COPY WHEN DOWNLOADED OR PRINTED

Visit www.enstromhelicopter.com for instructions to order an original manual and to register for email notification of updates.

FIGURE 9-1. CYCLIC STICK AND TORQUE TUBE INSTALLATION

ITEM NUMBER	PART NUMBER	DESCRIPTION	QTY PER ASSY	EFFECTIVITY		
				TH-28	480	480B
1◦	4166009-9	. Cyclic Torque Tube Assembly	1		X	X
–	4166010-7	. . Bearing Retainer Assembly	2		X	X
2	4166015-17	. . . Retainer	1		X	X
3	MS21428-42	. . . Bearing	1		X	X
4	4166015-21	. . . Retaining Ring	1		X	X
5	4166015-23	. . . Sleeve	1		X	X
7	CR3523-6-5	. . Rivet	8		X	X
10	4166014-5	. . Fitting Assembly	2		X	X
12	MS14104-6	. . . Bearing	1		X	X
12	MS14101-6	. . . Bearing (Aft Side of Torque Tube)	1		X	X
1*	4166009-7	. Cyclic Torque Tube Assembly	1	X	X	X
1◦◦	4166009-101	. Cyclic Torque Tube Assembly (Alternate)	1		X	X
–	4166010-7	. . Bearing Retainer Assembly	2	X	X	X
2	4166015-17	. . . Retainer	1	X	X	X
3	MB542DD	. . . Bearing	1	X	X	X
3	MS21428-42	. . . Bearing (Used with 4166009-101)	1		X	X
4	4166015-21	. . . Retaining Ring	1	X	X	X
5	4166015-23	. . . Sleeve	1	X	X	X
7	AN3-16A	. . Bolt	4	X	X	X
7	CR3523-6-5	. . Rivet (Used with 4166009-101)	8		X	X
8	AN960-10L	. . Washer	8	X	X	X
9	AN364-1032A	. . Nut	4	X	X	X
10	4166014-3	. . Fitting Assembly	2	X	X	X
11	4166053-15	. . . Shim, .005"	A/R	X	X	X
12	MS27641-6	. . . Bearing	2	X	X	X
13	VH-87-S02	. . . Retaining Ring	2	X	X	X
1**	4166009-5	. Cyclic Torque Tube Assembly	1	X	X	X
–	4166010-3	. . Bearing Retainer Assembly	2	X	X	X
2	4166015-11	. . . Retainer	1	X	X	X
3	MB542DD	. . . Bearing	1	X	X	X
4	4166015-21	. . . Retaining Ring	1	X	X	X
5	4166015-15	. . . Sleeve	1	X	X	X
7	CR3523-6-5	. . Rivet	8	X	X	X
10	4166014-3	. . Fitting Assembly	2	X	X	X
11	4166053-15	. . . Shim, .005"	A/R	X	X	X

UNCONTROLLED COPY WHEN DOWNLOADED OR PRINTED

Visit www.enstromhelicopter.com for instructions to order an original manual and to register for email notification of updates.

FIGURE 9-1. CYCLIC STICK AND TORQUE TUBE INSTALLATION

ITEM NUMBER	PART NUMBER	DESCRIPTION	QTY PER ASSY	EFFECTIVITY		
				TH-28	480	480B
12	MS27641-6	. . . Bearing	2	X	X	X
13	VH-87-S02	. . . Retaining Ring	2	X	X	X
1†	4166009-3	. Cyclic Torque Tube Assembly	1	X	X	
–	4166010-1	. . Bearing Retainer Assembly	2	X	X	
2	4166015-11	. . . Retainer	1	X	X	
3	MB542DD	. . . Bearing	1	X	X	
4	VH-175-S02	. . . Retaining Ring	1	X	X	
5	4166015-13	. . . Sleeve	1	X	X	
6	4166015-19	. . . Shim	A/R	X	X	
7	CR3523-6-05	. . Rivet	8	X	X	
10	4166014-1	. . Fitting Assembly	2	X	X	
11	4166053-15	. . . Shim, .005"	A/R	X	X	
12	MS27641-6	. . . Bearing	2	X	X	
13	VH-87-S02	. . . Retaining Ring	2	X	X	
14	4166051-15	. Shim, .015"	A/R	X	X	X
14	4166051-20	. Shim, .020"	A/R	X	X	X
14	4166051-25	. Shim, .025"	A/R	X	X	X
14	4166051-30	. Shim, .030"	A/R	X	X	X
15	4118824-17	. Bracket (Required with 4166009-7)	1	X	X	X
15	4118824-11	. Bracket (Alternate)	1	X	X	X
16	4118824-18	. Bracket (Required with 4166009-7)	1	X	X	X
16	4118824-12	. Bracket (Alternate)	1	X	X	X
17	4118805-11	. Bracket (Obsolete)	1	X		
18	4118805-12	. Bracket (Obsolete)	1	X		
19	4118805-13	. Gusset	3		X	X
20	NAS6203-2	. Bolt	30	X	X	X
21	AN960D10	. Washer	30	X	X	X
22	MS21042-3	. Nut	30	X	X	X
23	4199008-8	. Cyclic Stick Assembly, Long	1		X	
23	4199045-103	. Cyclic Stick Assembly, Pilot Short	1		X	
23‡●	4199045-109	. Cyclic Stick Assembly, Pilot Short	1		X	X
23	4199045-131	. Cyclic Stick Assembly, Pilot Long	1		X	X
24	4199008-7	. Cyclic Stick Assembly, Pilot/Copilot	2	X		
25	4199045-105	. Cyclic Stick Assembly, Copilot Short	1		X	
25‡●	4199045-111	. Cyclic Stick Assembly, Copilot Short	1		X	X
25	4199045-133	. Cyclic Stick Assembly, Copilot Long	1		X	X

UNCONTROLLED COPY WHEN DOWNLOADED OR PRINTED

Visit www.enstromhelicopter.com for instructions to order an original manual and to register for email notification of updates.

FIGURE 9-1. CYCLIC STICK AND TORQUE TUBE INSTALLATION

ITEM NUMBER	PART NUMBER	DESCRIPTION	QTY PER ASSY	EFFECTIVITY		
				TH-28	480	480B
26	4166022-905	. . Copilot Cyclic Stick Socket Assembly	1		X	X
27	AN416-1	. . Safety Pin	1		X	X
27	502	. . Safety Pin (Alternate)	1		X	X
28	52305-A06-6	. . Lanyard	1		X	X
29	CR3213-5-03	. . Rivet	1		X	X
30	NAS6206-24D	. Bolt	2	X	X	X
30	NAS6206-23D	. Bolt (Superseded by NAS6206-24D)	2	X	X	X
31	28-16524-3	. Shim, .020"	A/R	X	X	X
31	28-16524-4	. Shim, .015"	A/R	X	X	X
31	28-16524-5	. Shim, .005"	A/R	X	X	X
31	28-16524-6	. Shim, .003"	A/R	X	X	X
31	28-16524-7	. Shim, .002"	A/R	X	X	X
31	28-16524-8	. Shim, .001"	A/R	X	X	X
32	AN960D616	. Washer	2	X	X	X
33	AN960D616L	. Washer	4	X	X	X
34	MS17826-6	. Nut	2	X	X	X
35	AN381-3-12	. Cotter Pin	2	X	X	X
36	G2-0032	. Otto Grip (Used with 4199008 and 4199045 Cyclic Sticks)	1	X	X	X
–	P1-112	. . Snap Action Switch	3	X	X	X
–	T4-0198	. . Trim Control	1	X	X	X
–	U2-025	. . Cyclic Grip Trigger	1	X	X	X
37 ≡	4167521-21	. Boot: Cyclic Turbine	2	X	X	X
37 ≡	ZFD-1094-0-7-32	. Boot: Cyclic Turbine (Superseded by 4167521-21)	2	X	X	X
38	4167511-5	. Stop Ring Assembly	2	X	X	X
39	AN526-832R8	. Screw	4	X	X	X
40	4167521-19	. Cover Boot, Cyclic Stub	2	X	X	X

◦ Production effectivity - 480/480B, S/N 5059 and subsequent.

◦◦ Production effectivity - 480/480B, S/N 5053 thru 5058.

* Production effectivity - 480B, S/N 5045 thru 5052. Replacement assembly for all prior serial number aircraft. Requires Bracket, P/N 4118824-17 & 4118824-18.

** Production effectivity - 480/480B, S/N 5012 thru 5044.

† Production effectivity - TH-28, S/N 3004 thru 3006; 480, S/N 5001 thru 5011.

‡ 480: Requires installation of Bellcrank Assembly, P/N 4106624-1 or -5 and 4166024-3 or -7 (Cyclic Vibration Absorbers).

UNCONTROLLED COPY WHEN DOWNLOADED OR PRINTED

Visit www.enstromhelicopter.com for instructions to order an original manual and to register for email notification of updates.

- 4199045-109 (pilot) and 4199045-111 (copilot) short stick assemblies are acceptable alternates for the 4199008-7 cyclic control installation.

≡ See Appendix A for equivalent part information.

UNCONTROLLED COPY WHEN DOWNLOADED OR PRINTED

Visit www.enstromhelicopter.com for instructions to order an original manual and to register for email notification of updates.

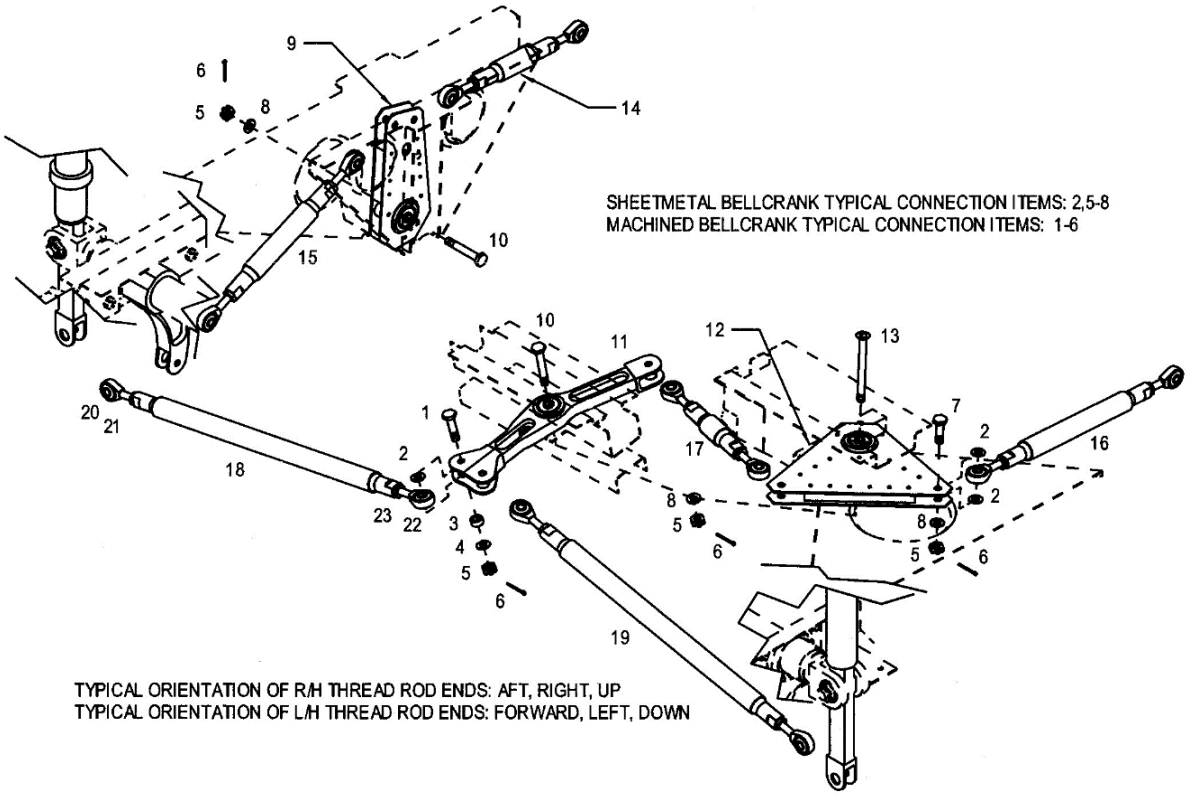

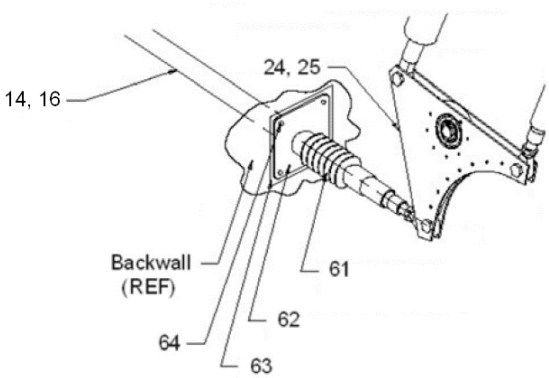

Detail C

Sheet 1 of 3

FIGURE 9-2. CYCLIC CONTROL TUBE AND BELLCRANK INSTALLATION

UNCONTROLLED COPY WHEN DOWNLOADED OR PRINTED

Visit www.enstromhelicopter.com for instructions to order an original manual and to register for email notification of updates.

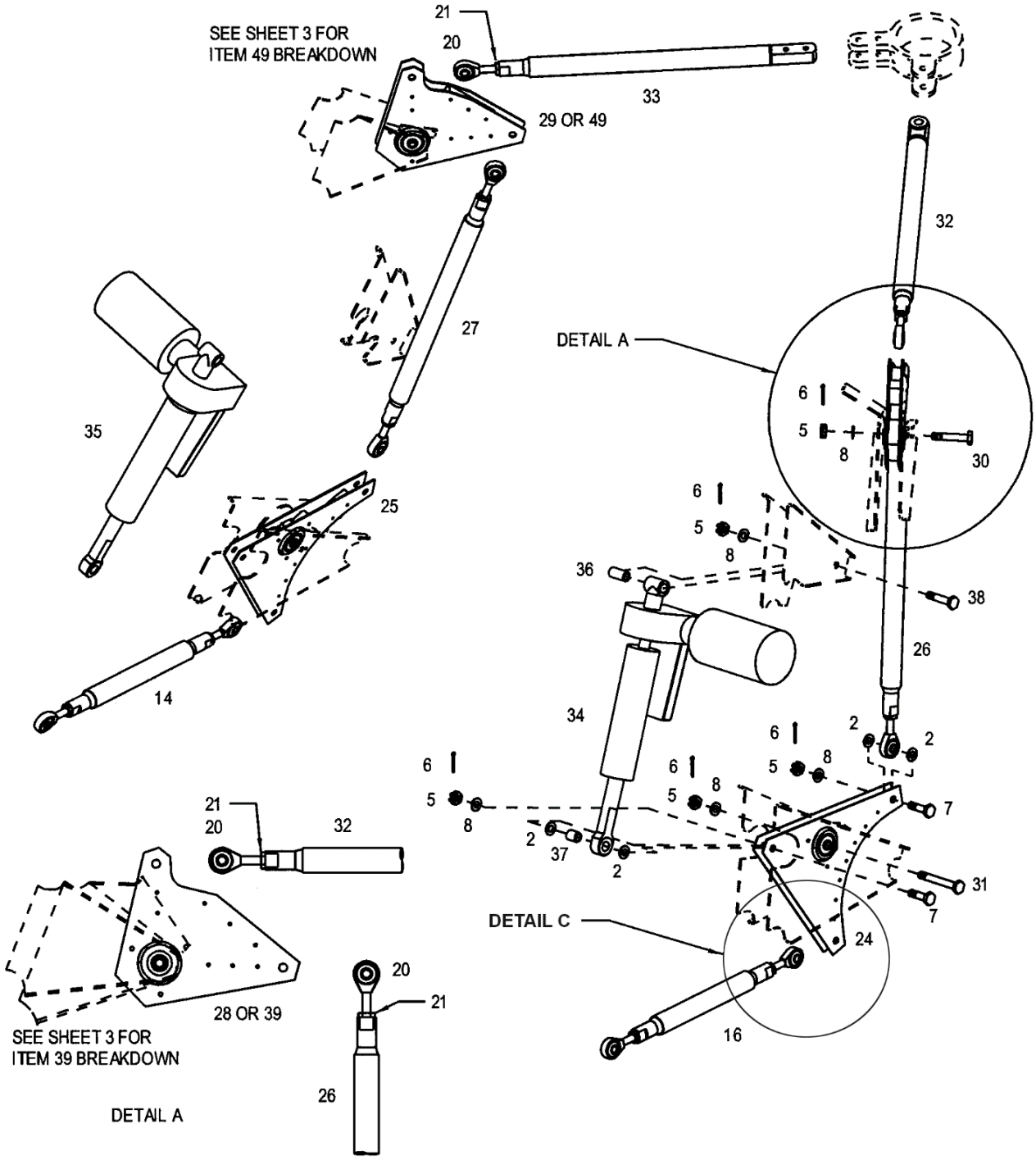

Sheet 2 of 3

FIGURE 9-2. CYCLIC CONTROL TUBE AND BELLCRANK INSTALLATION

UNCONTROLLED COPY WHEN DOWNLOADED OR PRINTED

Visit www.enstromhelicopter.com for instructions to order an original manual and to register for email notification of updates.

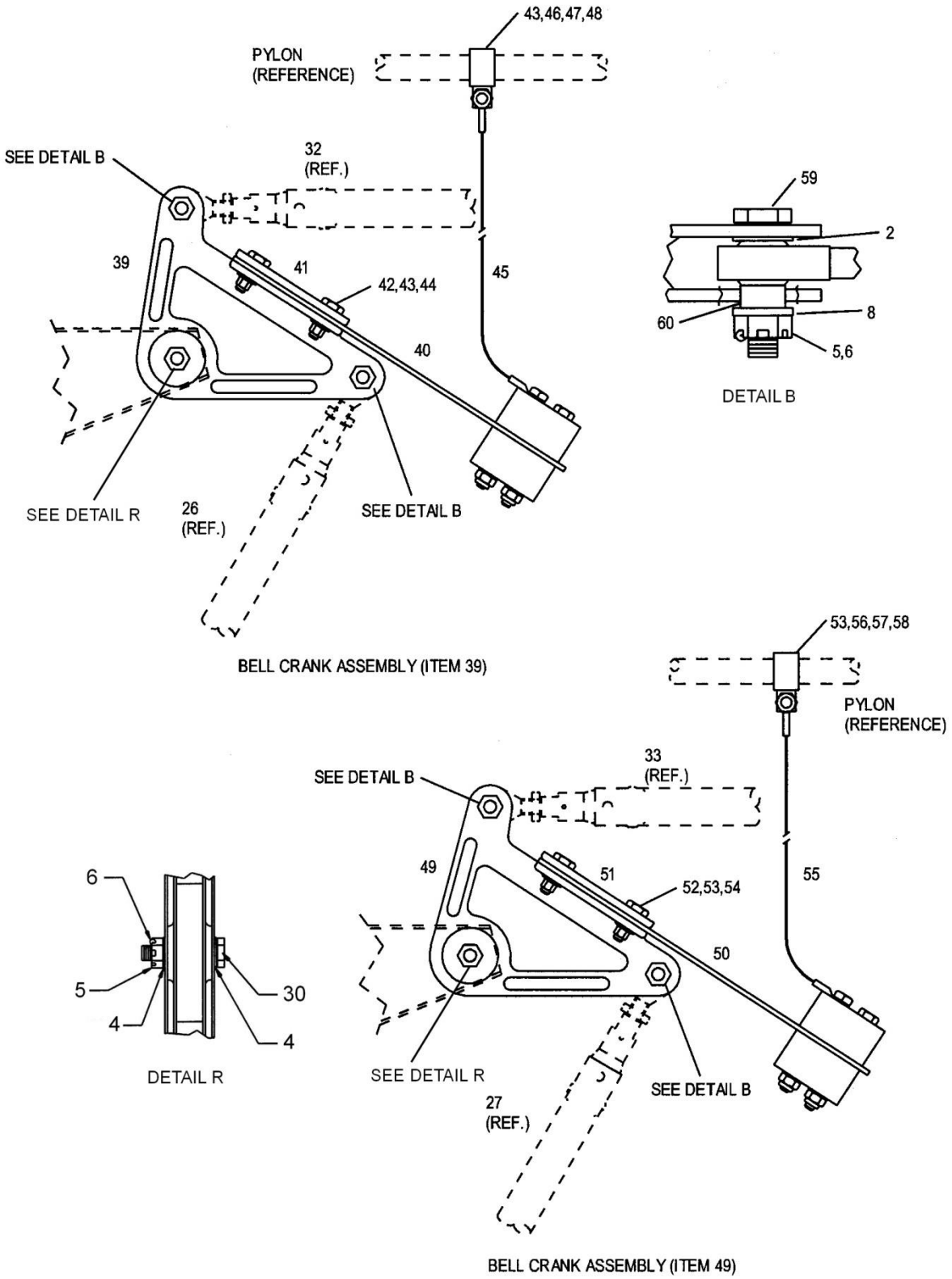

Sheet 3 of 3

FIGURE 9-2. CYCLIC CONTROL TUBE AND BELLCRANK INSTALLATION

UNCONTROLLED COPY WHEN DOWNLOADED OR PRINTED

Visit www.enstromhelicopter.com for instructions to order an original manual and to register for email notification of updates.

FIGURE 9-2. CYCLIC CONTROL TUBE AND BELLCRANK INSTALLATION

ITEM NUMBER	PART NUMBER	DESCRIPTION	QTY PER ASSY	EFFECTIVITY		
				TH-28	480	480B
1	NAS6204-11D	. Bolt	9	X	X	X
2	AN960-416L	. Washer	10	X	X	X
3	NAS73-4E003	. Bushing	6	X	X	X
4	AN960D416L	. Washer	46	X	X	X
5	MS17826-4	. Nut	29	X	X	X
–	MS20995C25	. Safety Wire	10 in.	X	X	X
6	MS24665-153	. Cotter Pin	27	X	X	X
7	NAS1104-9D	. Bolt	10	X	X	X
8	AN960D416	. Washer	11	X	X	X
9	4166008-21	. Bellcrank	1	X	X	X
10	NAS6204-21D	. Bolt	2	X	X	X
11	4166011-1	. Bellcrank Assembly	1	X	X	X
12	4166008-23	. Bellcrank	1	X	X	X
13	NAS1204-40D	. Bolt	1	X	X	X
14	4166050-7	. Control Tube Assembly	1	X	X	X
14	4166050-907	. Control Tube Assembly (Without Rod Ends)	1	X	X	X
15	4166050-5	. Control Tube Assembly	1	X	X	X
16	4166050-103	. Control Tube Assembly	1	X	X	X
16	4166050-903	. Control Tube Assembly (Without Rod Ends)	1	X	X	X
17	4166050-101	. Control Tube Assembly	1	X	X	X
18	4166050-107	. Control Tube Assembly	1	X	X	X
19	4166050-109	. Control Tube Assembly	1	X	X	X
20*	HMVV4M	. . Bearing Rod End	1	X	X	X
21*	AN316-4R	. . Nut	1	X	X	X
22*	HMLVV4M	. . Bearing Rod End	1	X	X	X
23*	AN316-4L	. . Nut	1	X	X	X
24	4166008-29	. Bellcrank	1	X	X	X
25	4166008-25	. Bellcrank	1	X	X	X
26	4166050-105	. Control Tube Assembly	1	X	X	X
27	4166050-9	. Control Tube Assembly	1	X	X	X
28	4166008-27	. Bellcrank (Inactive)	1	X	X	
29	4166008-19	. Bellcrank (Inactive)	1	X	X	
30	NAS6204-16D	. Bolt	4	X	X	X
31	NAS6204-26D	. Bolt	3	X	X	X
32	4166050-1	. Control Tube Assembly	1	X	X	X
–	28-16156-1	. . Bearing	2	X	X	X

UNCONTROLLED COPY WHEN DOWNLOADED OR PRINTED

Visit www.enstromhelicopter.com for instructions to order an original manual and to register for email notification of updates.

FIGURE 9-2. CYCLIC CONTROL TUBE AND BELLCRANK INSTALLATION

ITEM NUMBER	PART NUMBER	DESCRIPTION	QTY PER ASSY	EFFECTIVITY		
				TH-28	480	480B
33	4166050-211	. Control Tube Assembly	1	X	X	X
34	4166031-101	. Cyclic Trim Assembly, Lateral (See Figure 9-3 for breakdown)	1	X	X	X
35	4166031-102	. Cyclic Trim Assembly, Longitudinal (See Figure 9-3 for breakdown)	1	X	X	X
36	28-16625-1	. Bushing	2	X	X	X
37	28-16203-1	. Spacer	2	X	X	X
38	NAS6204-14D	. Bolt	2	X	X	X
39**	4166024-7	. Bellcrank Assembly	1	X	X	X
–	4166024-13	. . Bellcrank	1	X	X	X
40●●	4166024-103	. . Beam Assembly	1	X	X	X
–	4166024-23	. . . Beam	REF	X	X	X
–	5453	. . . Teflon Tape	REF	X	X	X
–	4166024-37	. . . Label	REF	X	X	X
41	4166024-19	. . Stiffener	1	X	X	X
42	NAS6203-6	. . Bolt	4	X	X	X
43	AN960-10L	. . Washer	5	X	X	X
44	MS21042-3	. . Nut	4	X	X	X
45	4166024-101	. . Lanyard Assembly	1	X	X	X
46	MS21919WCJ8	. . Clamp	1	X	X	X
46	MS21919WF8	. . Clamp (Superseded by MS21919WCJ8)	1	X	X	X
47	AN3-3A	. . Bolt	1	X	X	X
48	AN365-1032A	. . Nut	1	X	X	X
49**	4166024-5	. Bellcrank Assembly	1	X	X	X
–	4166024-11	. . Bellcrank	1	X	X	X
50●●	4166024-103	. . Beam Assembly	1	X	X	X
–	4166024-23	. . . Beam	REF	X	X	X
–	5453	. . . Teflon Tape	REF	X	X	X
–	4166024-37	. . . Label	REF	X	X	X
51	4166024-19	. . Stiffener	1	X	X	X
52	NAS6203-6	. . Bolt	4	X	X	X
53	AN960-10L	. . Washer	5	X	X	X
54	MS21042-3	. . Nut	4	X	X	X
55	4166024-101	. . Lanyard Assembly	1	X	X	X
56	MS21919WCJ8	. . Clamp	1	X	X	X
56	MS21919WF8	. . Clamp (Superseded by MS21919WCJ8)	1	X	X	X
57	AN3-3A	. . Bolt	1	X	X	X
58	AN365-1032A	. . Nut	1	X	X	X

UNCONTROLLED COPY WHEN DOWNLOADED OR PRINTED

Visit www.enstromhelicopter.com for instructions to order an original manual and to register for email notification of updates.

FIGURE 9-2. CYCLIC CONTROL TUBE AND BELLCRANK INSTALLATION

ITEM NUMBER	PART NUMBER	DESCRIPTION	QTY PER ASSY	EFFECTIVITY		
				TH-28	480	480B
59†	NAS6204-11D	. Bolt	2	X	X	X
60†	NAS75-4-006	. Bushing	2	X	X	X
61	LDF-5-157	. Boot	2		X	X
62	4166052-11	. Boot Adapter	2		X	X
63	4119519-27	. Patch, Backwall, Firecurtain	2		X	X
64	6RX3/8	. Screw	8		X	X

* Used on all control tube assemblies.

** Standard equipment on 480B.

† Used only with 4166024-5 and -7 bellcrank assemblies.

●● This assembly includes life limited detail part number 4166024-23. See Table 3-1 of the TH-28/480 Series Maintenance Manual.

UNCONTROLLED COPY WHEN DOWNLOADED OR PRINTED

Visit www.enstromhelicopter.com for instructions to order an original manual and to register for email notification of updates.

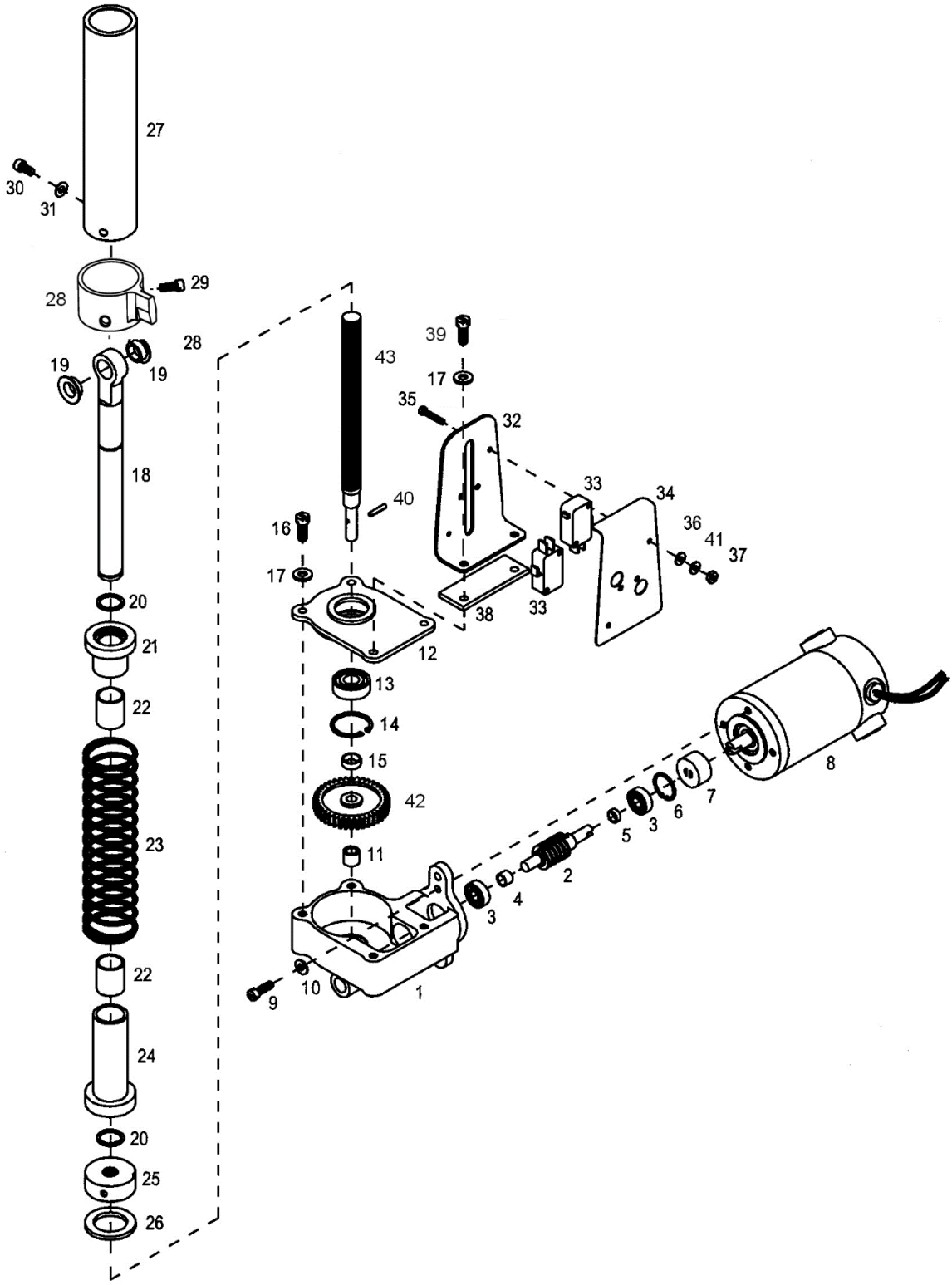

FIGURE 9-3. CYCLIC TRIM ASSEMBLY

UNCONTROLLED COPY WHEN DOWNLOADED OR PRINTED

Visit www.enstromhelicopter.com for instructions to order an original manual and to register for email notification of updates.

FIGURE 9-3. CYCLIC TRIM ASSEMBLY

ITEM NUMBER	PART NUMBER	DESCRIPTION	QTY PER ASSY	EFFECTIVITY		
				TH-28	480	480B
–	4166031-101	. Cyclic Trim Assembly (Lateral)	1	X	X	X
–	4166031-102	. Cyclic Trim Assembly (Longitudinal)	1	X	X	X
1	28-16630-3	. . Housing (Use with 4166031-101 Assembly)	1	X	X	X
1	28-16630-4	. . Housing (Use with 4166031-102 Assembly)	1	X	X	X
2	28-16620-1	. . Worm & Shaft Assembly	1	X	X	X
3	ECD066-1	. . . Bearing	2	X	X	X
4	28-16609-1	. . . Spacer	1	X	X	X
5	28-16610-1	. . . Spacer	1	X	X	X
–	MS16562-211	. . . Spring Pin	1	X	X	X
6	N5000-62-PP	. . Retaining Ring	1	X	X	X
7°	28-16633-1	. . Torque Coupling	1	X	X	X
7	J-3459-8	. . Coupling	1	X	X	X
8	210A155	. . Motor 24 Volts DC	1	X	X	X
9	AN503-8-8	. . Screw	2	X	X	X
10	AN960-8L	. . Washer	2	X	X	X
11	B46-2 1/2	. . Bearing	1	X	X	X
12	28-16632-1	. . . Cover	1	X	X	X
13	ECD034-11	. . . Bearing	1	X	X	X
14	N5000-87	. . . Retaining Ring	1	X	X	X
15	28-16608-13	. . . Spacer	1	X	X	X
16	AN502-10-8	. . Screw	2	X	X	X
17	AN960-10	. . Washer	4	X	X	X
–	4166031-106	. . Spring Capsule Light	1	X	X	X
–	4166031-107	. . Spring Capsule Medium	1	X	X	X
–	4166031-108	. . Spring Capsule Heavy	1	X	X	X
18	4166034-3	. . . Shaft Assembly	1	X	X	X
19	28-16201-1	. . . . Bearing	2	X	X	X
20	N5108-56-PP	. . . Retaining Ring	2	X	X	X
21	28-16604-1	. . . Retainer	1	X	X	X
22	09-DU-12	. . . Bearing	2	X	X	X
23*	28-16601-1	. . . Spring-Light	1	X	X	X
23*	ECD4031-11	. . . Spring-Medium	1	X	X	X
23*	ECD4031-13	. . . Spring-Heavy	1	X	X	X
24	28-16603-1	. . . Retainer	1	X	X	X
25	28-16611-15	. . . Nut	1	X	X	X

UNCONTROLLED COPY WHEN DOWNLOADED OR PRINTED

Visit www.enstromhelicopter.com for instructions to order an original manual and to register for email notification of updates.

FIGURE 9-3. CYCLIC TRIM ASSEMBLY

ITEM NUMBER	PART NUMBER	DESCRIPTION	QTY PER ASSY	EFFECTIVITY		
				TH-28	480	480B
–◊	4166032-1	. . . Shim (0.001”)	A/R	X	X	X
–◊	4166032-2	. . . Shim (0.002”)	A/R	X	X	X
–◊	4166032-3	. . . Shim (0.003”)	A/R	X	X	X
–◊	4166032-5	. . . Shim (0.005”)	A/R	X	X	X
26	28-16628-1	. . . Rubber Ring	1	X	X	X
27	28-16615-1	. . . Housing	1	X	X	X
28	28-16613-3	. . . Actuator	1	X	X	X
29	AN503-8-6	. . . Screw	3	X	X	X
30†	NK500-8-5	. . . Screw	1	X	X	X
31	AN960-8L	. . . Washer	1	X	X	X
–	28-16636-5	. . Switch Assembly	1	X	X	X
32	28-16614-5	. . . Switch Bracket	1	X	X	X
33	V3-1	. . . Switch	2	X	X	X
–	MS35206-211	. . . . Screw	6	X	X	X
–	AN936-B4	. . . . Lock Washer	6	X	X	X
34	28-16624-11	. . . Switch Shield	1	X	X	X
35	AN515-4R12	. . . Screw	4	X	X	X
36	AN935-4	. . . Lock Washer	4	X	X	X
37	AN340-4	. . . Nut	4	X	X	X
38**	4166031-11	. . Shim	A/R	X	X	X
39	AN502-10-10	. . Screw	2	X	X	X
40	MS16562-213	. . Roll Pin	1	X	X	X
41●	AN960-4L	. . . Washer	4	X	X	X
42	28-16623-1	. . Worm Gear	1	X	X	X
43	28-16617-1	. . Acme Screw Shaft Assembly	1	X	X	X

° Effectivity 480B S/N 5136 and subsequent. Retrofittable to 480 S/N 5001 – 5035.

* ECD4031-11 is used for the initial acceptance production test flight. Other springs are used as determined by test flight results. Contact Enstrom Customer Service for more information.

** Only used with 4166031-2 Longitudinal Trim Assembly.

● Hardware and preferred orientation shown. Effectivity S/N 5143 and subsequent.

◊ As required to occupy any void between the spring retainer (Item 24) and nut (Item 25) if there is looseness of the shaft assembly.

† S/N 5001 – 5135 may have the Nylok screw. AN503-8-6 is quantity 2 (Item 29).

Δ Up to two (2) allowed, if required.

UNCONTROLLED COPY WHEN DOWNLOADED OR PRINTED

Visit www.enstromhelicopter.com for instructions to order an original manual and to register for email notification of updates.

INTENTIONALLY LEFT BLANK

UNCONTROLLED COPY WHEN DOWNLOADED OR PRINTED

Visit www.enstromhelicopter.com for instructions to order an original manual and to register for email notification of updates.

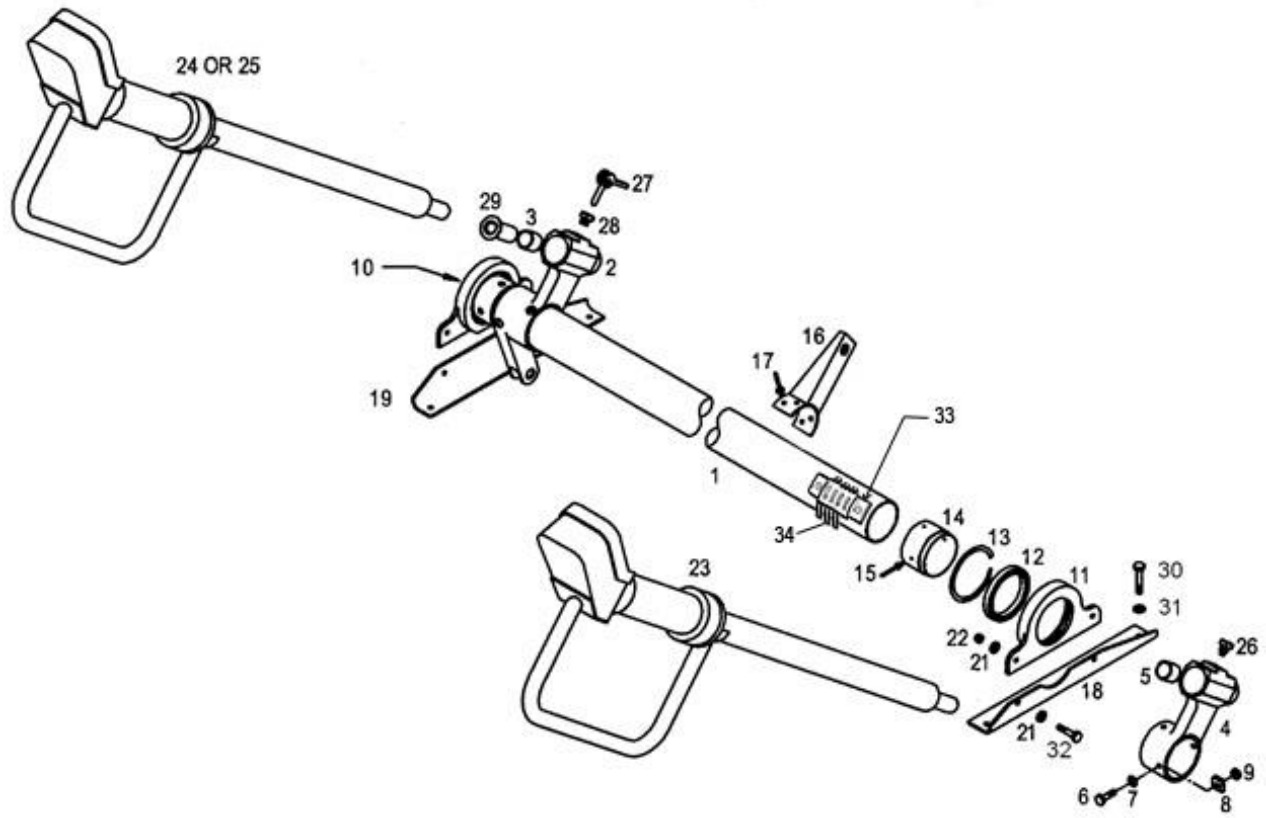

FIGURE 9-4. COLLECTIVE STICK AND TORQUE TUBE INSTALLATION

UNCONTROLLED COPY WHEN DOWNLOADED OR PRINTED

Visit www.enstromhelicopter.com for instructions to order an original manual and to register for email notification of updates.

FIGURE 9-4. COLLECTIVE STICK AND TORQUE TUBE INSTALLATION

ITEM NUMBER	PART NUMBER	DESCRIPTION	QTY PER ASSY	EFFECTIVITY		
				TH-28	480	480B
–	4167227-7	. Collective Torque Tube Assembly	1	X	X	X
1	4167225-11	. . Torque Tube	1	X	X	X
2	4167213-19	. . Stick Fitting	1	X	X	X
3	10-DU-10	. . . Bearing	1	X	X	X
4	4167213-21	. . Stick Fitting	1	X	X	X
5	10-DU-10	. . . Bearing	1	X	X	X
6	NAS6203-6	. . Bolt	8	X	X	X
7	AN960D10L	. . Washer	8	X	X	X
8	4167242-11	. . Shim	8	X	X	X
9	MS21042-3	. . Nut	8	X	X	X
10	4167230-1	. . Bearing Retainer Assembly	2	X	X	X
11	4167229-11	. . . Bearing Block	1	X	X	X
12	MS21428-44	. . . Bearing	1	X	X	X
13	VH-225-S02	. . . Retainer Ring	1	X	X	X
14	4167211-15	. . . Sleeve	1	X	X	X
15	CR3213-4-02	. . Rivet	14	X	X	X
16	4164017-3	. . Bracket	1	X	X	X
17	CR3213-5-02	. . Rivet	4	X	X	X
18	4167232-13	. Bearing Support	1	X	X	X
19	4167233-13	. Bearing Support	1	X	X	X
21●	AN960D10L	. Washer	8			X
21●	AN960KD10L	. Washer (Superseded by AN960D10L)	12	X	X	X
22	MS21042-3	. Nut	4	X	X	X
23°	4199046-3	. Collective Stick Assembly/Installation - Pilot	1	X	X	X
23°	4199046-R	. Collective Stick Assembly/Installation - Pilot	1	X	X	X
23**	4199080-903	. Collective Stick Assembly - Pilot	1			X
24	4199011-3	. Collective Stick Assembly/Installation - Copilot	1	X		
25**	4199080-901	. Collective Stick Assembly/Installation - Copilot	1			X
25	4199046-1	. Collective Stick Assembly/Installation - Copilot	1	X	X	X
26*	4167324-15	. Bolt	1	X	X	X
27	ABC6114	. Expando Pin	1		X	X
28	4167231-13	. Insert	1		X	X
29	4164006-11	. Sleeve	1		X	X
30●	AN3-11A	. Bolt	4			X

UNCONTROLLED COPY WHEN DOWNLOADED OR PRINTED

Visit www.enstromhelicopter.com for instructions to order an original manual and to register for email notification of updates.

FIGURE 9-4. COLLECTIVE STICK AND TORQUE TUBE INSTALLATION

ITEM NUMBER	PART NUMBER	DESCRIPTION	QTY PER ASSY	EFFECTIVITY		
				TH-28	480	480B
31●	AN960-10L	. Washer	4			X
32●	AN3-4A	. Bolt	4			X
33†	4199072-11	. Actuator Contactor Positioner	1			X
–	CR3213-5-04	. . Rivet	2			X
–	MS16998-10L	. . Cap Screw	3			X
–	NAS620-6L	. . Washer	3			X
34†	4199072-13	. Actuator Contactor	3			X

* TH-28 quantity: 2 each.

** 480B S/N 5136 and subsequent.

● Effectivity 480B S/N 5144 and subsequent.

† Effectivity 480B S/N 5176 and subsequent. Retrofittable to 480B S/N 5042 and subsequent.

° For replacement of P/N 4199046-3, contact Enstrom Customer Service to obtain replacement P/N 4199046-R through Enstrom's parts exchange program.

UNCONTROLLED COPY WHEN DOWNLOADED OR PRINTED

Visit www.enstromhelicopter.com for instructions to order an original manual and to register for email notification of updates.

INTENTIONALLY LEFT BLANK

UNCONTROLLED COPY WHEN DOWNLOADED OR PRINTED

Visit www.enstromhelicopter.com for instructions to order an original manual and to register for email notification of updates.

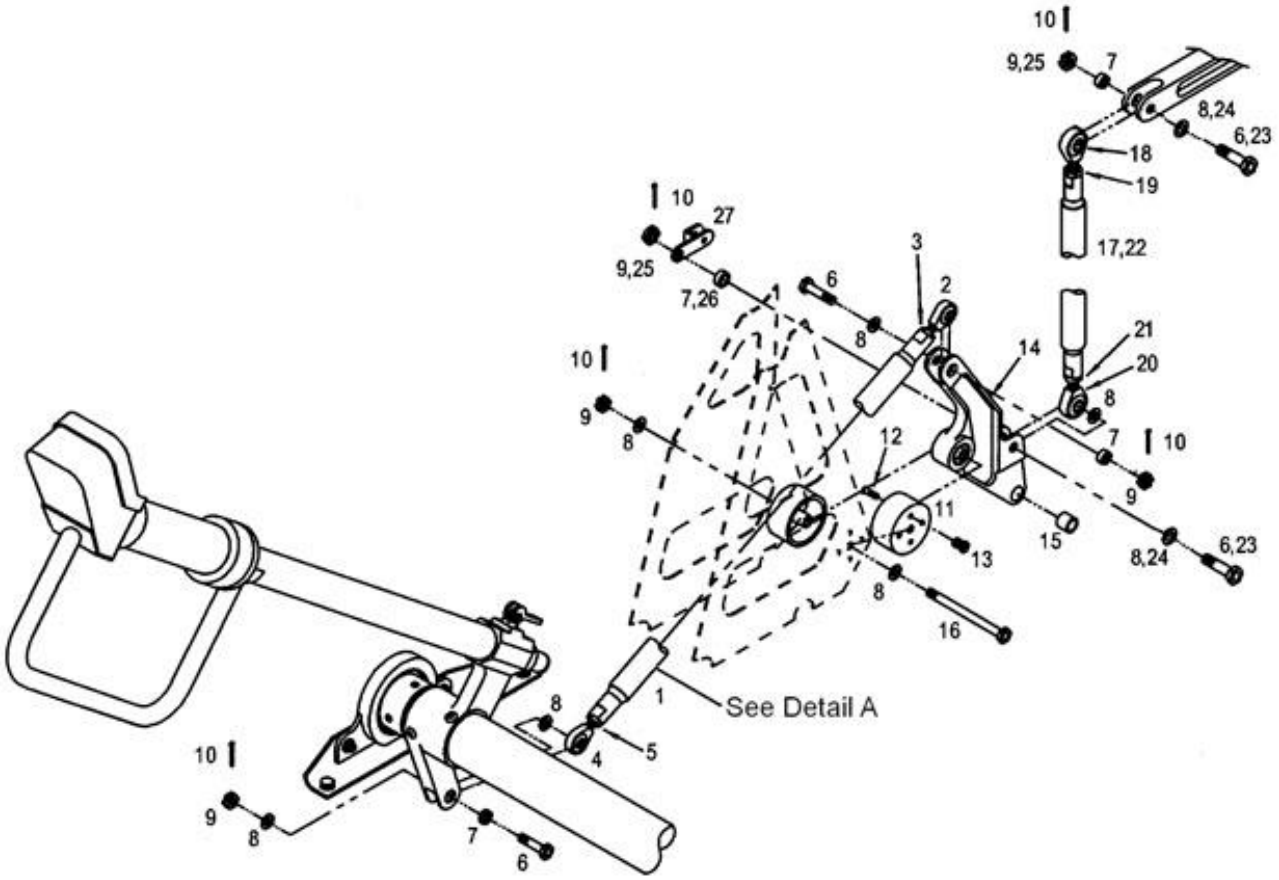

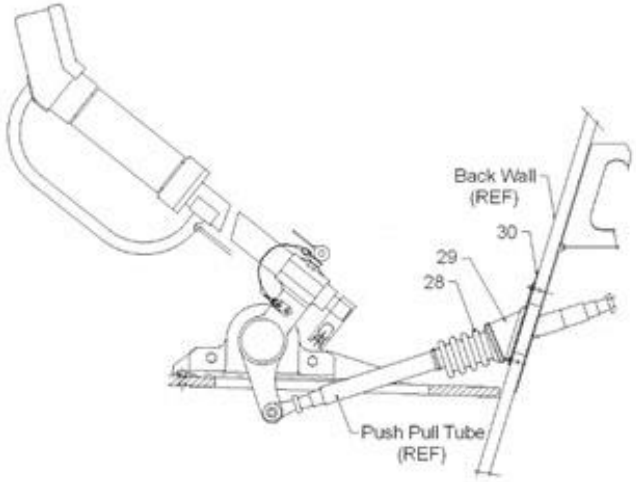

DETAIL A
View Looking Right Side Outboard

FIGURE 9-5. COLLECTIVE CONTROL TUBE AND BELLCRANK INSTALLATION

UNCONTROLLED COPY WHEN DOWNLOADED OR PRINTED

Visit www.enstromhelicopter.com for instructions to order an original manual and to register for email notification of updates.

FIGURE 9-5. COLLECTIVE CONTROL TUBE AND BELLCRANK INSTALLATION

ITEM NUMBER	PART NUMBER	DESCRIPTION	QTY PER ASSY	EFFECTIVITY		
				TH-28	480	480B
–	4167001	Collective Control Installation	REF	X	X	X
1	4166050-201	. Control Tube Assembly	1	X	X	X
–	4166050-901	. . Control Tube Assembly (Rod without Ends or Hardware)	1	X	X	X
2	HMVV4M	. . Bearing, Rod End	1	X	X	X
3	AN316-4R	. . Nut	1	X	X	X
4	HMLVV4M	. . Bearing, Rod End	1	X	X	X
5	AN316-4L	. . Nut	1	X	X	X
6	NAS6204-12D	. Bolt	4	X	X	X
7	NAS73-4E004	. Bushing	4	X	X	X
8	AN960-416L	. Washer	8	X	X	X
9	MS17826-4	. Nut	5	X	X	X
10	MS24665-153	. Cotter Pin	5	X	X	X
11	4167311-11	. Bearing Support	2	X	X	X
12	HL18PB5-3	. Hi-Lok® Pin	8	X	X	X
13	HL70-5	. Hi-Lok® Collar	8	X	X	X
14	4167313-3	. Bellcrank Assembly	1	X	X	X
14* †	4167313-1	. Bellcrank Assembly	1	X	X	
15	AA521-8	. . Bushing	1	X	X	X
16	NAS6204-46D	. Bolt	1	X	X	X
17	4166050-209	. Control Tube Assembly	1	X	X	X
18	HMVV4M	. . Bearing, Rod End	1	X	X	X
19	AN316-4R	. . Nut	1	X	X	X
20	HMLVV4M	. . Bearing, Rod End	1	X	X	X
21	AN316-4L	. . Nut	1	X	X	X
22*	4166050-205	. Control Tube Assembly	1	X	X	
–	HMVV5M	. . Bearing, Rod End	1	X	X	
–	AN316-5R	. . Nut	1	X	X	
–	HMLVV5M	. . Bearing, Rod End	1	X	X	
–	AN316-5L	. . Nut	1	X	X	
23*	NAS6205-12D	. Bolt	2	X	X	
24*	AN960-516L	. Washer	2	X	X	
25*	MS17826-5	. Nut	2	X	X	
26*	NAS73-5E003	. Bushing	1	X	X	
27*	4164014-43	. Clevis Fitting (Used with 4167313-1)	1	X	X	
28	LDF-5-157	. Boot, Neoprene, Bellows Type	1		X	X

UNCONTROLLED COPY WHEN DOWNLOADED OR PRINTED

Visit www.enstromhelicopter.com for instructions to order an original manual and to register for email notification of updates.

FIGURE 9-5. COLLECTIVE CONTROL TUBE AND BELLCRANK INSTALLATION

ITEM NUMBER	PART NUMBER	DESCRIPTION	QTY PER ASSY	EFFECTIVITY		
				TH-28	480	480B
29	4166052-13	. Boot Adapter	1		X	X
30	4119519-25	. Patch Backwall Firecurtain	1		X	X

* Used on TH-28 Serial Number 3006; 480 Serial Number 5001 - 5012 and 5015.

† Requires Collective Walking Beam Assembly, P/N 4167316-5.

UNCONTROLLED COPY WHEN DOWNLOADED OR PRINTED

Visit www.enstromhelicopter.com for instructions to order an original manual and to register for email notification of updates.

INTENTIONALLY LEFT BLANK

UNCONTROLLED COPY WHEN DOWNLOADED OR PRINTED

Visit www.enstromhelicopter.com for instructions to order an original manual and to register for email notification of updates.

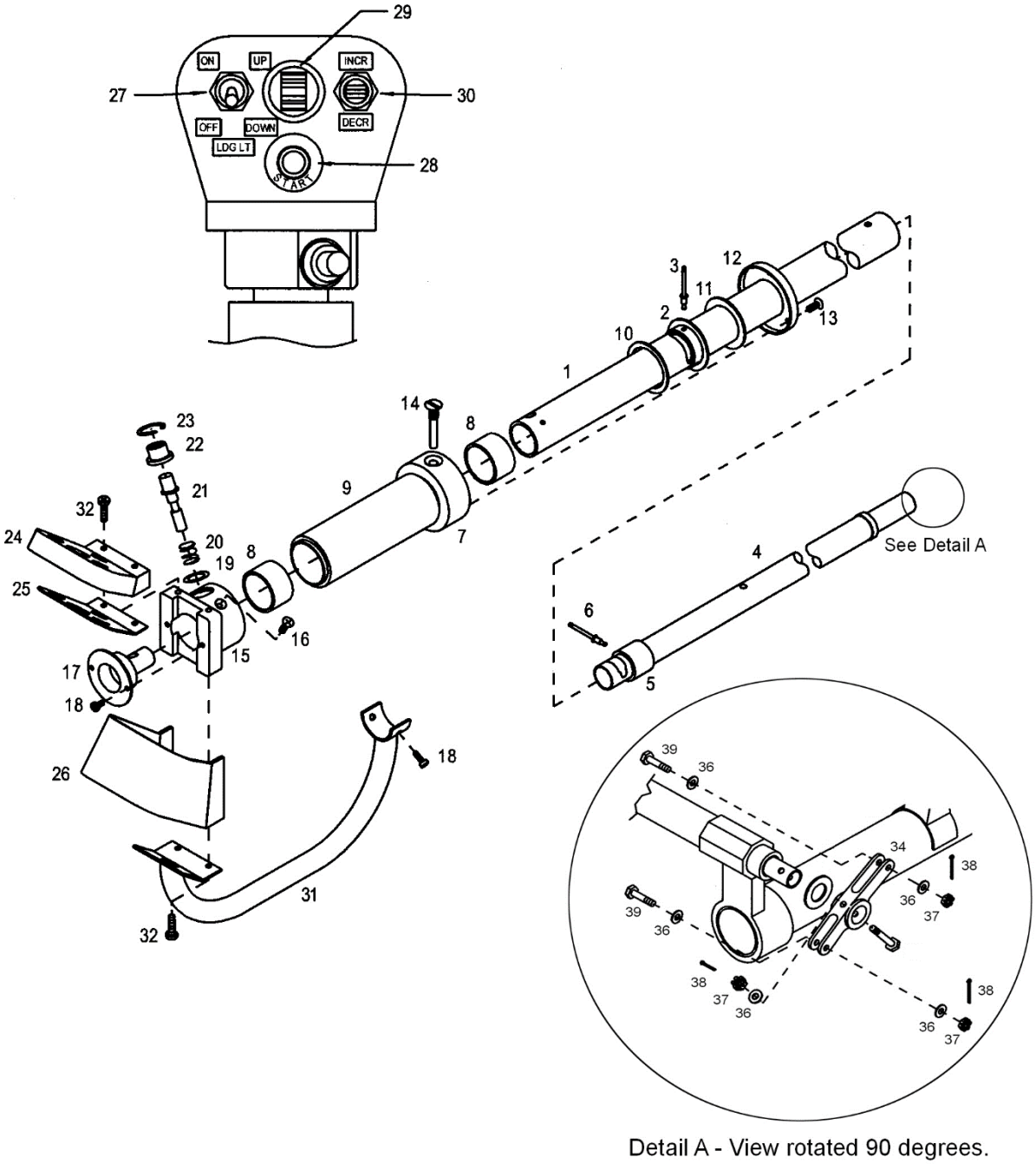

FIGURE 9-6. COLLECTIVE STICK – PILOT (S/N 5135 AND PRIOR)

UNCONTROLLED COPY WHEN DOWNLOADED OR PRINTED

Visit www.enstromhelicopter.com for instructions to order an original manual and to register for email notification of updates.

FIGURE 9-6. COLLECTIVE STICK – PILOT (S/N 5135 AND PRIOR)

ITEM NUMBER	PART NUMBER	DESCRIPTION	QTY PER ASSY	EFFECTIVITY		
				TH-28	480	480B
–*	4199046-3	. Collective Stick Assembly/Installation - Pilot	1	X	X	X
–*	4199046-3-R	. Collective Stick Assembly/Installation - Pilot	1	X	X	X
–	4167326-9	. Collective Stick Assembly - Pilot	1	X	X	X
1*	4167322-21	. . Collective Stick	1	X	X	X
2	4167322-23	. . . Retainer	1	X	X	X
3	4167322-19	. . . Rivet	3	X	X	X
4*	4167321-5	. . Torque Tube Assembly	1	X	X	X
5	4167322-17	. . . Bearing	1	X	X	X
6	CR3212-4-02	. . . Rivet	1	X	X	X
7	4167323-15	. . Grip	1	X	X	X
8	18-DU-12	. . Bearing	2	X	X	X
9	4167241-11	. . Foam Grip	1	X	X	X
9	28-16042-11	. . Foam Grip (Superseded by 4167241-11)	1	X	X	X
10	4167323-17	. . Thrust Washer	1	X	X	X
11	4167323-11	. . Thrust Washer	1	X	X	X
12	4167323-13	. . Throttle Cap	1	X	X	X
13	NPS24694S5	. . Screw	3	X	X	X
14	4167323-19	. . Torque Pin	1	X	X	X
15	4167325-17	. . Stick Fitting	1	X	X	X
16	NPS24694S5	. . Screw	3	X	X	X
17	4167325-15	. . Guide	1	X	X	X
17	4167325-19	. . Guide (Alternate)	1	X	X	X
18	MS35206-225	. . Screw	4	X	X	X
19	SSR-0075-S17	. . Wave Washer	1	X	X	X
20	C0455-039-0500M	. . Spring	1	X	X	X
21	4167324-25	. . Detent Button	1	X	X	X
22	4167324-21	. . Spring Retainer	1	X	X	X
23	5008-75	. . Retaining Ring	1	X	X	X
24	4167327-13	. . Cover	1	X	X	X
25	4167324-17	. . Plate	1	X	X	X
26	4167327-11	. . Switch Box	1	X	X	X
27	MS27718-22-1	. . Switch	1	X	X	X
28	P4-900054	. . Switch	1	X	X	X
29	T2-0055	. . Switch	1	X	X	X
30	13AT401-T2	. . Switch	1	X	X	X
31	4167328-1	. . Hand Guard	1	X	X	X
32	MS35206-225	. . Screw	4	X	X	X

UNCONTROLLED COPY WHEN DOWNLOADED OR PRINTED

Visit www.enstromhelicopter.com for instructions to order an original manual and to register for email notification of updates.

FIGURE 9-6. COLLECTIVE STICK – PILOT (S/N 5135 AND PRIOR)

ITEM NUMBER	PART NUMBER	DESCRIPTION	QTY PER ASSY	EFFECTIVITY		
				TH-28	480	480B
33	–	Removed from Illustration				
34	4164004-11	. Bellcrank	1	X	X	X
35	–	Removed from Illustration				
36	AN960-10L	. Washer	4	X	X	X
37	MS17826-3	. Nut	4	X	X	X
38	MS24665-153	. Cotter Pin	4	X	X	X
39	NAS6203-9D	. Bolt	3	X	X	X

* For replacement of P/N 4199046-3 components, contact Enstrom Customer Service to obtain replacement P/N 4199046-3-R through Enstrom's parts exchange program.

UNCONTROLLED COPY WHEN DOWNLOADED OR PRINTED

Visit www.enstromhelicopter.com for instructions to order an original manual and to register for email notification of updates.

INTENTIONALLY LEFT BLANK

UNCONTROLLED COPY WHEN DOWNLOADED OR PRINTED

Visit www.enstromhelicopter.com for instructions to order an original manual and to register for email notification of updates.

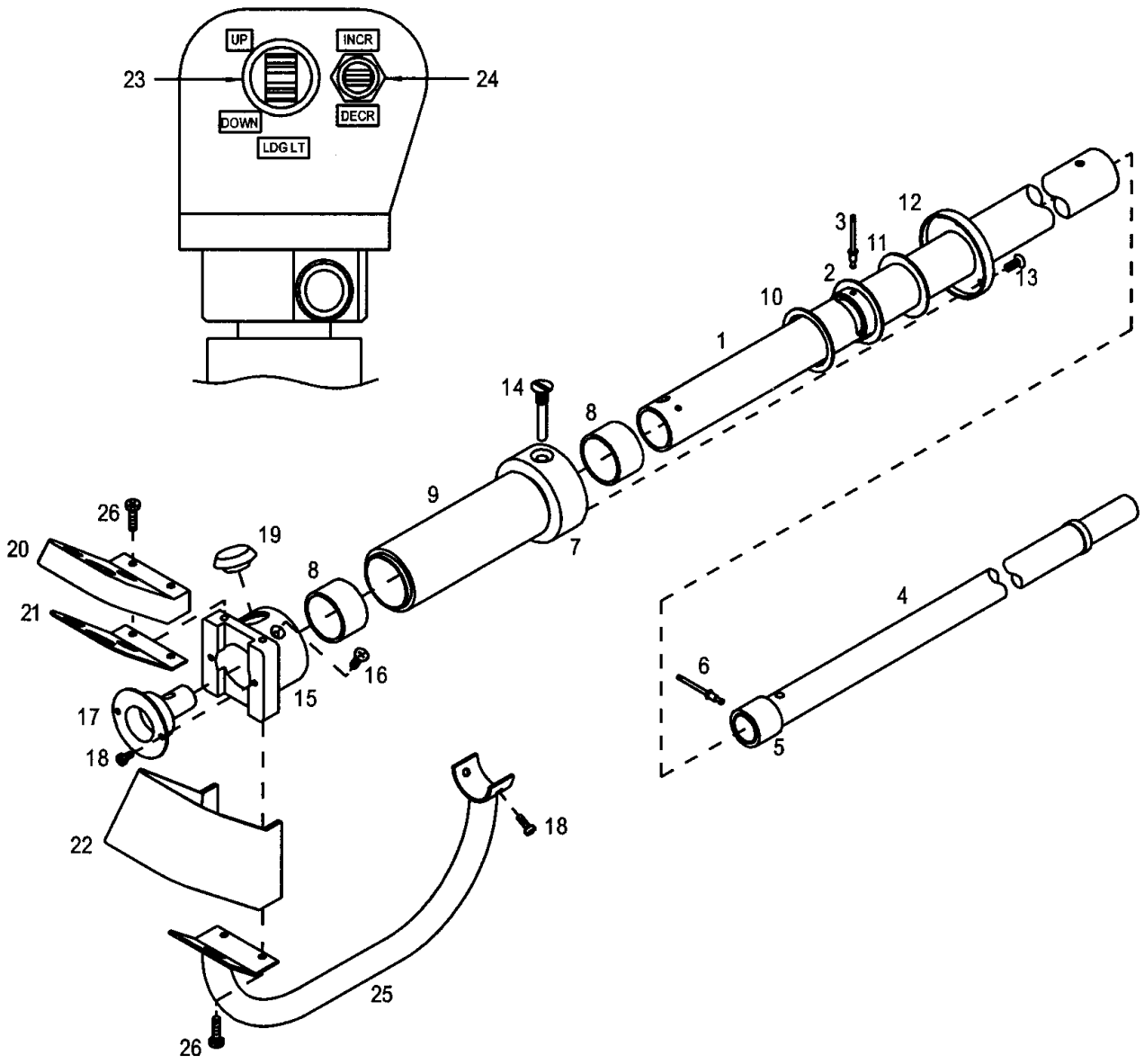

See Figure 6-6 for collective installation.

FIGURE 9-7. COLLECTIVE STICK – COPILOT (S/N 5135 AND PRIOR)

UNCONTROLLED COPY WHEN DOWNLOADED OR PRINTED

Visit www.enstromhelicopter.com for instructions to order an original manual and to register for email notification of updates.

FIGURE 9-7. COLLECTIVE STICK – COPILOT (S/N 5135 AND PRIOR)

ITEM NUMBER	PART NUMBER	DESCRIPTION	QTY PER ASSY	EFFECTIVITY		
				TH-28	480	480B
–	4199011-3	. Collective Stick Assembly/Installation - Copilot	1	X		
–	4199046-1	. Collective Stick Assembly/Installation - Copilot	1		X	X
–	4167326-7	. Collective Stick Assembly - Copilot	1	X		
–*	4167226-3	. Collective Stick Assembly - Copilot	1		X	X
1	4167322-21	. . Collective Stick	1	X	X	X
2	4167322-23	. . . Retainer	1	X	X	X
3	4167322-19	. . . Rivet	3	X	X	X
4	4167321-7	. . Torque Tube Assembly	1	X		
4	4167321-9	. . Torque Tube Assembly	1		X	X
5	4167322-17	. . . Bearing	1	X	X	X
6	CR3212-4-02	. . . Rivet	1	X	X	X
7	4167323-15	. . Grip	1	X	X	X
8	18-DU-12	. . Bearing	2	X	X	X
9	4167241-11	. . Foam Grip	1	X	X	X
9	28-16042-11	. . Foam Grip (Superseded by 4167241-11)	1	X	X	X
10	4167323-17	. . Thrust Washer	1	X	X	X
11	4167323-11	. . Thrust Washer	1	X	X	X
12	4167323-13	. . Throttle Cap	1	X	X	X
13	NPS24694S5	. . Screw	3	X	X	X
14	4167323-19	. . Torque Pin	1	X	X	X
15	4167325-17	. . Stick Fitting	1	X	X	X
16	NPS24694S5	. . Screw	3	X	X	X
17	4167325-15	. . Guide	1	X	X	X
18	MS35206-225	. . Screw	4	X	X	X
19	BPF-3/4	. . Plug	1	X	X	X
20	4167327-17	. . Cover	1	X	X	X
21	4167328-11	. . Plate	1	X	X	X
22	4167327-15	. . Switch Box	1	X	X	X
23	T2-0055	. . Switch	1	X	X	X
24	13AT401-T2	. . Switch	1	X	X	X
25	4167328-1	. . Hand Guard	1	X	X	X
26	MS35206-225	. . Screw	4	X	X	X

* Removable

UNCONTROLLED COPY WHEN DOWNLOADED OR PRINTED

Visit www.enstromhelicopter.com for instructions to order an original manual and to register for email notification of updates.

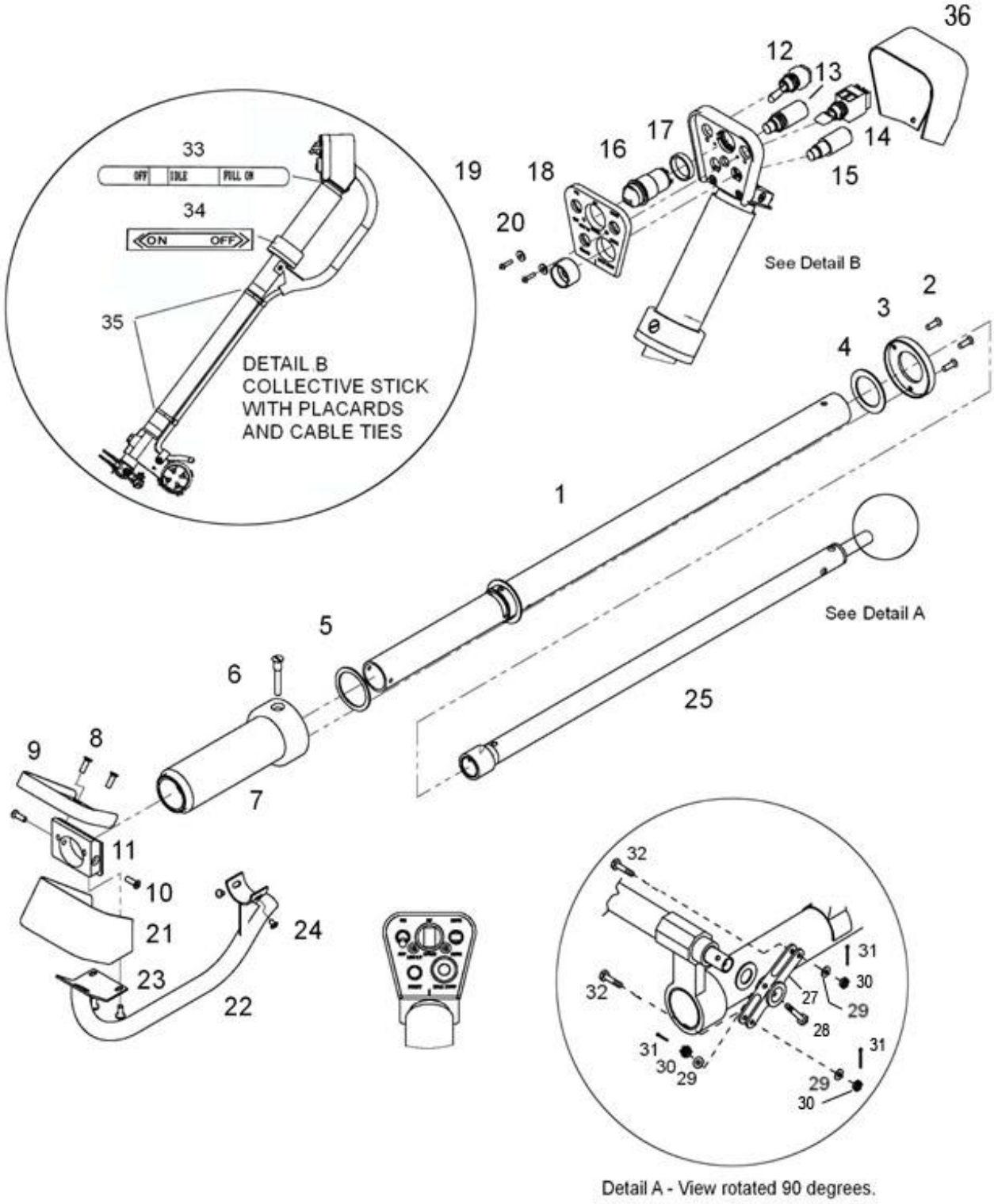

FIGURE 9-7.1 COLLECTIVE STICK – PILOT (S/N 5136 AND SUBS.)

UNCONTROLLED COPY WHEN DOWNLOADED OR PRINTED

Visit www.enstromhelicopter.com for instructions to order an original manual and to register for email notification of updates.

FIGURE 9-7.1 COLLECTIVE STICK ASSEMBLY – PILOT (S/N 5136 AND SUBS.)

ITEM NUMBER	PART NUMBER	DESCRIPTION	QTY PER ASSY	EFFECTIVITY		
				TH-28	480	480B
–	4199080-903	Collective Stick Assy (Pilot)	1			X
–	4167340-3	. Collective Stick Assembly (Pilot)	1			X
1	4167322-5	. Collective Stick	1			X
2	NPS24694S5	. . Screw	3			X
3	4167323-13	. Throttle Cap	1			X
4	4167323-11	. Thrust Washer	1			X
5	4167323-17	. Thrust Washer	1			X
6	4167323-19	. Torque Pin	1			X
7	4167323-15	. . Grip	1			X
–	4167241-11	. . . Foam Grip	1			X
8*	MS24693-S50	. . . Screw	2			X
8	AN507-832R8	. . . Screw (Superseded by MS24693-S50)	2			X
9	4167324-27	. . Switch Plate	1			X
10*	MS24693-S50	. . Screw	2			X
10	AN507-832R8	. . Screw (Superseded by MS24693-S50)	2			X
11	4167325-21	. . Housing	1			X
12	MS27718-22-1	. Switch (Landing Light)	1			X
13	P4-900054	. Switch (Start)	1			X
14	13AT401-T2	. Switch (Increase/Decrease)	1			X
15	P1-90254	. Switch (Idle Stop)	1			X
16	T2-0055	. Switch (Landing Light)	1			X
17	4167324-29	. Switch Spacer	1			X
18†	ECD4060-15	. Illuminated Panel	1			X
18	ECD4060-11	. Illuminated Panel Collective	1			X
19	MS35214-15	. Screw	2			X
20	90D030N-MOD-2	. Washer	2			X
21	4167327-19	. . Switch Plate Cover	1			X
22	4167328-3	. . Hand Guard Assembly	1			X
23	MS35206-244	. . Screw	2			X
23	AN515-8R7	. . Screw (Alternate)	2			X
24	MS35206-225	. . Screw	2			X
25	4167321-103	. Torque Tube Assembly (Pilot)	1			X
26	–	Removed from Illustration				
27	4164004-11	. Bellcrank	1	X	X	X
28	NAS6203-14D	. Bolt	1	X	X	X
29**	NAS1149F0332P	. Washer	4	X	X	X
29	AN960-10L	. Washer (Superseded by NAS1149F0332P)	4	X	X	X

UNCONTROLLED COPY WHEN DOWNLOADED OR PRINTED

Visit www.enstromhelicopter.com for instructions to order an original manual and to register for email notification of updates.

FIGURE 9-7.1 COLLECTIVE STICK ASSEMBLY – PILOT (S/N 5136 AND SUBS.)

ITEM NUMBER	PART NUMBER	DESCRIPTION	QTY PER ASSY	EFFECTIVITY		
				TH-28	480	480B
30	MS17826-3	. Nut	4	X	X	X
31	MS24665-153	. Cotter Pin	4	X	X	X
32	NAS6203-9D	. Bolt	3	X	X	X
33	4167338-11	. Placard: Throttle	1			X
34	28-16215-1	. Placard: Switch “ON-OFF”	1			X
35	PLB3S-CO	. Tie: Cable	1			X
36	4167327-19	. Switch Plate Cover	1			X

* Effectivity 480B S/N 5188 and subsequent. Retrofittable to 480 S/N 5001 – 5042, 480B S/N 5042 and subsequent.

** Effectivity 480B S/N 5223 and subsequent. Retrofittable to 480 S/N 5001 – 5042, 480B S/N 5042 and subsequent.

† Used with aircrafts equipped with pulse landing light.

UNCONTROLLED COPY WHEN DOWNLOADED OR PRINTED

Visit www.enstromhelicopter.com for instructions to order an original manual and to register for email notification of updates.

INTENTIONALLY LEFT BLANK

UNCONTROLLED COPY WHEN DOWNLOADED OR PRINTED

Visit www.enstromhelicopter.com for instructions to order an original manual and to register for email notification of updates.

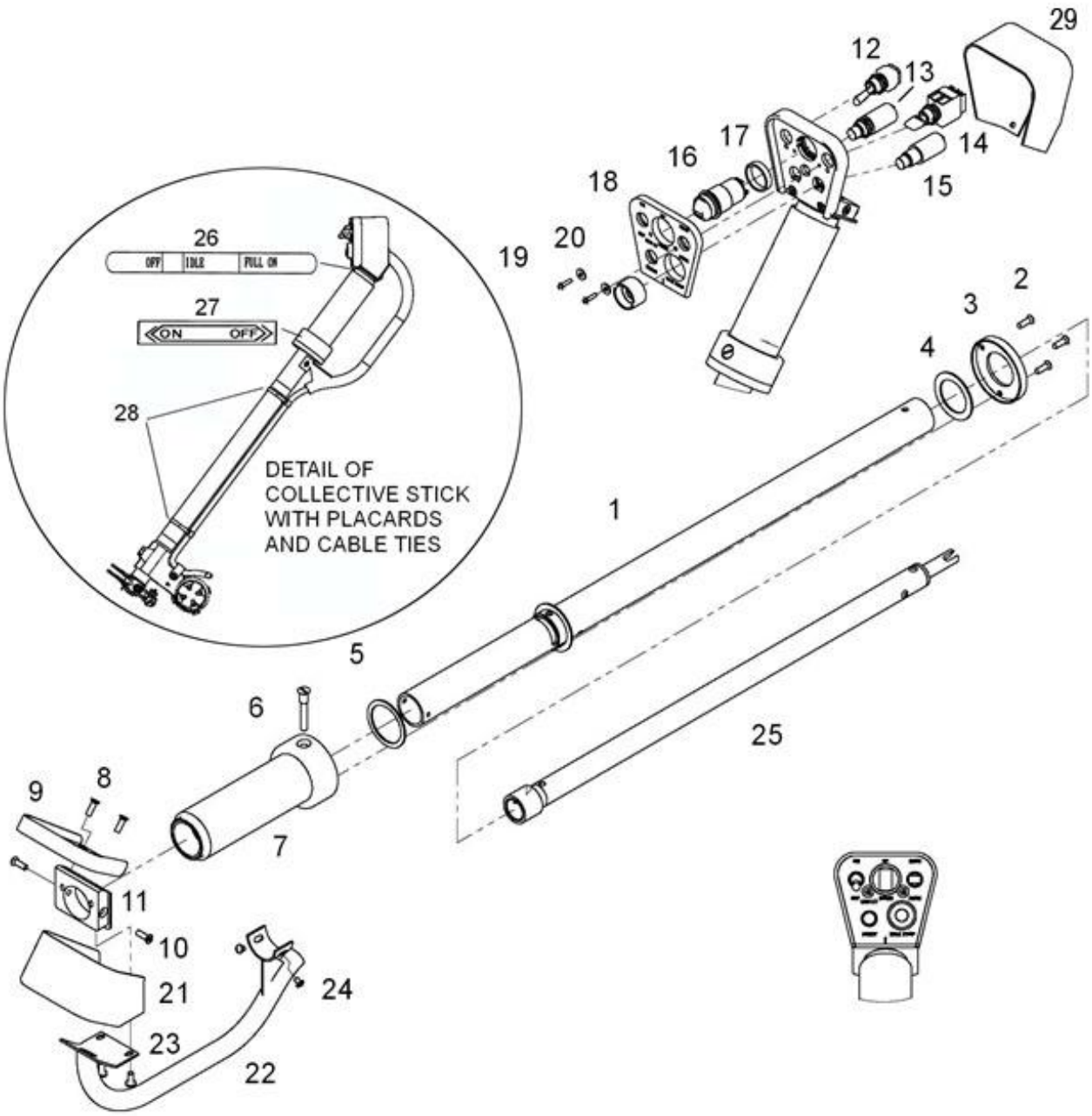

Note: See figure 6-6 for copilot collective stick attachment.

FIGURE 9-7.2 COLLECTIVE STICK – COPILOT (S/N 5136 AND SUBS.)

UNCONTROLLED COPY WHEN DOWNLOADED OR PRINTED

Visit www.enstromhelicopter.com for instructions to order an original manual and to register for email notification of updates.

FIGURE 9-7.2 COLLECTIVE STICK ASSEMBLY – COPILOT (S/N 5136 AND SUBS.)

ITEM NUMBER	PART NUMBER	DESCRIPTION	QTY PER ASSY	EFFECTIVITY		
				TH-28	480	480B
–	4199080-901	Collective Stick Assy (Copilot)	1			X
–*	4167340-5	. Collective Stick Assembly (Copilot)	1			X
–	4167340-1	. Collective Stick Assembly (Copilot) (Superseded by 4167340-5)	1			X
1	4167322-5	. Collective Stick	1			X
2	NPS24694S5	. . Screw	3			X
3	4167323-13	. Throttle Cap	1			X
4	4167323-11	. Thrust Washer	1			X
5	4167323-17	. Thrust Washer	1			X
6	4167323-19	. Torque Pin	1			X
7	4167323-15	. . Grip	1			X
–	4167241-11	. . . Foam Grip	1			X
8**	MS24693-S50	. . . Screw	2			X
8	AN507-832R8	. . . Screw (Superseded by MS24693-S50)	2			X
9	4167324-27	. . Switch Plate	1			X
10**	MS24693-S50	. . Screw	2			X
10	AN507-832R8	. . Screw (Superseded by MS24693-S50)	2			X
11	4167325-21	. . Housing	1			X
12	MS27718-22-1	. Switch (Landing Light)	1			X
13	P4-900054	. Switch (Start)	1			X
14	13AT401-T2	. Switch (Increase/Decrease)	1			X
15	P1-90254	. Switch (Idle Stop)	1			X
16	T2-0055	. Switch (Landing Light)	1			X
17	4167324-29	. Switch Spacer	1			X
18	ECD4060-11	. Illuminated Panel Collective	1			X
19	MS35214-15	. Screw	2			X
20	90D030N-MOD-2	. Washer	2			X
21	4167327-19	. . Switch Plate Cover	1			X
22	4167328-3	. . Hand Guard Assembly	1			X
23	MS35206-244	. . Screw	2			X
23	AN515-8R7	. . Screw (Alternate)	2			X
24	MS35206-225	. . Screw	2			X
25*	4167321-105	. . Torque Tube Assembly (Co-Pilot)	1			X
25	4167321-101	. . Torque Tube Assembly (Co-Pilot) (Superseded by 4167321-105)	1			X
26	4167338-11	. Placard: Throttle	1			X
27	28-16215-1	. Placard: Switch “ON-OFF”	1			X

UNCONTROLLED COPY WHEN DOWNLOADED OR PRINTED

Visit www.enstromhelicopter.com for instructions to order an original manual and to register for email notification of updates.

FIGURE 9-7.2 COLLECTIVE STICK ASSEMBLY – COPILOT (S/N 5136 AND SUBS.)

ITEM NUMBER	PART NUMBER	DESCRIPTION	QTY PER ASSY	EFFECTIVITY		
				TH-28	480	480B
28	PLB3S-CO	. Tie: Cable	1			X
29	4167327-19	. Switch Plate Cover	1			X

* Effectivity 480B S/N 5168 and subsequent. Retrofittable to 480 S/N 5001 – 5042, 480B S/N 5042 and subsequent.

** Effectivity 480B S/N 5188 and subsequent. Retrofittable to 480 S/N 5001 – 5042, 480B S/N 5042 and subsequent.

UNCONTROLLED COPY WHEN DOWNLOADED OR PRINTED

Visit www.enstromhelicopter.com for instructions to order an original manual and to register for email notification of updates.

INTENTIONALLY LEFT BLANK

UNCONTROLLED COPY WHEN DOWNLOADED OR PRINTED

Visit www.enstromhelicopter.com for instructions to order an original manual and to register for email notification of updates.

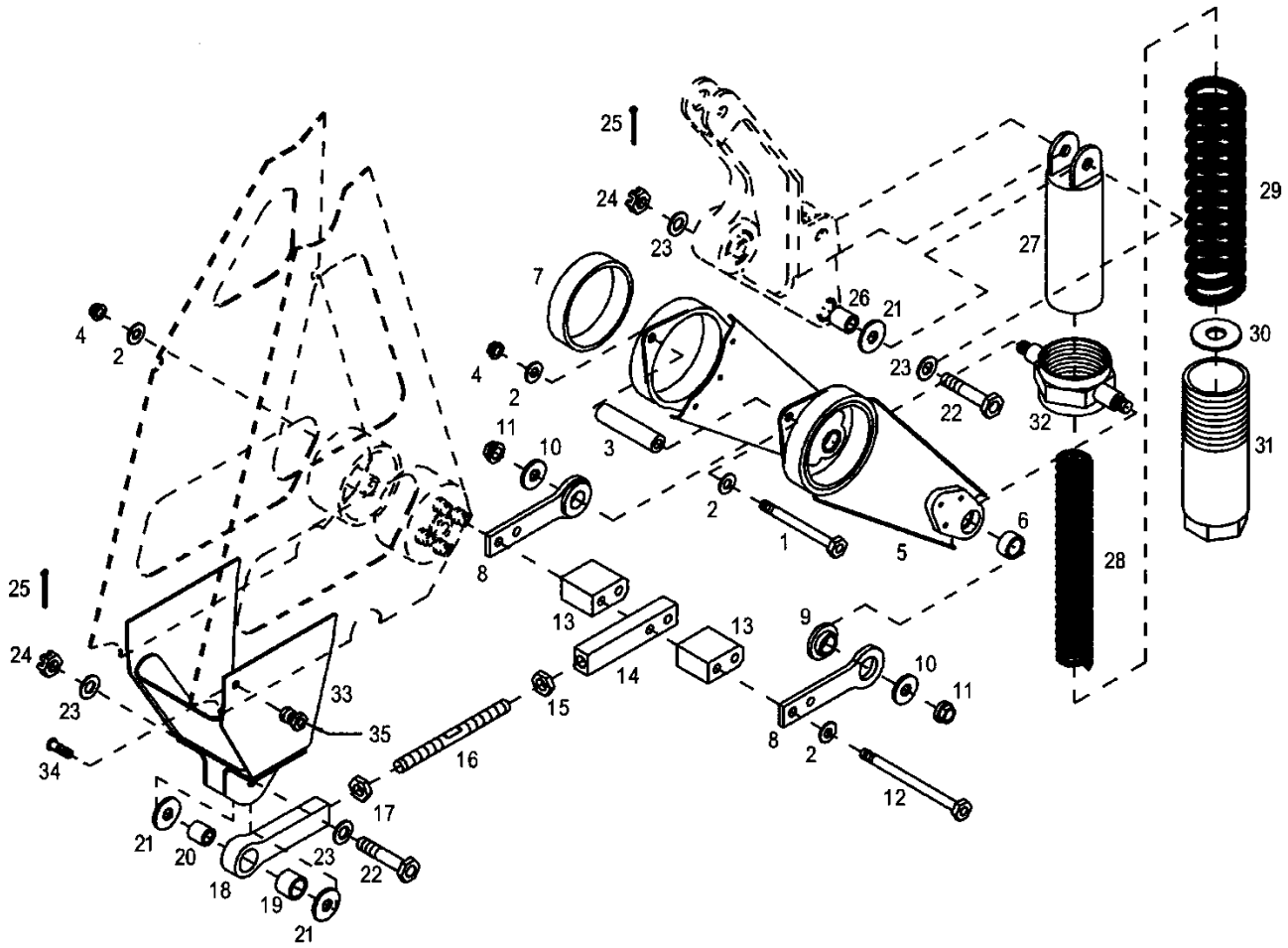

FIGURE 9-8. COLLECTIVE TRIM ASSEMBLY

UNCONTROLLED COPY WHEN DOWNLOADED OR PRINTED

Visit www.enstromhelicopter.com for instructions to order an original manual and to register for email notification of updates.

FIGURE 9-8. COLLECTIVE TRIM ASSEMBLY

ITEM NUMBER	PART NUMBER	DESCRIPTION	QTY PER ASSY	EFFECTIVITY		
				TH-28	480	480B
1	NAS6203-27	. Bolt	1	X	X	X
2	AN960-10L	. Washer	6	X	X	X
3	4167320-13	. Spacer	1	X	X	X
4	MS21042-3	. Nut	3	X	X	X
5	4167314-1	. Support Arm	2	X	X	X
6* Ξ	AA521-4	. . Bushing, Bronze	1	X	X	X
7	28-16234-6	. . Bearing	1	X	X	X
8	4167319-1	. Bracket Assembly	2	X	X	X
9	28-16239-4	. . Bearing	1	X	X	X
10	1/4 Harper	. Washer, Flat	2	X	X	X
11	MS21042-4	. Nut	3	X	X	X
12	NAS6203-38	. Bolt	2	X	X	X
13	4167320-11	. Spacer	2	X	X	X
14	28-16237-1	. Link	1	X	X	X
15	AN316-4R	. Nut	1	X	X	X
16	28-16236-1	. Tie Rod	1	X	X	X
17	AN316-4L	. Nut	1	X	X	X
18	28-16238-1	. Link Assembly	1	X	X	X
–	28-16238-3	. . Link	1	X	X	X
19	AA-521-9	. . Bearing	1	X	X	X
20	28-16258-1	. Spacer	1	X	X	X
21	1/4 Harper	. Washer, Flat	4	X	X	X
22	NAS6204-11D	. Bolt	2	X	X	X
23	AN960-416L	. Washer	4	X	X	X
24	MS17826-4	. Nut	2	X	X	X
25	MS24665-151	. Cotter Pin	2	X	X	X
26	28-16203-1	. Spacer	1	X	X	X
–	4167310-3	. Spring Capsule Assembly	1	X	X	X
27	28-16230-1	. . Spring Housing	1	X	X	X
28	28-162004-11	. . Spring (Heavy Spring Rate)	1	X	X	X
28	ECD4020-11	. . Spring (Alternate, Medium Spring Rate)	1	X	X	X
28	28-16222-1	. . Spring (Alternate, Light Spring Rate)	1	X	X	X
29	28-16229-13	. . Spring	1	X	X	X
30	3/8 Harper	. . Washer, Flat	1	X	X	X
31	28-16231-1	. . Spring Retainer	1	X	X	X
32	28-16232-1	. Spring Pivot	1	X	X	X
33	4167315-3	. End Attachment Assembly	1	X	X	X

UNCONTROLLED COPY WHEN DOWNLOADED OR PRINTED

Visit www.enstromhelicopter.com for instructions to order an original manual and to register for email notification of updates.

FIGURE 9-8. COLLECTIVE TRIM ASSEMBLY

ITEM NUMBER	PART NUMBER	DESCRIPTION	QTY PER ASSY	EFFECTIVITY		
				TH-28	480	480B
34	HL18PB5-2	. Hi-Lok® Fastener	6	X	X	X
35	HL70-5	. Hi-Lok® Collar	6	X	X	X

* Effectivity 480B S/N 5162 and subsequent. Retrofittable to 480 S/N 5001 to 5041 and 480B S/N 5042 and subsequent.

Ξ See Appendix A for equivalent part information.

UNCONTROLLED COPY WHEN DOWNLOADED OR PRINTED

Visit www.enstromhelicopter.com for instructions to order an original manual and to register for email notification of updates.

INTENTIONALLY LEFT BLANK

UNCONTROLLED COPY WHEN DOWNLOADED OR PRINTED

Visit www.enstromhelicopter.com for instructions to order an original manual and to register for email notification of updates.

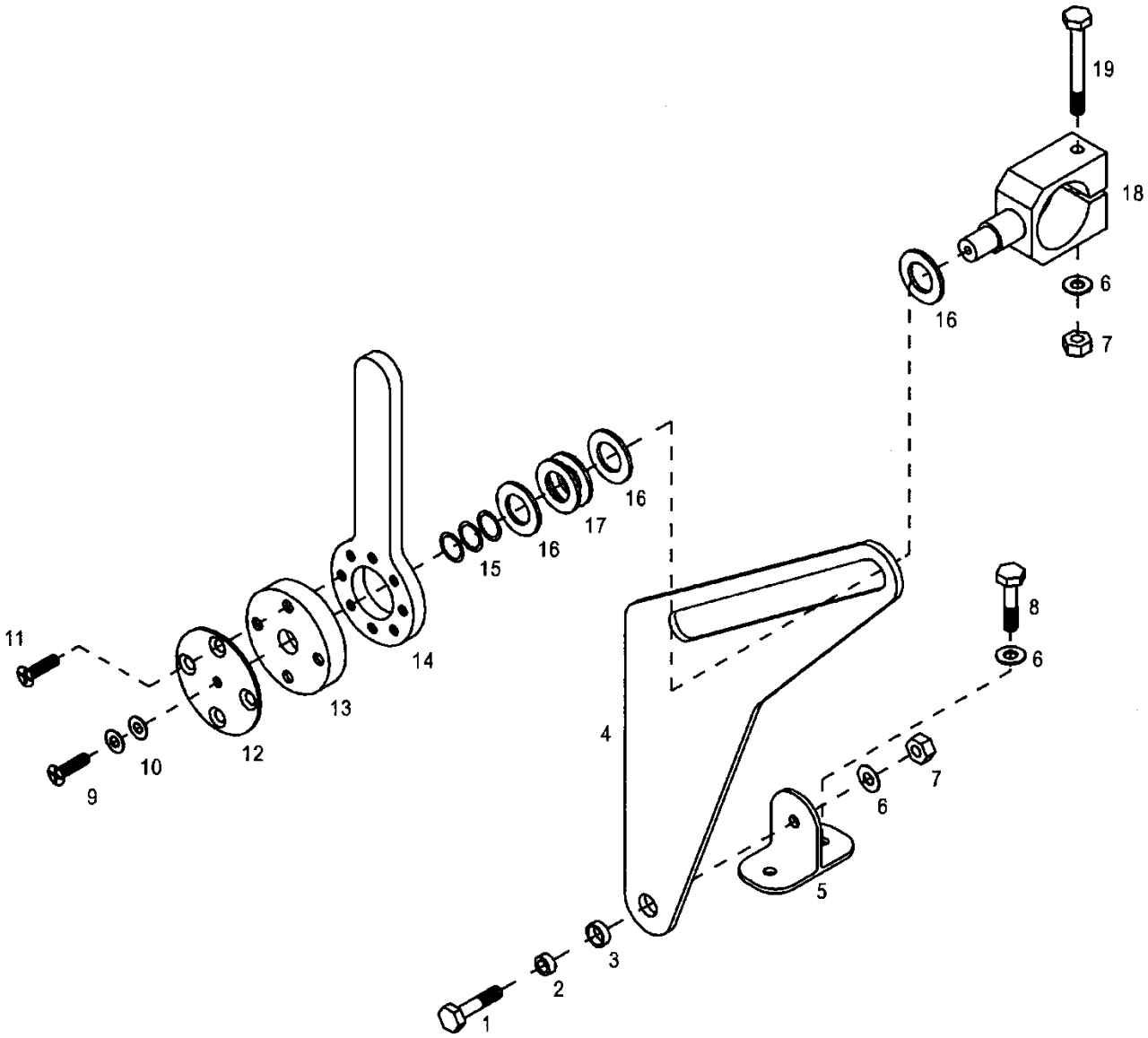

FIGURE 9-9. COLLECTIVE FRICTION ASSEMBLY

UNCONTROLLED COPY WHEN DOWNLOADED OR PRINTED

Visit www.enstromhelicopter.com for instructions to order an original manual and to register for email notification of updates.

FIGURE 9-9. COLLECTIVE FRICTION ASSEMBLY

ITEM NUMBER	PART NUMBER	DESCRIPTION	QTY PER ASSY	EFFECTIVITY		
				TH-28	480	480B
1	AN3-5A	. Bolt	1	X	X	X
2	4167292-13	. Bushing	1	X	X	X
3	4167292-11	. Bushing	1	X	X	X
4	4167291-13	. Stop Bracket	1	X	X	X
5	4167287-11	. Anchor	1	X	X	X
6	AN960-10L	. Washer	4	X	X	X
7	MS20364-1032A	. Nut	4	X	X	X
8	AN3-3A	. Bolt	2	X	X	X
9	AN526-832R-8	. Screw	1	X	X	X
10	AN960-8L	. Washer	A/R	X	X	X
11	AN507-832R-10	. Screw	4	X	X	X
12	4167276-27	. Plate	1	X	X	X
13	4167276-1	. Knob	1	X	X	X
14	4167286-11	. Lever	1	X	X	X
15	28-16524-1	. Shim Set	A/R	X	X	X
15	28-16524-3	. Shim, .020”	A/R	X	X	X
15	28-16524-4	. Shim, .015”	A/R	X	X	X
15	28-16524-5	. Shim, .005”	A/R	X	X	X
15	28-16524-6	. Shim, .003”	A/R	X	X	X
15	28-16524-7	. Shim, .002”	A/R	X	X	X
15	28-16524-8	. Shim, .001”	A/R	X	X	X
16	G06DU	. Washer	3	X	X	X
17	B1000-050-S	. Spring Washer	2	X	X	X
18	4167290-1	. Stop Assembly	1	X	X	X
19	AN3-16A	. Bolt	1	X	X	X

UNCONTROLLED COPY WHEN DOWNLOADED OR PRINTED

Visit www.enstromhelicopter.com for instructions to order an original manual and to register for email notification of updates.

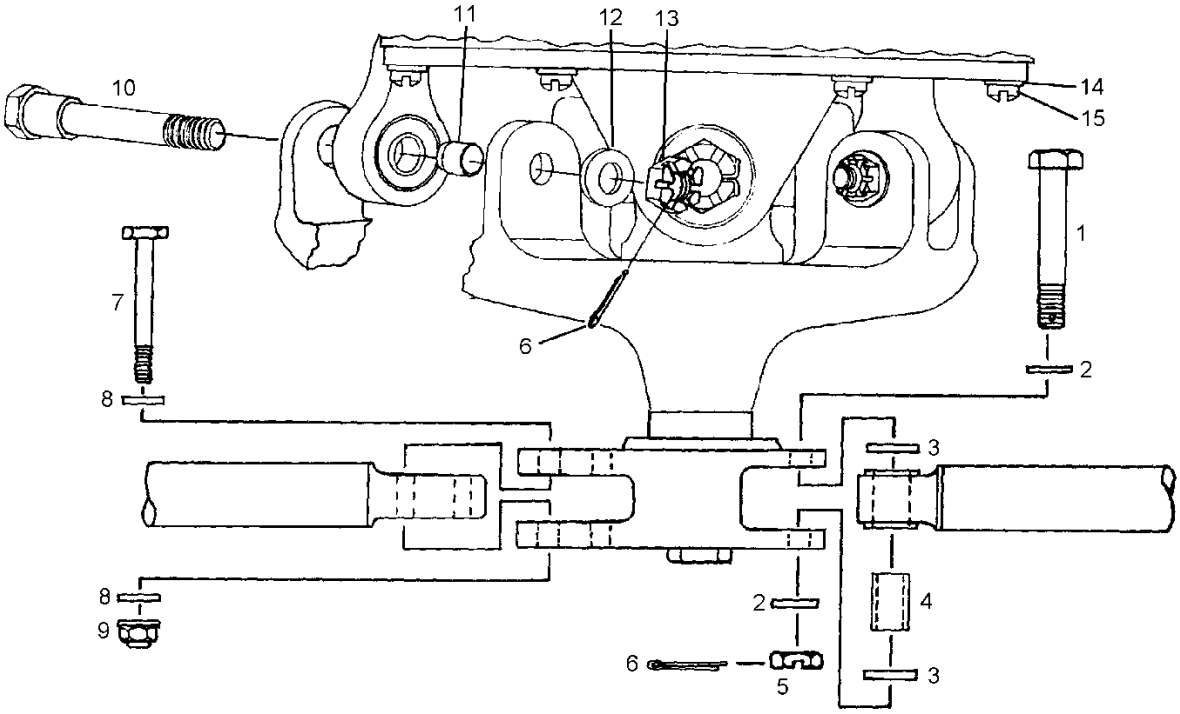

FIGURE 9-10. LOWER SWASHPLATE ASSEMBLY INSTALLATION

UNCONTROLLED COPY WHEN DOWNLOADED OR PRINTED

Visit www.enstromhelicopter.com for instructions to order an original manual and to register for email notification of updates.

FIGURE 9-10. LOWER SWASHPLATE ASSEMBLY INSTALLATION

ITEM NUMBER	PART NUMBER	DESCRIPTION	QTY PER ASSY	EFFECTIVITY		
				TH-28	480	480B
1	AN4-14	. Bolt	1	X	X	X
2	AN960-416L	. Washer	2	X	X	X
3	1/4 Harper	. Washer, Flat	2	X	X	X
4	28-16219-1	. Spacer	1	X	X	X
5	MS17826-4	. Nut	1	X	X	X
6	AN381-2-8	. Cotter Pin	3	X	X	X
7	NAS 6203-17H	. Bolt	2	X	X	X
8	AN960-10L	. Washer	4	X	X	X
9	MS21042-3	. Nut	2	X	X	X
10	28-16129-2	. Bolt	3	X	X	X
11	28-16124-1	. Spacer	3	X	X	X
12	AN960-416L	. Washer	3	X	X	X
13	AN320-4	. Nut	3	X	X	X
14	AN960D10L	. Washer	6	X	X	X
15	MS20074-03-04	. Bolt	6	X	X	X
15	AN503-10-10	. Screw (Alternate)	6	X	X	X

UNCONTROLLED COPY WHEN DOWNLOADED OR PRINTED

Visit www.enstromhelicopter.com for instructions to order an original manual and to register for email notification of updates.

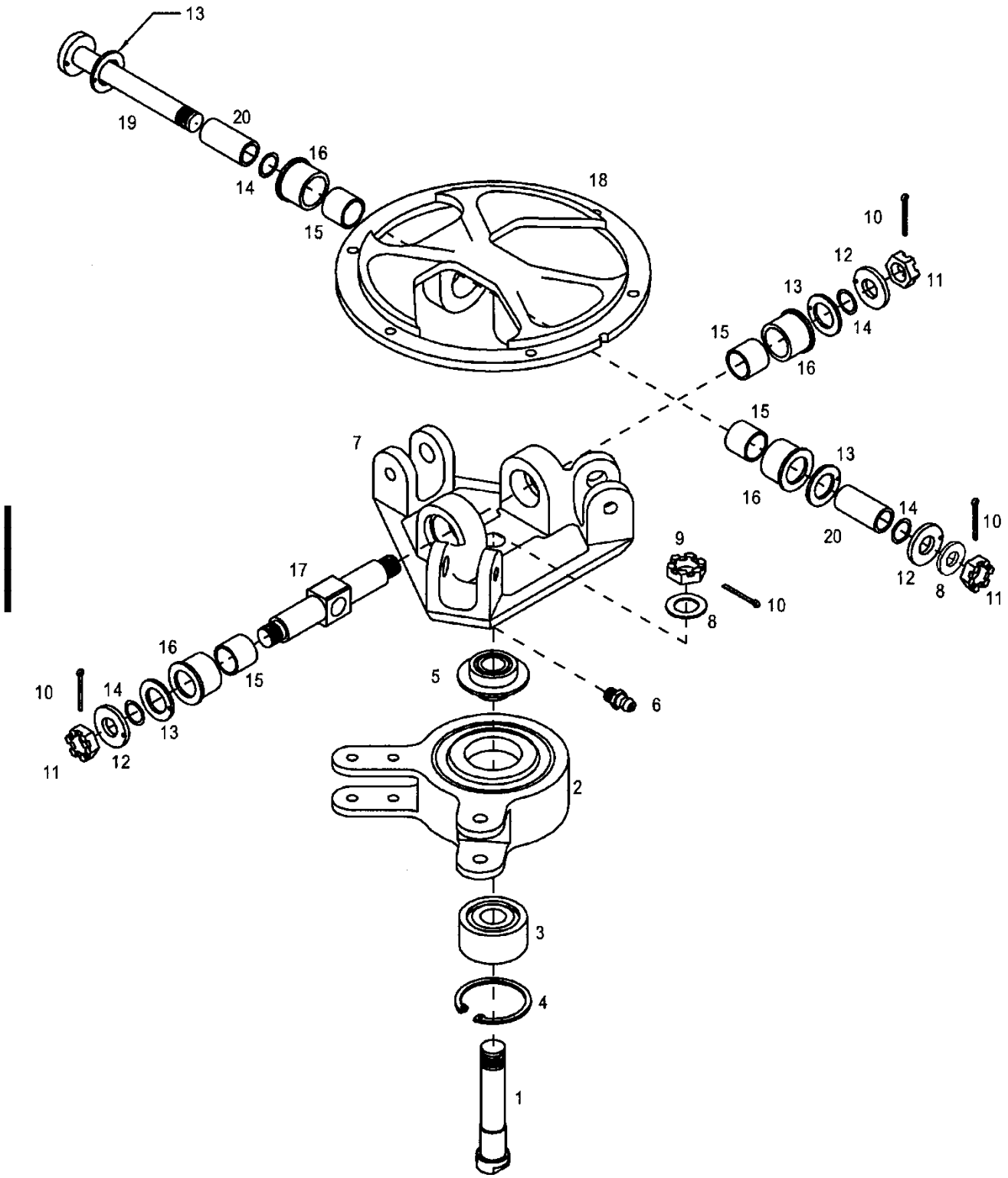

FIGURE 9-11. LOWER SWASHPLATE ASSEMBLY

UNCONTROLLED COPY WHEN DOWNLOADED OR PRINTED

Visit www.enstromhelicopter.com for instructions to order an original manual and to register for email notification of updates.

FIGURE 9-11. LOWER SWASHPLATE ASSEMBLY

ITEM NUMBER	PART NUMBER	DESCRIPTION	QTY PER ASSY	EFFECTIVITY		
				TH-28	480	480B
–	4140520-5	Lower Swashplate Assembly	REF	X	X	X
1	4140531-13	. Bolt	1	X	X	X
2**	4140526-7	. Uni-Ball Assembly	1	X	X	X
–	4140525-11	. . Housing	1	X	X	X
–	VTB11350	. . Bearing Assembly (Uni)	1	X	X	X
2	4140526-3	. Uni-Ball Assembly (Superseded by 4140526-7)	1	X	X	X
3	ECD009-11	. Bearing Angular Contact	1	X	X	X
4	N5002-125-PP	. Retaining Ring	1	X	X	X
5	4140534-11	. Spacer	1	X	X	X
6	1641-B	. Fitting, Grease	1	X	X	X
7*	28-16119-5	. Lower Universal Housing (Preferred Part)	1	X	X	X
7*	4140535-13	. Lower Universal Housing (Alternate)	1	X	X	X
8●	NAS1149F0732P	. Washer	2	X	X	X
8	AN960-716L	. Washer (Superseded by NA1149F0732P)	1	X	X	X
9	AN320-7	. Nut	1	X	X	X
10●●	MS24665-153	. Cotter Pin	4	X	X	X
10	AN381-2-12	. Cotter Pin (Superseded by MS24665-153)	4	X	X	X
11	AN320-6	. Nut	3	X	X	X
12	28-16227-3	. Washer Assembly	3	X	X	X
13	28-16263-5	. DU Bushing	4	X	X	X
14	28-16524-3	. Shim, .020"	A/R	X	X	X
14	28-16524-4	. Shim, .015"	A/R	X	X	X
14	28-16524-5	. Shim, .005"	A/R	X	X	X
14	28-16524-6	. Shim, .003"	A/R	X	X	X
14	28-16524-7	. Shim, .002"	A/R	X	X	X
14	28-16524-8	. Shim, .001"	A/R	X	X	X
15	08DU08	. Bearing	4	X	X	X
16	28-16226-5	. Sleeve	4	X	X	X
17	28-16223-19	. Universal Shaft	1	X	X	X
18●	28-16116-11	. Upper Universal Housing	1	X	X	X
18	28-16116-1	. Upper Universal Housing (Superseded by 28-16116-11)	1	X	X	X
19	28-16224-5	. Tie Rod Assembly	1	X	X	X
20	28-16225-19	. Spacer	2	X	X	X

* Effectivity S/N 5132 and subsequent.

** Effectivity 480B S/N 5158 and subsequent. Retrofittable to 480 S/N 5001, 480B S/N 5042 and subsequent.

UNCONTROLLED COPY WHEN DOWNLOADED OR PRINTED

Visit www.enstromhelicopter.com for instructions to order an original manual and to register for email notification of updates.

- ● Effectivity 480B S/N 5160 and subsequent. Retrofittable to 480 S/N 5001 to 5041 and 480B S/N 5042 and subsequent.
- ▌●● Effectivity 480B S/N 5161 and subsequent. Retrofittable to 480 S/N 5001 to 5041 and 480B S/N 5042 and subsequent.

UNCONTROLLED COPY WHEN DOWNLOADED OR PRINTED

Visit www.enstromhelicopter.com for instructions to order an original manual and to register for email notification of updates.

INTENTIONALLY LEFT BLANK

UNCONTROLLED COPY WHEN DOWNLOADED OR PRINTED

Visit www.enstromhelicopter.com for instructions to order an original manual and to register for email notification of updates.

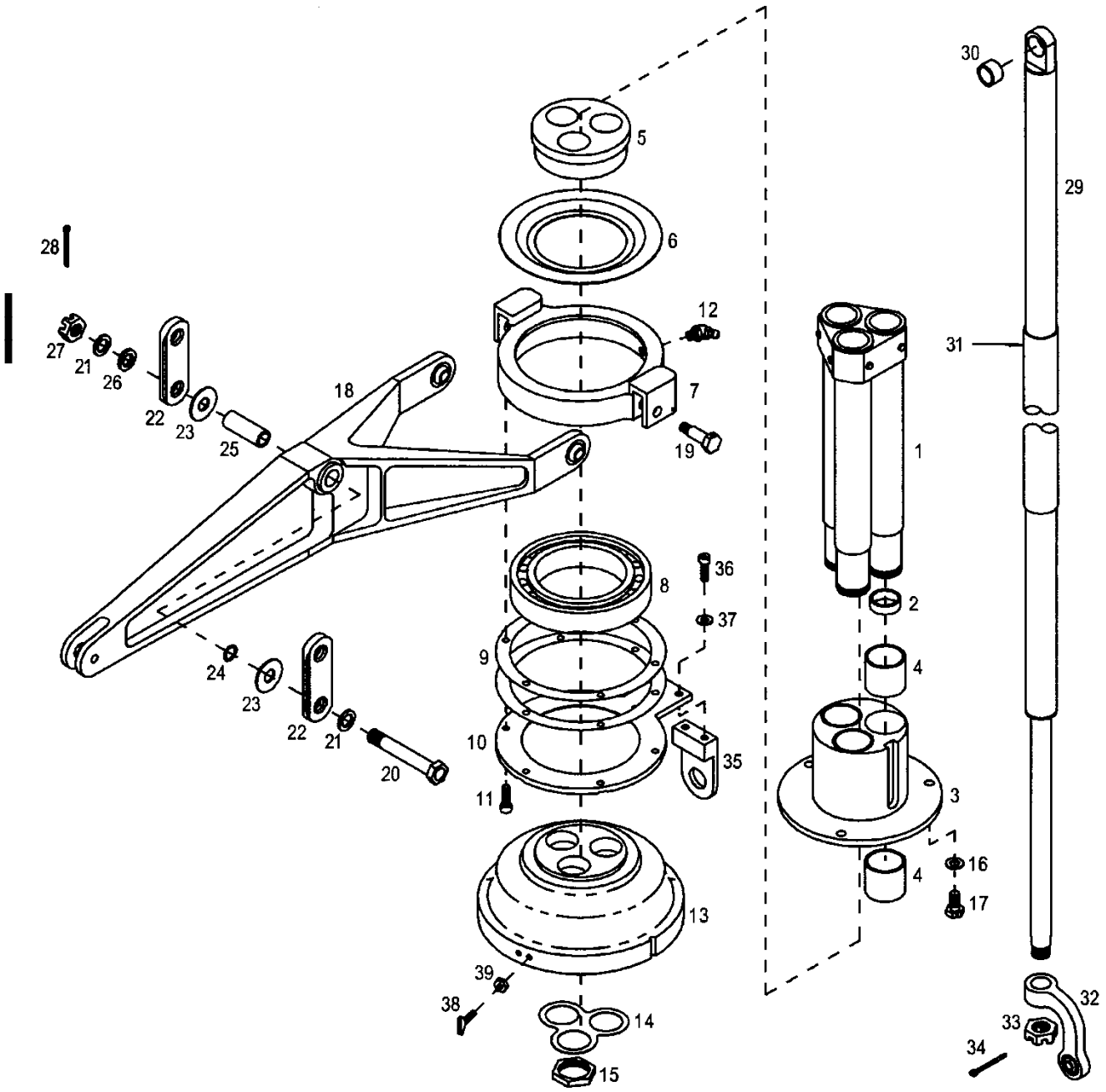

FIGURE 9-12. UPPER SWASHPLATE ASSEMBLY AND CONTROLS

UNCONTROLLED COPY WHEN DOWNLOADED OR PRINTED

Visit www.enstromhelicopter.com for instructions to order an original manual and to register for email notification of updates.

FIGURE 9-12. UPPER SWASHPLATE ASSEMBLY AND CONTROLS

ITEM NUMBER	PART NUMBER	DESCRIPTION	QTY PER ASSY	EFFECTIVITY		
				TH-28	480	480B
–	4140500-909	. Upper Swashplate Assembly	1	X	X	X
1	28-16260-1	. . Retainer & Guide Shaft Assembly	1	X	X	X
2	28-16264-1	. . . Bushing	3	X	X	X
3	4140530-1	. . Main Rotor Control System	1	X	X	X
4	16DU16	. . . Bushing	6	X	X	X
–	4140500-911	. . Bearing Housing Assembly	1	X	X	X
5	28-16106-2	. . . Spacer	1	X	X	X
6	28-16386-1	. . . Slinger	1	X	X	X
7	28-16108-2	. . . Bearing Housing	1	X	X	X
7*	28-16108-11	. . . Bearing Housing	1	X	X	X
8	ECD013-11	. . . Bearing	1	X	X	X
9	28-16125-3	. . . Shim, .005”	A/R	X	X	X
9	28-16125-4	. . . Shim, .003”	A/R	X	X	X
9	28-16125-5	. . . Shim, .002”	A/R	X	X	X
10*	28-16043-19	. . . Bearing Retainer	1	X	X	X
10°°	28-16043-11	. . . Bearing Retainer	1		X	
11	AN503-10-10	. . . Screw	6	X	X	X
12	1637-B	. . . Fitting, Grease	1	X	X	X
13*	28-16112-17	. . Housing	1	X	X	X
13*	28-16112-15	. . Housing (Superseded by 28-16112-17 and used with 28-16043-19)	1	X	X	X
13	28-16112-13	. . Housing (Superseded by 28-16112-17 and used with 28-16043-11)	1	X	X	
14	28-16126-1	. . Lock Plate	1	X	X	X
15	28-16113-1	. . Nut	3	X	X	X
16	AN960-416L	. Washer	3	X	X	X
17	AN4H-4A	. Bolt	3	X	X	X
–	MS20995C25	. Safety Wire	A/R	X	X	X
18	4167316-5	. Collective Walking Beam Assembly	1	X	X	X
18**	4167316-3	. Collective Walking Beam Assembly	1	X	X	
–	LHSSE-5	. . Bearing	2	X	X	X
–	4167333-11	. . Bushing	2	X	X	X
19	28-16109-1	. Bolt	2	X	X	X
19°	28-16109-11	. Bolt	2	X	X	X
20	NAS6206-32	. Bolt	2	X	X	X
21	AN960-616L	. Washer	4	X	X	X
22	4167317-13	. Link	2	X	X	X
23	3/8 Harper	. Washer, Flat	4	X	X	X

UNCONTROLLED COPY WHEN DOWNLOADED OR PRINTED

Visit www.enstromhelicopter.com for instructions to order an original manual and to register for email notification of updates.

FIGURE 9-12. UPPER SWASHPLATE ASSEMBLY AND CONTROLS

ITEM NUMBER	PART NUMBER	DESCRIPTION	QTY PER ASSY	EFFECTIVITY		
				TH-28	480	480B
24	28-16524-3	. Shim, .020"	A/R	X	X	X
24	28-16524-4	. Shim, .015"	A/R	X	X	X
24	28-16524-5	. Shim, .005"	A/R	X	X	X
24	28-16524-6	. Shim, .003"	A/R	X	X	X
24	28-16524-7	. Shim, .002"	A/R	X	X	X
24	28-16524-8	. Shim, .001"	A/R	X	X	X
25	4167318-11	. Spacer	2	X	X	X
26	AN960-616	. Washer	2	X	X	X
27	AN320-6	. Nut	2	X	X	X
28	AN381-3-12	. Cotter Pin	2	X	X	X
29	4140532-5	. Control Rod Assembly	3	X	X	X
29‡	4140532-3	. Control Rod Assembly (Alternate)	3	X	X	X
29‡	4140532-1	. Control Rod Assembly (Alternate)	3	X	X	X
30	M81934/1-08C012	. . Bearing	3		X	X
30 ≡	MS21240-08C12	. . Bearing (Superseded by M81934/1-08C012)	3	X	X	X
31●	28-16253-8	. . Shrink Tube – Control Rod	3	X	X	X
31	28-16253-6	. . Rod Sleeve (Superseded by 28-16253-8)	3	X	X	X
32††	28-16143-3	. Rod End Assembly	3		X	X
32	28-16143-1	. Dog Leg Rod End (Superseded by 28-16143-3)	3	X	X	X
–††	ECD030-11	. . Bearing	1		X	X
–	MS14103-4	. . Bearing (Superseded by ECD030-11)	1	X	X	X
33	AN320-8	. Nut	3	X	X	X
34	AN381-3-16	. Cotter Pin	3	X	X	X
35†	28-16043-13	. Bracket	1	X	X	X
36†	AN3H4A	. Bolt	2	X	X	X
36†	AN502-10-10	. Screw (Alternate)	2	X	X	X
37†♦	NAS1149F0332P	. Washer	2		X	X
37†	AN960-10L	. Washer (Superseded by NAS1149F0332P)	2	X	X	X
38†	28-16043-15	. Interrupter	A/R	X	X	X
39†♦	MS35649-282	. Nut	A/R		X	X
39†	AN340-832	. Nut (Superseded by MS35649-282)	A/R	X	X	X
40	28-16109-13	. Bushing (Used with 28-16108-11)	2	X	X	X

* Required when equipped with Main Rotor Transmission, P/N 4130030-1 or 4130060-1 or 480 S/N 5042 and subsequent.

** Used on TH-28, S/N 3004 thru 3006; 480, S/N 5001 thru 5012 and 5015.

† Optional equipment for Tracking Main Rotor System.

‡ Refer to Service Directive Bulletin T-019.

UNCONTROLLED COPY WHEN DOWNLOADED OR PRINTED

Visit www.enstromhelicopter.com for instructions to order an original manual and to register for email notification of updates.

°	Replaces the 28-16109-1 bolt in production. 28-16109-11 may be used with bearing housing 28-16108-2 for service.
°°	Effectivity 480 S/N 5041 and prior.
≡	See Appendix A for equivalent part information.
●	Effectivity 480B S/N 5161 and subsequent. Retrofittable to 480 S/N 5001 to 5041 and 480B S/N 5042 and subsequent.
▌ ††	Effectivity 480B S/N 5207 and subsequent. Retrofittable to 480 S/N 5001 – 5041 and 480B S/N 5042 and subsequent.
▌ ♦	Effectivity 480B S/N 5210 and subsequent. Retrofittable to 480 S/N 5001 – 5041 and 480B S/N 5042 and subsequent.

UNCONTROLLED COPY WHEN DOWNLOADED OR PRINTED

Visit www.enstromhelicopter.com for instructions to order an original manual and to register for email notification of updates.

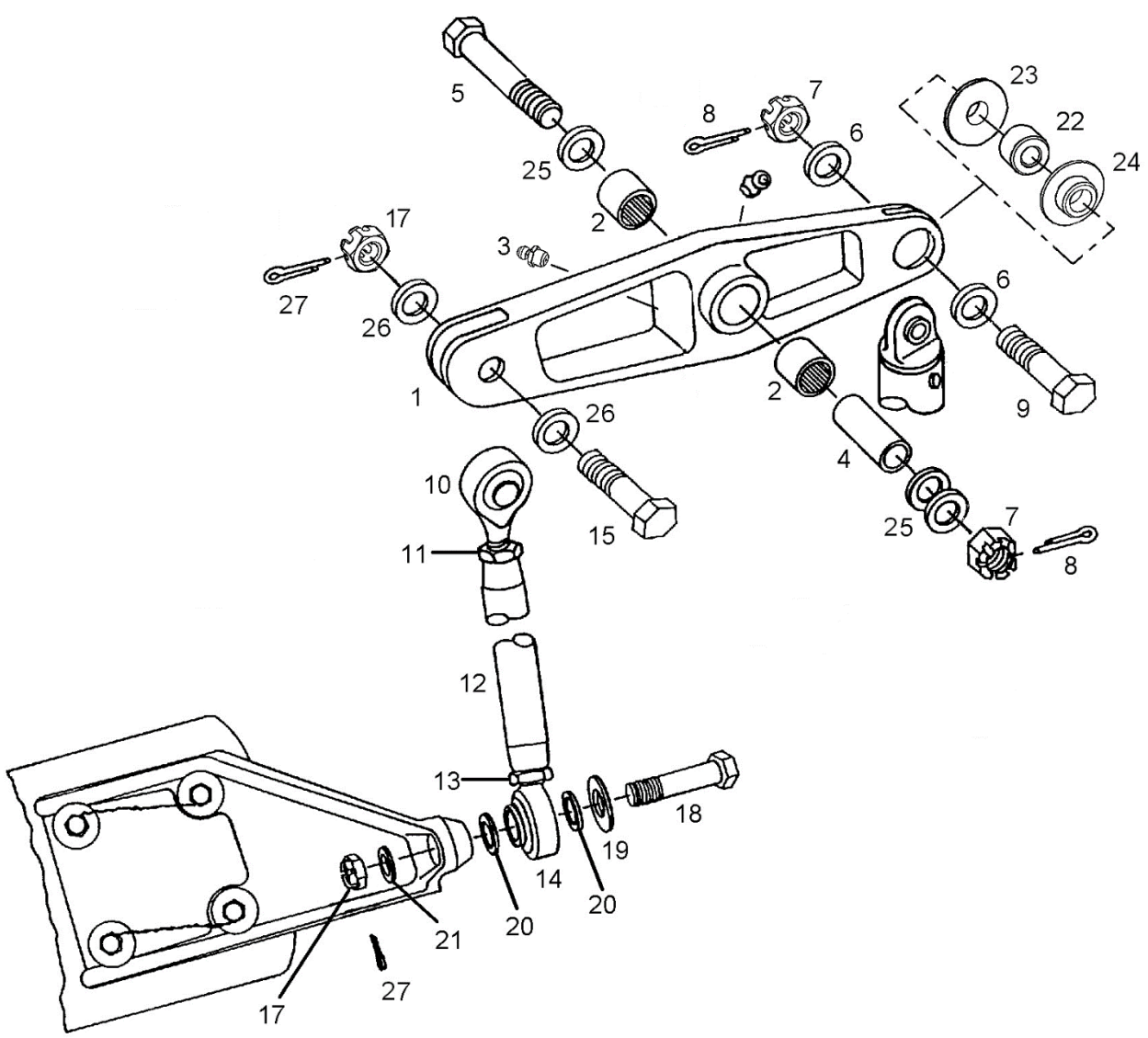

FIGURE 9-13. MAIN ROTOR PITCH CHANGE CONTROLS

UNCONTROLLED COPY WHEN DOWNLOADED OR PRINTED

Visit www.enstromhelicopter.com for instructions to order an original manual and to register for email notification of updates.

FIGURE 9-13. MAIN ROTOR PITCH CHANGE CONTROLS

ITEM NUMBER	PART NUMBER	DESCRIPTION	QTY PER ASSY	EFFECTIVITY		
				TH-28	480	480B
–	4140500-7	Main Rotor Rotating Controls Installation	REF		X	X
1	28-14207-101	. Pitch Change Bellcrank	3	X	X	X
1	28-14207-9	. Pitch Change Bellcrank (Obsolete)	3	X	X	
2	GB-910	. . Bearing	2	X	X	X
3	1641-B	. . Fitting, Grease	1	X	X	X
4	28-14262-1	. Race, Bearing, Bellcrank	3	X	X	X
5	AN174-21	. Bolt	3	X	X	X
6	NAS1149F0432P	. Washer	6	X	X	X
6	AN960-416	. Washer (Superseded by NAS1149F0432P)	6	X	X	X
7	MS17825-4	. Nut, Hex Castellated	6	X	X	X
7	F12-NE-4753-048	. Nut (Superseded by MS17825-4)	6	X	X	X
8	MS24665-1013	. Cotter Pin	6	X	X	X
8	AN381-2-8	. Cotter Pin (Superseded by MS24665-1013)	6	X	X	X
9	AN4-11	. Bolt	3	X	X	X
10	01-691-05	. Rod End	3	X	X	X
11	AN316-5R	. Nut	3	X	X	X
12	28-16206-11	. Barrel	3	X	X	X
13	AN316-5L	. Nut	3	X	X	X
14	11-691-05	. Rod End	3	X	X	X
15	AN5-11	. Bolt	3	X	X	X
16	(Deleted)					
17	MS17825-5	. Nut, Hex Castellated	6	X	X	X
17	F12-NE-4753-054	. Nut (Superseded by MS17825-5)	6	X	X	X
18	AN5-16	. Bolt	3	X	X	X
19*	ECD050-19	. Washer, Stainless Steel	3	X	X	X
19	5/16 Harper	. Washer, Flat (Superseded by ECD050-19)	3	X	X	X
20	28-14259-3	. Washer, Rod End Bearing	6	X	X	X
21	NAS1149F0563	. Washer, Flat	3	X	X	X
22	28-16336-11	. Bushing	3	X	X	X
23	28-14250-1	. Bushing (Included in Item 1)	3	X	X	X
24	28-14250-3	. Bushing (Included in Item 1)	3	X	X	X
25Δ	NAS1149F0463P	. Washer	3	X	X	X
26Δ	NAS1149F0532P	. Washer	3	X	X	X
27	MS24665-151	. Cotter Pin	6	X	X	X

Δ Up to three washers total under bolt head and nut may be used to ensure proper engagement of cotter pin in nut castellation.

UNCONTROLLED COPY WHEN DOWNLOADED OR PRINTED

Visit www.enstromhelicopter.com for instructions to order an original manual and to register for email notification of updates.

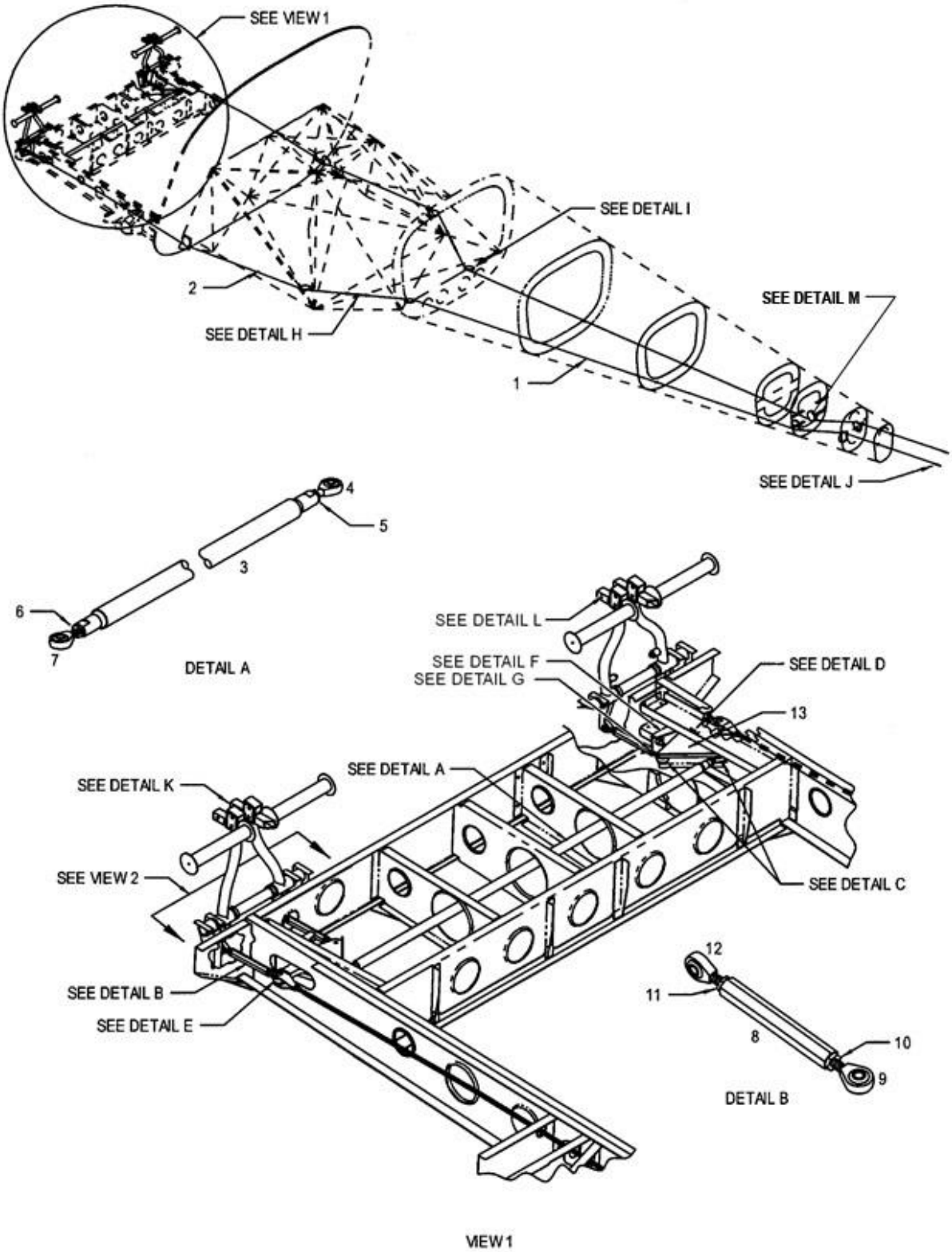

Sheet 1 of 5

FIGURE 9-14. TAIL ROTOR CONTROL SYSTEM (DUAL CONTROL)

UNCONTROLLED COPY WHEN DOWNLOADED OR PRINTED

Visit www.enstromhelicopter.com for instructions to order an original manual and to register for email notification of updates.

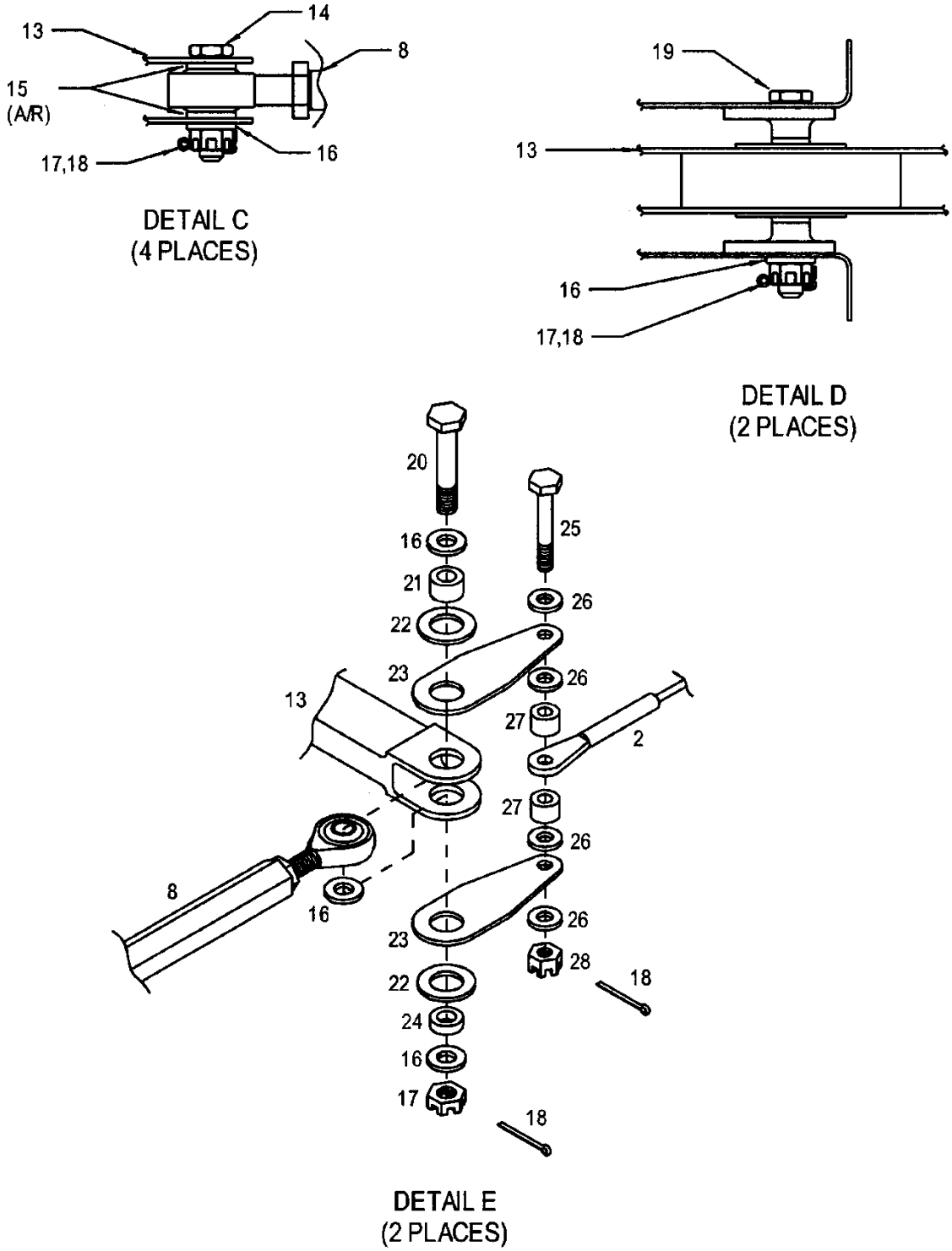

Sheet 2 of 5

FIGURE 9-14. TAIL ROTOR CONTROL SYSTEM (DUAL CONTROL)

UNCONTROLLED COPY WHEN DOWNLOADED OR PRINTED

Visit www.enstromhelicopter.com for instructions to order an original manual and to register for email notification of updates.

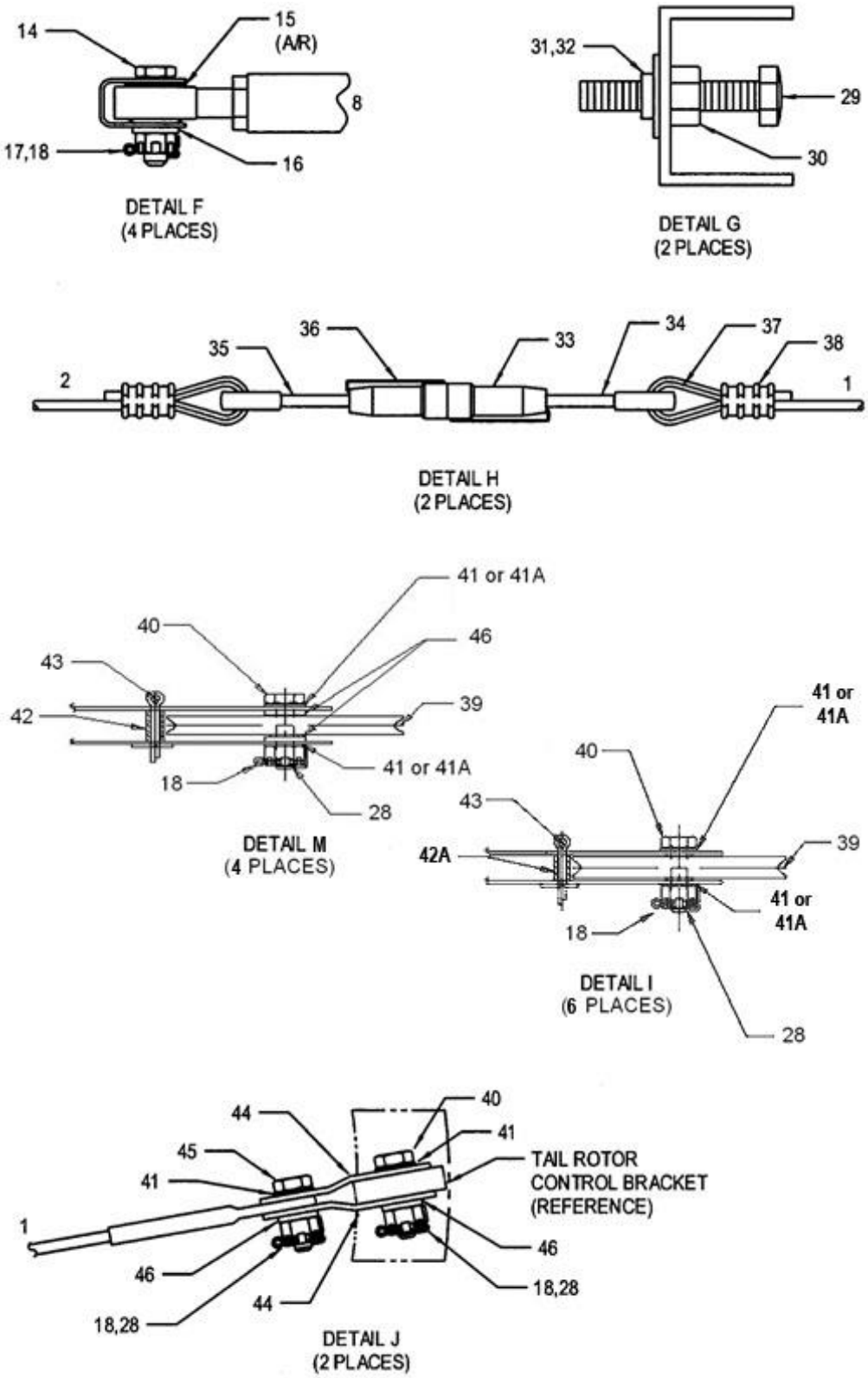

Sheet 3 of 5

FIGURE 9-14. TAIL ROTOR CONTROL SYSTEM (DUAL CONTROL)

UNCONTROLLED COPY WHEN DOWNLOADED OR PRINTED

Visit www.enstromhelicopter.com for instructions to order an original manual and to register for email notification of updates.

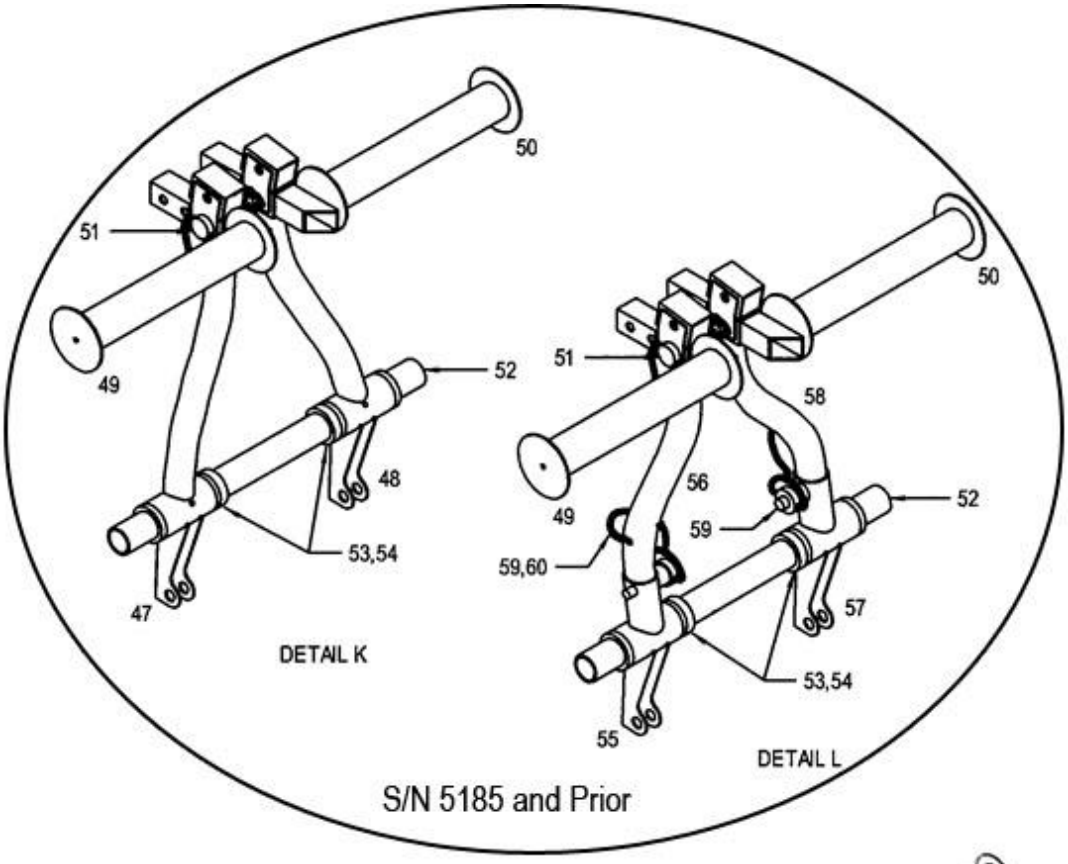

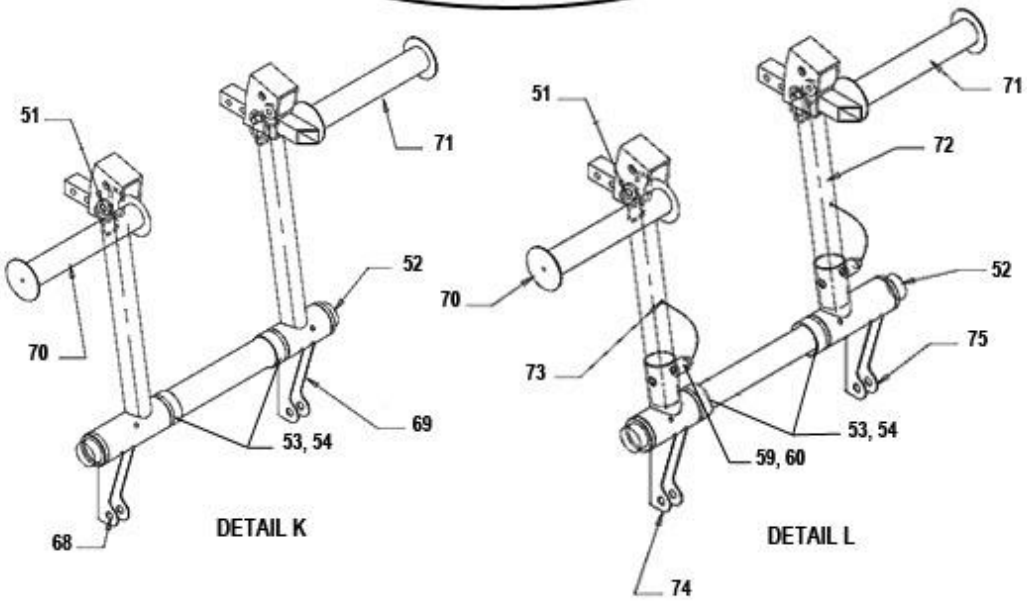

Sheet 4 of 5

FIGURE 9-14. TAIL ROTOR CONTROL SYSTEM (DUAL CONTROL)

UNCONTROLLED COPY WHEN DOWNLOADED OR PRINTED

Visit www.enstromhelicopter.com for instructions to order an original manual and to register for email notification of updates.

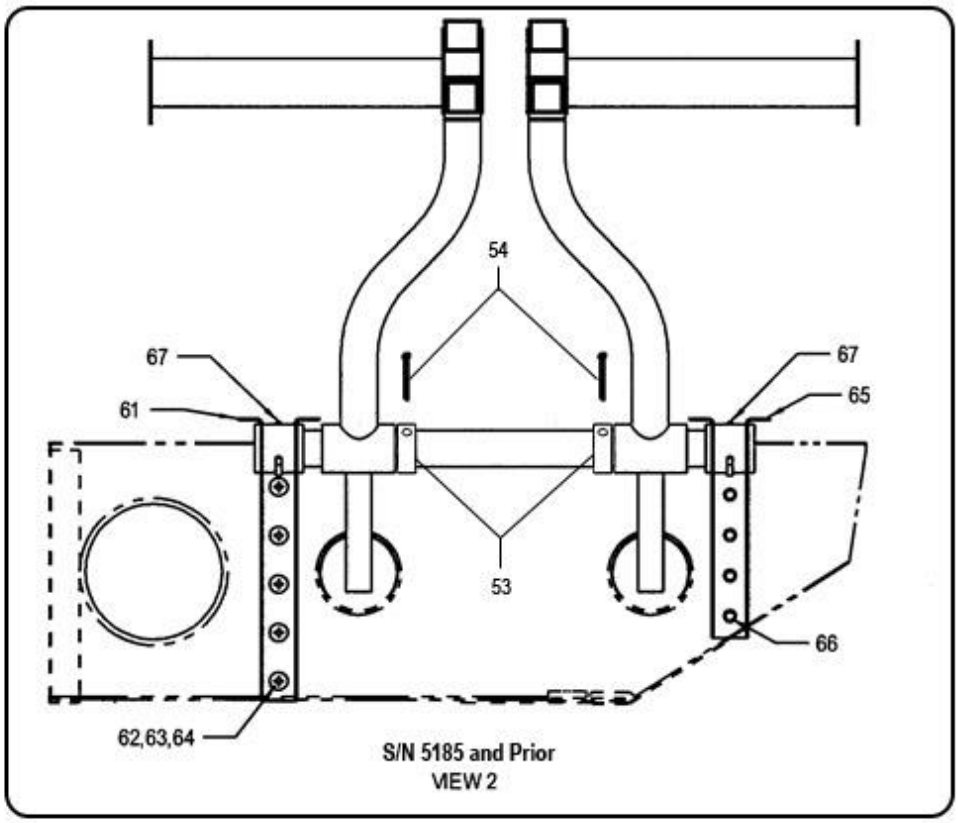

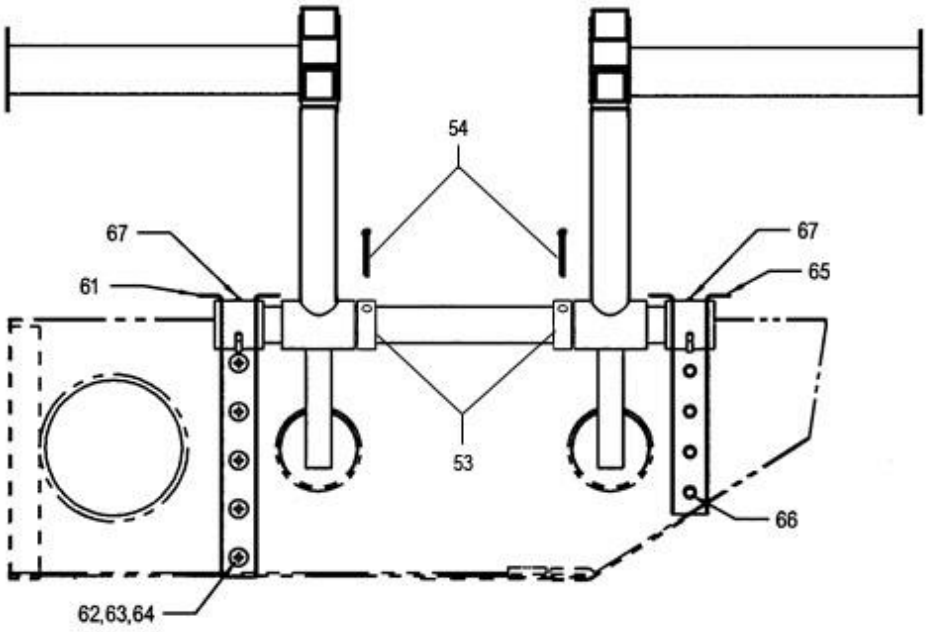

VIEW 2

Sheet 5 of 5

FIGURE 9-14. TAIL ROTOR CONTROL SYSTEM (DUAL CONTROL)

UNCONTROLLED COPY WHEN DOWNLOADED OR PRINTED

Visit www.enstromhelicopter.com for instructions to order an original manual and to register for email notification of updates.

FIGURE 9-14. TAIL ROTOR CONTROL SYSTEM (DUAL CONTROL)

ITEM NUMBER	PART NUMBER	DESCRIPTION	QTY PER ASSY	EFFECTIVITY		
				TH-28	480	480B
–	4168001-9	Tail Rotor System Installation	REF		X	X
–	4168001-7	Tail Rotor System Installation (Superseded by 4168001-9)	REF		X	X
–	4168001-5	Tail Rotor System Installation (Single Control)	REF		X	X
–‡	4168001-1	Tail Rotor System Installation	REF		X	X
1	4150008-1	. Cable Assembly	2	X	X	X
2	4150008-5	. Cable Assembly	2	X	X	X
3	4166050-207	. Control Rod Assembly	1	X	X	X
–	4166036-47	. . Tube	1	X	X	X
4	HMVV4M	. . Bearing, Rod End	1	X	X	X
5	AN316-4R	. . Nut	1	X	X	X
6	AN316-4L	. . Nut	1	X	X	X
7	HMLVV4M	. . Bearing, Rod End	1	X	X	X
8	4166037-1	. Push/Pull Rod Assembly	4	X	X	X
–	4166038-11	. . Link	1	X	X	X
9	HMVV4M	. . Bearing, Rod End	1	X	X	X
10	AN316-4R	. . Nut	1	X	X	X
11	AN316-4L	. . Nut	1	X	X	X
12	HMLVV4M	. . Bearing, Rod End	1	X	X	X
13	4132008-5	. Bellcrank Assembly	2	X	X	X
14	NAS6204-9D	. Bolt	4	X	X	X
15	AN960D416	. Washer	A/R	X	X	X
15	AN960D416L	. Washer	A/R	X	X	X
16	AN960D416	. Washer	16	X	X	X
17	MS17826-4	. Nut	12	X	X	X
18	AN381-2-7	. Cotter Pin	26	X	X	X
19	NAS6204-26D	. Bolt	2	X	X	X
20	NAS6204-16D	. Bolt	2	X	X	X
21	4132014-19	. Bushing	2	X	X	X
22	4132014-15	. Spacer	4	X	X	X
23	4132014-23	. Control Link	4	X	X	X
24	NAS73-4E002	. Spacer	2	X	X	X
25	AN3-12	. Bolt	2	X	X	X
26	AN960-10L	. Washer	8	X	X	X
27	NAS73-4E004	. Bushing	4	X	X	X
28	F12NE-4753-02	. Nut	16	X	X	X
29	NAS428K4-10	. Bolt	2	X	X	X

UNCONTROLLED COPY WHEN DOWNLOADED OR PRINTED

Visit www.enstromhelicopter.com for instructions to order an original manual and to register for email notification of updates.

FIGURE 9-14. TAIL ROTOR CONTROL SYSTEM (DUAL CONTROL)

ITEM NUMBER	PART NUMBER	DESCRIPTION	QTY PER ASSY	EFFECTIVITY		
				TH-28	480	480B
30	AN315-4R	. Nut	2	X	X	X
31	MS21075L4	. Nut Plate	2	X	X	X
32	MS20426AD3-5	. Rivet	4	X	X	X
33	MS21251-B3S	. Barrel	2	X	X	X
33	MS21251-B3L	. Barrel (Alternate)	2	X	X	X
34	MS21255-3RS	. Eye	2	X	X	X
35	MS21255-3LS	. Eye	2	X	X	X
36	MS21256-1	. Clip	4	X	X	X
36	MS21256-2	. Clip (Alternate, Use With MS21251-B3L)	4	X	X	X
37	AN100C4	. Thimble	4	X	X	X
38 ≡	428-3-VG	. Nicopress Sleeve	4	X	X	X
39*	MS24566-2B	. Pulley	10	X	X	X
40	AN3-6	. Bolt	12	X	X	X
41	AN960-10L	. Washer	24	X	X	X
41A	AN960-10	. Washer	A/R	X	X	X
42A	4168002-13	. Spacer	6	X	X	X
42	4168002-11	. Spacer	4	X	X	X
42	4168000-11	. Spacer (Superseded by 4168002-11)	4	X	X	X
43	AN381-3-12	. Cotter Pin	10	X	X	X
44	28-16352-1	. Link	4	X	X	X
45	AN3-5	. Bolt	2	X	X	X
46	AN960-10	. Washer	8	X	X	X
47	4150006-3	. Pedal Leg Assembly	1	X	X	X
–	28-16332-1	. . Bushing	2	X	X	X
48	4150006-6	. Pedal Leg Assembly	1	X	X	X
–	28-16332-1	. . Bushing	2	X	X	X
49	4150004-1	. Foot Support	2	X	X	X
50	4150004-2	. Foot Support	2	X	X	X
51♦	4150017-11	. Pin	4	X	X	X
52♦	4150003-15	. Shaft	2	X	X	X
53♦	28-16341-1	. Spacer	4	X	X	X
54♦	MS24665-323	. Cotter Pin	4	X	X	X
55	4150013-3	. Stub Assembly	1	X	X	X
–	28-16332-1	. . Bushing	2	X	X	X
56	4150011-3	. Pedal Leg Assembly	1	X	X	X
57	4150013-4	. Stub Assembly	1	X	X	X
–	28-16332-1	. . Bushing	2	X	X	X
58	4150011-4	. Pedal Leg Assembly	1	X	X	X

UNCONTROLLED COPY WHEN DOWNLOADED OR PRINTED

Visit www.enstromhelicopter.com for instructions to order an original manual and to register for email notification of updates.

FIGURE 9-14. TAIL ROTOR CONTROL SYSTEM (DUAL CONTROL)

ITEM NUMBER	PART NUMBER	DESCRIPTION	QTY PER ASSY	EFFECTIVITY		
				TH-28	480	480B
59●	MS17987C409	. Pin	2	X	X	X
60●	90312A11	. Lanyard	2	X	X	X
61♦	4118798-5	. Mounting Bracket	2	X	X	X
62♦	MS21044N08	. Nut	10	X	X	X
62	AN365-832A	. Nut (Superseded by MS21044N08)	10	X	X	X
62	AN365-832	. Nut (Superseded by AN365-832A)	10	X	X	X
63♦	AN526-832R7	. Screw	10	X	X	X
63	AN526-832R8	. Screw (Superseded by AN526-832R7)	10	X	X	X
63	AN526-8R8	. Screw (Superseded by AN526-832R8)	10	X	X	X
64♦	AN960-8L	. Washer	10	X	X	X
65♦	4118798-7	. Mounting Bracket	2	X	X	X
66♦	MS20470AD5-4	. Rivet	8	X	X	X
67♦	MS24665-389	. Cotter Pin	4	X	X	X
67	MS24665-357	. Cotter Pin (Superseded by MS24665-389)	4	X	X	X
–	4119804-21	. T/R Pedal Scuff Plate, Pilot, Left	1	X	X	X
–	4119804-22	. T/R Pedal Scuff Plate, Co-Pilot, Right	1	X	X	X
–	4119804-23	. T/R Pedal Scuff Plate, Co-Pilot, Left	1	X	X	X
–	4119804-24	. T/R Pedal Scuff Plate, Pilot, Right	1	X	X	X
–**	4119855-11	. Pedal Cover	1	X	X	X
68†	4150018-101	. Pedal Leg Assembly	1		X	X
–	28-16332-1	. . Bushing	2	X	X	X
68	4150018-1	. Pedal Leg Assembly (Superseded by 4150018-101)	1		X	X
69	4150018-8	. Pedal Leg Assembly	1		X	X
–	28-16332-1	. . Bushing	2	X	X	X
70♦	4150004-3	. ADJ Foot Support	2		X	X
71♦	4150004-4	. ADJ Foot Support	2		X	X
72	4150018-7	. Pedal Leg Assembly	2		X	X
73●	CR3213-4-03	. Rivet	2		X	X
74●	4150018-9	. Pivot Weld Assembly	1		X	X
75●	4150018-6	. Pivot Weld Assembly	1		X	X

* Early production TH-28 and 480 aircraft have a pulley located approximately mid point on the outboard side of the keel beams. These aircraft have a total of twelve (12) pulleys.

** Install the cover when the co-pilot pedals are removed.

≡ See Appendix A for equivalent part information.

† Used with 4168001-9 Tail Rotor System Installation.

UNCONTROLLED COPY WHEN DOWNLOADED OR PRINTED

Visit www.enstromhelicopter.com for instructions to order an original manual and to register for email notification of updates.

‡ Effectivity 480B S/N 5185 and prior.

● Not installed with 4168001-5 installation.

♦ Quantities halved for 4168001-5 installation.

UNCONTROLLED COPY WHEN DOWNLOADED OR PRINTED

Visit www.enstromhelicopter.com for instructions to order an original manual and to register for email notification of updates.

INTENTIONALLY LEFT BLANK

UNCONTROLLED COPY WHEN DOWNLOADED OR PRINTED

Visit www.enstromhelicopter.com for instructions to order an original manual and to register for email notification of updates.

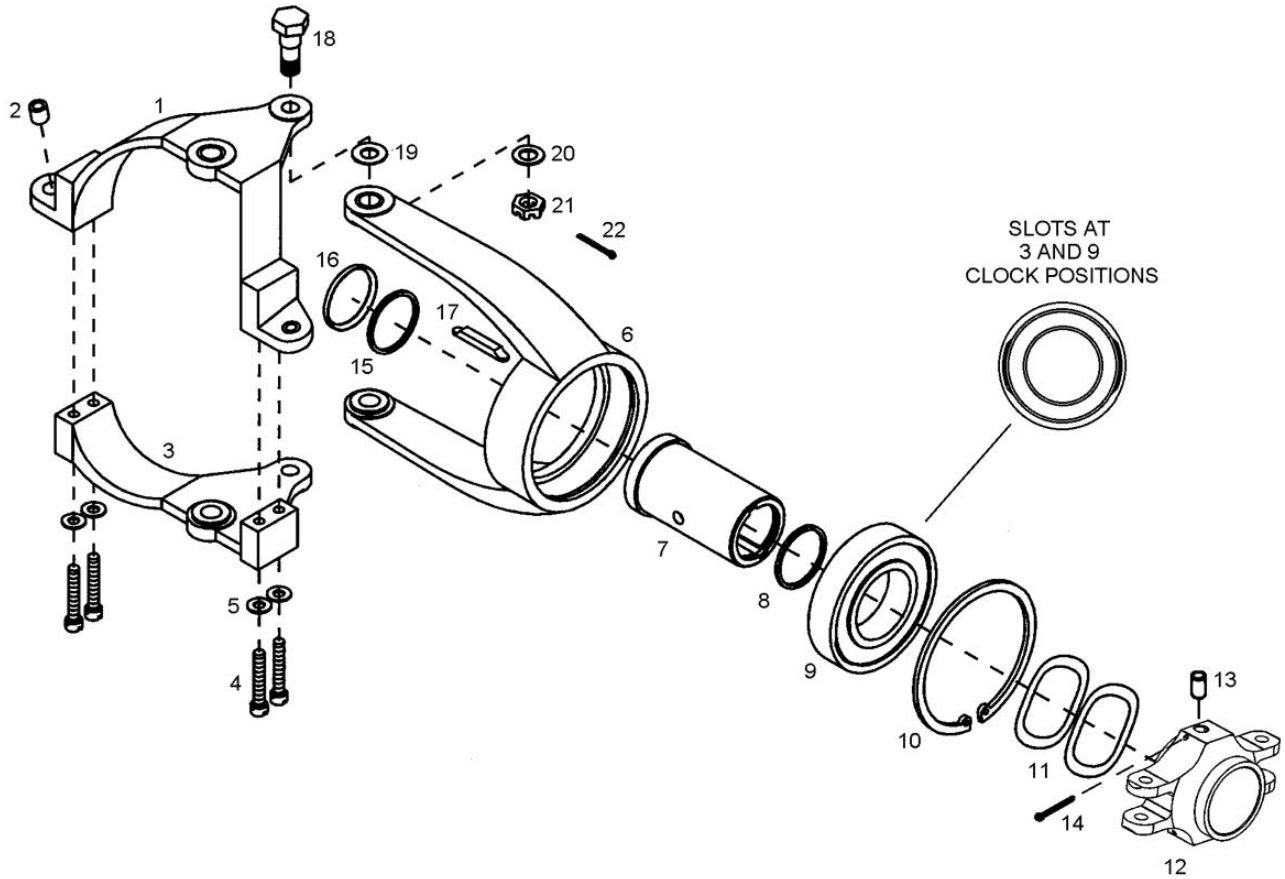

Sheet 1 of 2

FIGURE 9-15. TAIL ROTOR ROTATING CONTROLS

UNCONTROLLED COPY WHEN DOWNLOADED OR PRINTED

Visit www.enstromhelicopter.com for instructions to order an original manual and to register for email notification of updates.

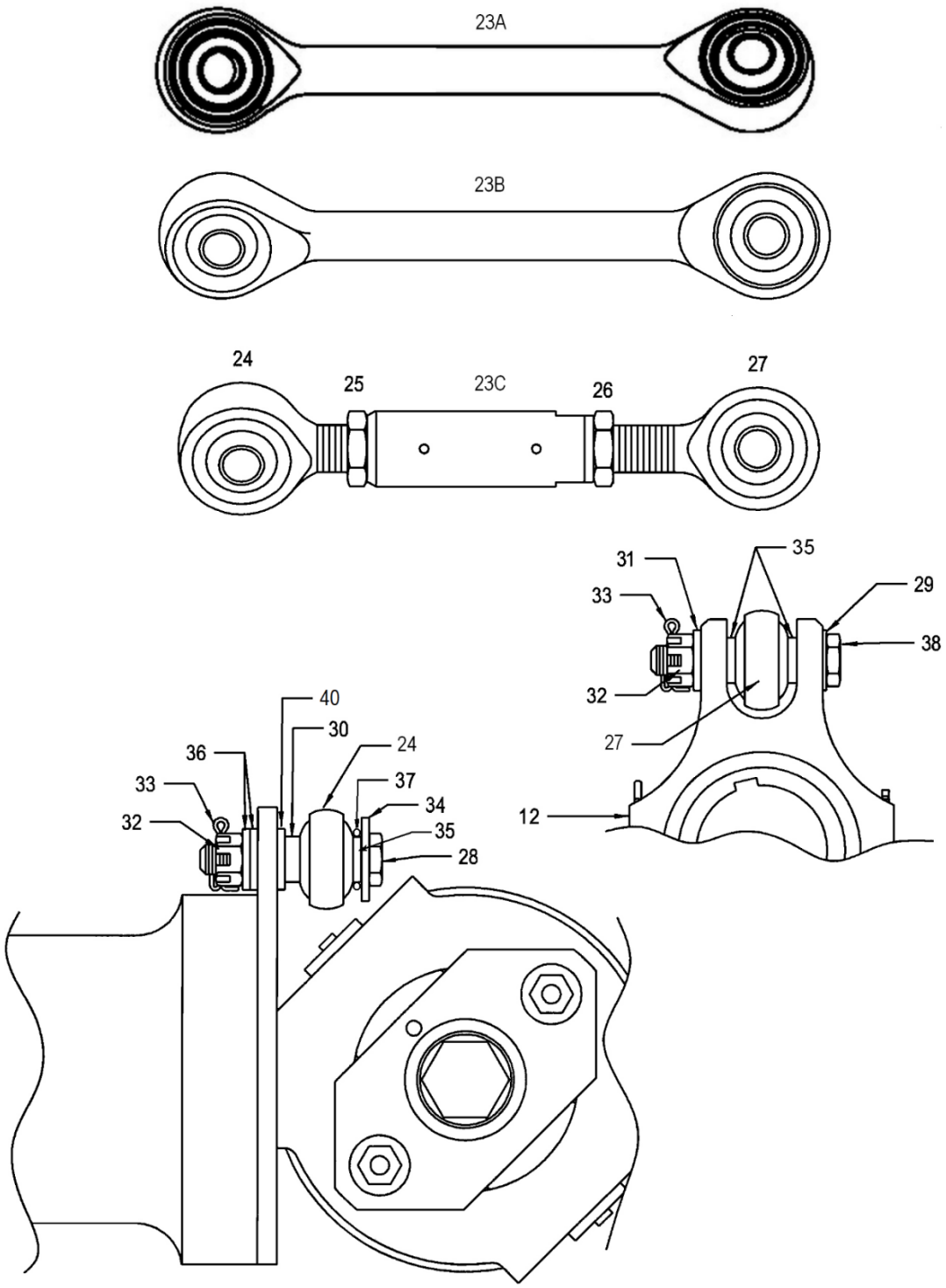

Sheet 2 of 2

FIGURE 9-15. TAIL ROTOR ROTATING CONTROLS

UNCONTROLLED COPY WHEN DOWNLOADED OR PRINTED

Visit www.enstromhelicopter.com for instructions to order an original manual and to register for email notification of updates.

FIGURE 9-15. TAIL ROTOR ROTATING CONTROLS

ITEM NUMBER	PART NUMBER	DESCRIPTION	QTY PER ASSY	EFFECTIVITY		
				TH-28	480	480B
–	4122000-9	Tail Rotating Controls Assembly/Installation	REF	X	X	X
1	28-16313-1	. Bracket	1	X	X	X
2	28-16319-1	. . Bushing	2	X	X	X
3	28-16314-1	. Bracket	1	X	X	X
4	AN503-10-18	. Screw	4	X	X	X
5	AN960-10L	. Washer	4	X	X	X
–	28-16396-2	. Bearing Housing and Pitch Link Retainer Assembly	1	X	X	X
6	28-16331-1	. . Bearing Housing	1	X	X	X
7	28-16394-11	. . Bearing	1	X	X	X
8	TS-023	. . Seal	1	X	X	X
9	ECD016-11	. . Bearing	1	X	X	X
10	N5002-268-PP	. . Retaining Ring	1	X	X	X
11	W-47	. . Washer	2	X	X	X
12	28-16392-13	. . Pitch Change Link Retainer	1	X	X	X
13	28-16397-11	. . Pin	2	X	X	X
14	AN381-2-16	. . Cotter Pin	2	X	X	X
15	TS-023	. Seal	1	X	X	X
16	28-16374-1	. Seal Retainer	1	X	X	X
17	28-16395-1	. Key	2	X	X	X
18	28-16310-2	. Bolt	2	X	X	X
19	28-16308-1	. Washer	2	X	X	X
20	AN960-516L	. Washer	2	X	X	X
21	F12NE4717-054	. Nut	2	X	X	X
22	MS24665-151	. Cotter Pin	2	X	X	X
22	AN381-2-10	. Cotter Pin (Superseded by MS24665-151)	2	X	X	X
23A‡	28-16391-5	. Tail Rotor Pitch Link Assembly	2		X	X
23A†	28-16391-3	. Tail Rotor Pitch Link Assembly (Superseded by 28-16391-5)	2	X	X	X
23B●	28-16391-1	. Tail Rotor Pitch Link Assembly (Superseded by 28-16391-3)	2	X	X	X
23C	28-16398-901	. Tail Rotor Pitch Link Assembly (Superseded by 28-16391-1)	2	X	X	X
–†	28-16345-11	. . Barrel Link Pitch	1	X	X	X
–	28-16345-1	. . Barrel Link Pitch (Superseded by 28-16345-11)	1	X	X	X
24	11-691-04	. . Bearing, Rod-End, 1/4" Male Left Hand	1	X	X	X
25	AN316-5L	. . Nut: Jam, 5/16-24 UNF-3B Left Hand	1	X	X	X

UNCONTROLLED COPY WHEN DOWNLOADED OR PRINTED

Visit www.enstromhelicopter.com for instructions to order an original manual and to register for email notification of updates.

FIGURE 9-15. TAIL ROTOR ROTATING CONTROLS

ITEM NUMBER	PART NUMBER	DESCRIPTION	QTY PER ASSY	EFFECTIVITY		
				TH-28	480	480B
26	AN316-5R	. . Nut: Jam (Used with 28-16391-901)	1	X	X	X
27	01-691-04	. . Rod-End (Used with 28-16391-901) (R/H Thread)	1	X	X	X
–	ECD030-11	. . Spherical Bearing	2	X	X	X
28	AN4-13	. Bolt	2	X	X	X
29	AN960-416L	. Washer	2	X	X	X
30	28-16353-3	. Spacer	2	X	X	X
31	AN960-416	. Washer	2	X	X	X
32	MS17825-4	. Nut	4	X	X	X
33	MS24665-1013	. Cotter Pin	4	X	X	X
34╪	ECD050-11	. Washer, Flat	2	X	X	X
35	28-16353-5	. . Spacer	6	X	X	X
36*	NAS1149C0463R	. Washer	A/R	X	X	X
36*	NAS1149C0432R	. Washer	A/R	X	X	X
36*╪	ECD050-11	. Washer, Flat	A/R	X	X	X
37	MS28775-111	. O-Ring	2	X	X	X
38**	AN4-13	. Bolt	2	X	X	X
38	AN4-14	. Bolt (Superseded by AN4-13)	2	X	X	X
39	28-16311-1	. Hat Bushing	4	X	X	X
40	NAS1149C0463R	. Washer	2	X	X	X

* Use as required for dynamically balancing the tail rotor. See also SIL T-027, latest revision.

** Effectivity S/N 5146 and subsequent. Retrofittable to 480 S/N 5042, 480B S/N 5001 and subsequent.

† Effectivity 480B S/N 5160 and subsequent. Retrofittable to 480 S/N 5001 – 5041, 480B S/N 5042 and subsequent.

● Effectivity 480B S/N 5061 and subsequent. Retrofittable to 480 S/N 5001 – 5041, 480B S/N 5042 and subsequent.

‡ Effectivity 480B S/N 5207 and subsequent. Retrofittable to 480 S/N 5001 – 5041, 480B S/N 5042 and subsequent.

╪ See Appendix B for hardware substitution information.

UNCONTROLLED COPY WHEN DOWNLOADED OR PRINTED

Visit www.enstromhelicopter.com for instructions to order an original manual and to register for email notification of updates.

INTENTIONALLY LEFT BLANK

UNCONTROLLED COPY WHEN DOWNLOADED OR PRINTED

Visit www.enstromhelicopter.com for instructions to order an original manual and to register for email notification of updates.

SECTION 10

ELECTRICAL/INSTRUMENT SYSTEMS

UNCONTROLLED COPY WHEN DOWNLOADED OR PRINTED

Visit www.enstromhelicopter.com for instructions to order an original manual and to register for email notification of updates.

INTENTIONALLY LEFT BLANK

UNCONTROLLED COPY WHEN DOWNLOADED OR PRINTED

Visit www.enstromhelicopter.com for instructions to order an original manual and to register for email notification of updates.

SECTION 10 – TABLE OF CONTENTS

	Cover	10-1
	Table of Contents	10-1.2
10-1	TH-28 Instrument Panel Equipment Installation	10-2
10-2	480 Standard Instrument Panel Equipment Installation	10-8
10-3	480 (Optional)/480B Instrument Panel Equipment Installation	10-16
10-4	480B Instrument Panel Equipment Installation	10-22
10-5	TH-28 Circuit Breaker Panel	10-30
10-6	480 Circuit Breaker Panel	10-32
10-7	480 Optional Circuit Breaker Panel	10-34
10-8	480B Circuit Breaker Panel	10-36
10-9	480B Circuit Breaker Panel	10-38
10-10	Pedestal Miscellaneous Equipment	10-44
10-11	Outside Air Temperature (OAT) Gauge Installation	10-46
10-12	NiCad Battery Tray Installation	10-48
10-13	Standard Battery Tray Installation	10-50
10-14	Battery Installation	10-54
10-15	Aft Battery Installation	10-56
10-16	Electrical Component Installation (Right Side Backwall)	10-58
10-17	Electrical Component Installation Relays Only (Right Side Backwall)	10-61
10-18	Electrical Components - Keel Installation	10-66
10-19	Generator Control Unit/T9 Terminal Strip Installation	10-72
10-20	Engine Oil Pressure and Torque Indication System	10-74
10-21	Engine T.O.T. Harness Terminal Block	10-76
10-22	Fire Detector Installation	10-78
10-23	Low Rotor Warning and Micro Switch Installation	10-80
10-24	TH-28 Chip Detector Program Continuity Sensor Installation	10-84
10-24.1	480/480B Programmed Continuity Sensors – Engine and Main Rotor Transmission Chip Detectors	10-86.2
10-24.2	480/480B Programmed Continuity Sensor – Tail Rotor Transmission Chip Detector	10-86.6
10-25	Bearing Temperature Warning System (Grease Lubricated)	10-88
10-26	Bearing Temperature Warning System (Oil Lubricated)	10-90
10-27	Engine Air Inlet Pressure System	10-94
10-28	Landing Light Assembly Installation	10-98
10-29	LED Landing Light Assembly Installation	10-100
10-30	Position/Anti-Collision Light Installation	10-104
10-31	Position/Anti-Collision Light Assembly	10-106
10-32	Position/Anti-Collision LED Light Assembly	10-108
10-33	Static Port and Pitot Tube Installation	10-110
10-34	Static and Pitot Line Installation	10-114
10-35	Instrument Console Shroud Installation	10-118
10-36	KMA 24H-71 Audio Panel Installation	10-120
10-37	GTX 327 Transponder Installation	10-124
10-38	GTX 327 Antenna Installation Forward (Preferred) Location	10-128
10-39	GTX 327 Antenna Installation Aft (Alternate) Location	10-132

UNCONTROLLED COPY WHEN DOWNLOADED OR PRINTED

Visit www.enstromhelicopter.com for instructions to order an original manual and to register for email notification of updates.

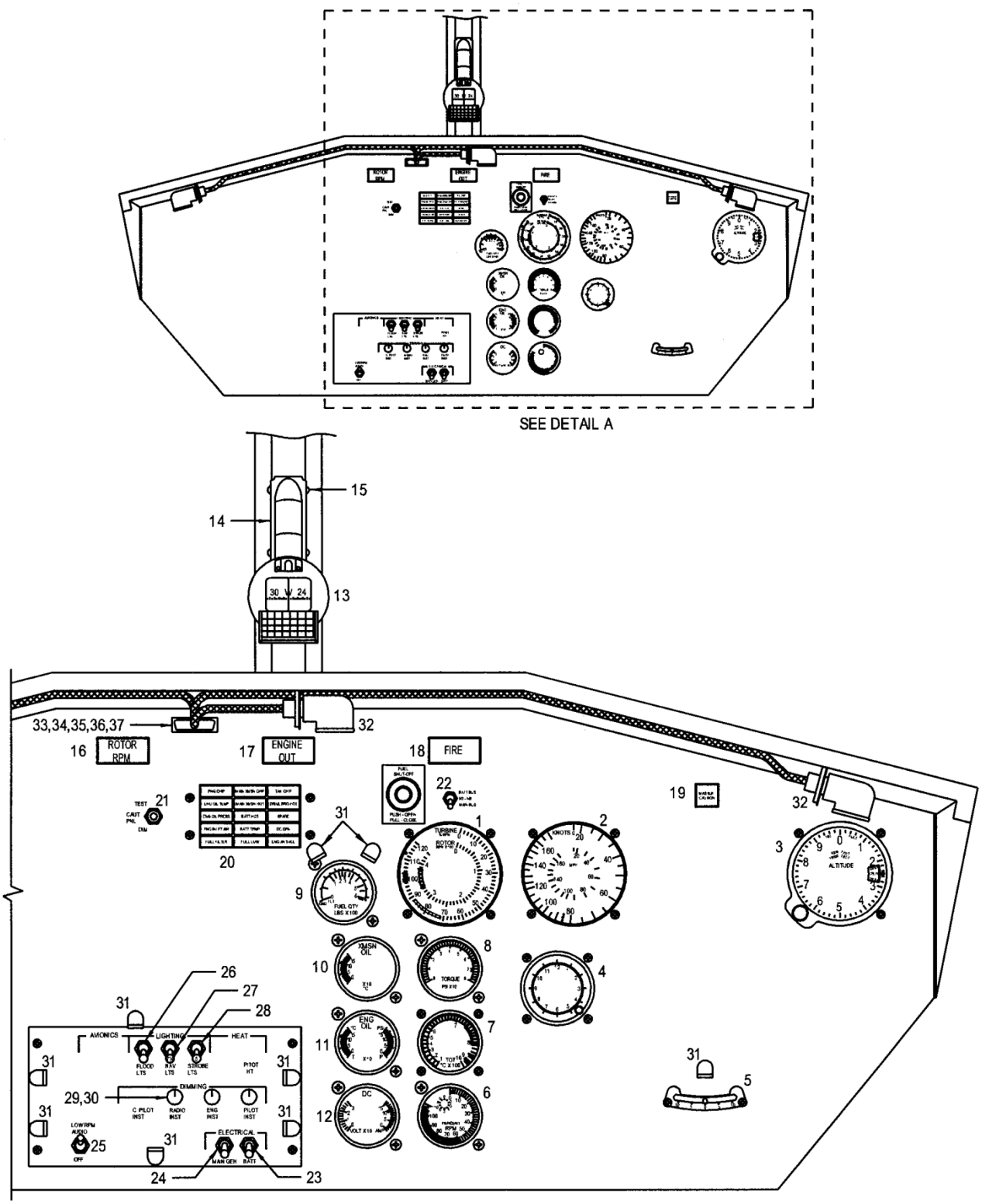

Standard Equipment

FIGURE 10-1. TH-28 INSTRUMENT PANEL EQUIPMENT INSTALLATION

UNCONTROLLED COPY WHEN DOWNLOADED OR PRINTED

Visit www.enstromhelicopter.com for instructions to order an original manual and to register for email notification of updates.

FIGURE 10-1. TH-28 INSTRUMENT PANEL EQUIPMENT INSTALLATION

ITEM NUMBER	PART NUMBER	DESCRIPTION	QTY PER ASSY	EFFECTIVITY		
				TH-28	480	480B
1Δ	ECD4053-1	. Dual Tachometer (B&D 56004-003)	1	X		
– ≡	AN515B6R10	. Screw	4	X		
–	MS3126F12-10S	. Connector (Electrical Harness)	1	X		
–	1-480319-0	. Housing, Cap (Indicator Light Tray)	1	X		
–	60618-1	. Pin (Indicator Light Tray)	2	X		
–	1-480318-0	. Socket Housing (Lighting Harness)	1	X		
–	60617-1	. Socket (Lighting Harness)	2	X		
2	8000B.439	. Airspeed Indicator	1	X		
–	AN515B6R16	. Screw	4	X		
–	A8944-632-493	. Mounting Clip	4	X		
–	1-480319-0	. Housing, Cap (Indicator Light Tray)	1	X		
–	60618-1	. Pin (Indicator Light Tray)	2	X		
–	1-480318-0	. Socket Housing (Lighting Harness)	1	X		
–	60617-1	. Socket (Lighting Harness)	2	X		
3	5934PD-3-A.253	. Altimeter	1	X		
–	AN515B6R16	. Screw	3	X		
–	A8944-632-493	. Mounting Clip	3	X		
–	1-480319-0	. Housing, Cap (Altimeter Light Tray)	1	X		
–	60618-1	. Pin (Altimeter Light Tray)	2	X		
–	1-480318-0	. Socket Housing (Lighting Harness)	1	X		
–	60617-1	. Socket (Lighting Harness)	2	X		
4	800-28V-BAT	. Clock	1	X		
–	AN515B6R16	. Screw	4	X		
–	A8944-632-493	. Mounting Clip	4	X		
5	1040	. Inclinometer	1	X		
– ≡	AN515B6R10	. Screw	2	X		
–	AN960-6	. Washer	2	X		
–	AN935-6	. Lock Washer	2	X		
–	AN340-6	. Nut	2	X		

UNCONTROLLED COPY WHEN DOWNLOADED OR PRINTED

Visit www.enstromhelicopter.com for instructions to order an original manual and to register for email notification of updates.

FIGURE 10-1. TH-28 INSTRUMENT PANEL EQUIPMENT INSTALLATION

ITEM NUMBER	PART NUMBER	DESCRIPTION	QTY PER ASSY	EFFECTIVITY		
				TH-28	480	480B
6	ECD4042-1	. N_1 Tachometer (INSCO 6501-3110)	1	X		
–	MS28042-1A	. Clamp, Mounting	1	X		
–	MS35215-58	. . Screw	1	X		
– ≡	MS24693-BB52	. . Screw	1	X		
–	CA3106F14S-5SF80	. Connector (Electrical Harness)	1	X		
7	ECD4044-1	. TOT Indicator (INSCO 5006-3006)	1	X		
–	AN515B6R16	. Screw	4	X		
–	A8944-632-493	. Mounting Clip	4	X		
–	1-480319-0	. Housing, Cap (Indicator Light Tray)	1	X		
–	60618-1	. Pin (Indicator Light Tray)	2	X		
–	1-480318-0	. Socket Housing (Lighting Harness)	1	X		
–	60617-1	. Socket (Lighting Harness)	2	X		
8	ECD4043-1	. Torque Indicator (INSCO 4344-3123)	1	X		
–	MS28042-1A	. Clamp, Mounting	1	X		
–	MS35215-58	. . Screw	1	X		
– ≡	MS24693-BB52	. . Screw	1	X		
–	CA3106F14S-5SF80	. Connector (Electrical Harness)	1	X		
9	267-1000–002	. Fuel Quantity Indicator	1	X		
–	MS28042-1A	. Clamp, Mounting	1	X		
–	MS35215-58	. . Screw	1	X		
– ≡	MS24693-BB52	. . Screw	1	X		
10	ECD4040-1	. Transmission Oil Temperature Indicator (INSCO 9036-3094)	1	X		
–	MS28042-1A	. Clamp, Mounting	1	X		
–	MS35215-58	. . Screw	1	X		
– ≡	MS24693-BB52	. . Screw	1	X		
–	MS3106F12-10SW	. Connector (Electrical Harness)	1	X		
11	ECD4035-1	. Engine Oil Pressure/Temperature Indicator (INSCO 9036-3093)	1	X		
–	MS28042-1A	. Clamp, Mounting	1	X		
–	MS35215-58	. . Screw	1	X		

UNCONTROLLED COPY WHEN DOWNLOADED OR PRINTED

Visit www.enstromhelicopter.com for instructions to order an original manual and to register for email notification of updates.

FIGURE 10-1. TH-28 INSTRUMENT PANEL EQUIPMENT INSTALLATION

ITEM NUMBER	PART NUMBER	DESCRIPTION	QTY PER ASSY	EFFECTIVITY		
				TH-28	480	480B
– ≡	MS24693-BB52	. . Screw	1	X		
–	MS3106F12-10S	. Connector (Electrical Harness)	1	X		
12	ECD4041-1	. Volt/Amp Indicator (INSCO 9021-3037)	1	X		
–	MS28042-1A	. Clamp, Mounting	1	X		
–	MS35215-58	. . Screw	1	X		
– ≡	MS24693-BB52	. . Screw	1	X		
–	CA3106F10-6S	. Connector (Electrical Harness)	1	X		
13	PAI700	. Compass	1	X		
–	327	. . Light Bulb	1	X		
–	AN931-3-5	. Grommet	1	X		
–	AN515B8R8	. Screw	2	X		
–	AN960B8	. Washer	4	X		
–	AN935B8	. Lock Washer	2	X		
–	AN340-8	. Nut	2	X		
14	4196562-11	. Bracket, Compass	1	X		
15	AN530-6R6	. Screw	4	X		
16	14399-003	. Light Assembly (Low Rotor)	1	X		
–	313	. . Light Bulb	2	X		
17	14399-002	. Light Assembly (Engine Out)	1	X		
–	313	. . Light Bulb	2	X		
18	14399-001	. Light Assembly (Fire)	1	X		
–	313	. . Light Bulb	2	X		
19	95-41-11-H6-55785	. Master Caution Annunciator/Switch	1	X		
–	6839	. . Light Bulb	4	X		
–	18-200	. Connector (Electrical Harness)	1	X		
–	M39029/22-192	. Socket (Electrical Harness)	7	X		
–	18-215	. Hole Filler (Electrical Harness)	7	X		
20	ECD4059-3	. Annunciator Panel	1	X		
–	327	. . Light Bulb	30	X		
–	90-42130-009	. . Segment, “ENG CHIP”	1	X		

UNCONTROLLED COPY WHEN DOWNLOADED OR PRINTED

Visit www.enstromhelicopter.com for instructions to order an original manual and to register for email notification of updates.

FIGURE 10-1. TH-28 INSTRUMENT PANEL EQUIPMENT INSTALLATION

ITEM NUMBER	PART NUMBER	DESCRIPTION	QTY PER ASSY	EFFECTIVITY		
				TH-28	480	480B
–	90-42130-010	. . Segment, “MAIN XMSN CHIP”	1	X		
–	90-42130-011	. . Segment, “TAIL CHIP”	1	X		
–	90-42130-012	. . Segment, “ENG OIL TEMP”	1	X		
–	90-42130-013	. . Segment, “MAIN XMSN HOT”	1	X		
–	90-42130-015	. . Segment, “ENG OIL PRESS”	1	X		
–	90-42130-016	. . Segment, “DRIVE BRG HOT”	1	X		
–	90-42130-017	. . Segment, “DC GEN”	1	X		
–	90-42130-018	. . Segment, “ENG AIR INLET	1	X		
–	90-42130-019	. . Segment, “SPARE” (Quantity 3 Each when Lead Acid Battery Installed)	1	X		
–	90-42130-021	. . Segment, “FUEL FILTER”	1	X		
–	90-42130-022	. . Segment, “FUEL LOW”	1	X		
–	90-42130-023	. . Segment, “BATTERY HOT”	1	X		
–	90-42130-024	. . Segment, “BATTERY TEMP”	1	X		
–	90-42130-026	. . Segment, “ENG ANTI-ICE”	1	X		
–	AN515B6R7	. Screw	4	X		
–	SD15M10JVL0	. Connector (Electrical Harness)	1	X		
–	SD15F10JVL0	. Connector (Electrical Harness)	1	X		
21	MS24525-31	. Switch (Caution Panel Test/Dim)	1	X		
22	7201SYZQE	. Switch (N_2/N_R Battery Bus)	1	X		
23	11TS15-2	. Switch (Battery)	1	X		
24	AP-1-3-50-051	. Switch (Generator)	1	X		
25	M5594/1-3	. Switch (Low RPM Audio)	1	X		
26	MS24523-21	. Switch (Flood Lights)	1	X		
27	7270-1-7 1/2	. Switch/Circuit Breaker (Navigation Lights)	1	X		
28	7270-1-5	. Switch/Circuit Breaker (Position Lights)	1	X		
29≡	381N-500-S	. Potentiometer	3	X		
30≡	KN500B1/8	. Knob	3	X		
31	01-0770119-15	. Post Light	9	X		
31†	A-8970B1-327	. Post Light (superseded by 01-0770119-15)	9	X		
–	327	. . Light Bulb	1	X		
32	A315HI-B-28V	. Light Assembly	3	X		
–	1495	. . Light Bulb	1	X		
–	AN526-632R6	. Screw	6	X		

UNCONTROLLED COPY WHEN DOWNLOADED OR PRINTED

Visit www.enstromhelicopter.com for instructions to order an original manual and to register for email notification of updates.

FIGURE 10-1. TH-28 INSTRUMENT PANEL EQUIPMENT INSTALLATION

ITEM NUMBER	PART NUMBER	DESCRIPTION	QTY PER ASSY	EFFECTIVITY		
				TH-28	480	480B
–	AN960-6	. Washer	6	X		
–	AN364-632A	. Nut	6	X		
33	DEU-9P	. Connector (Light Harness)	1	X		
34	D110278	. Spring Latch Plate (Light Harness)	1	X		
35	DE110963-1	. Back Shell (Light Harness)	1	X		
36	DEU-9S	. Connector (Electrical Harness)	1	X		
37	D110277	. Spring Latch (Electrical Harness)	1	X		

≡ See Appendix A for equivalent part information.

Δ Range markings must be modified in accordance with SDB T-028 Revision 2 or later revision.

† Part number not available.

UNCONTROLLED COPY WHEN DOWNLOADED OR PRINTED

Visit www.enstromhelicopter.com for instructions to order an original manual and to register for email notification of updates.

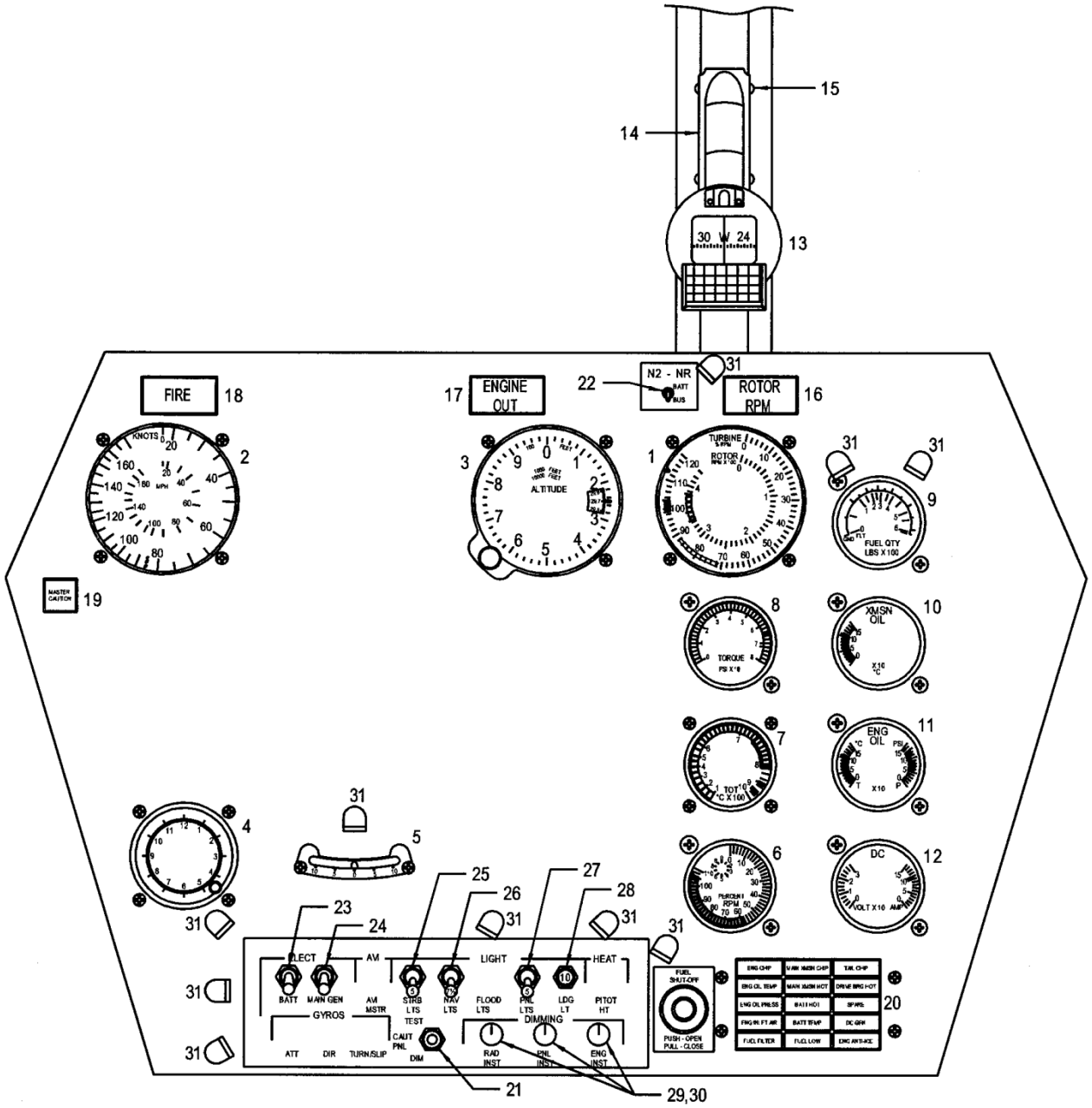

NOTE: INSTRUMENT PANEL LAYOUTS MAY VARY DEPENDING ON CUSTOMER PREFERENCES.

Standard Equipment

FIGURE 10-2. 480 STANDARD INSTRUMENT PANEL EQUIPMENT INSTALLATION

UNCONTROLLED COPY WHEN DOWNLOADED OR PRINTED

Visit www.enstromhelicopter.com for instructions to order an original manual and to register for email notification of updates.

FIGURE 10-2. 480 STANDARD INSTRUMENT PANEL EQUIPMENT INSTALLATION

ITEM NUMBER	PART NUMBER	DESCRIPTION	QTY PER ASSY	EFFECTIVITY		
				TH-28	480	480B
1*Δ	ECD4053-1	. Dual Tachometer (B&D 56004-003)	1		X	
– ≡	AN515B6R10	. Screw	4		X	
–	MS3126F12-10S	. Connector (Electrical Harness)	1		X	
–	1-480319-0	. Housing, Cap (Indicator Light Tray)	1		X	
–	60618-1	. Pin (Indicator Light Tray)	2		X	
–	1-480318-0	. Socket Housing (Lighting Harness)	1		X	
–	60617-1	. Socket (Lighting Harness)	2		X	
1**Δ	ECD4053-3	. Dual Tachometer	1		X	
–	MS28042-2A	. Clamp, Mounting	1		X	
–	MS35215-58	. . Screw	1		X	
– ≡	MS24693-BB52	. . Screw	1		X	
–	MS3126F12-10S	. Connector (Electrical Harness)	1		X	
1†Δ	ECD4053-4	. Dual Tachometer	1		X	
–	MS28042-2A	. Clamp, Mounting	1		X	
–	MS35215-58	. . Screw	1		X	
– ≡	MS24693-BB52	. . Screw	1		X	
–	MS3126F12-10S	. Connector (Electrical Harness)	1		X	
1‡Δ	ECD4053-5	. Dual Tachometer	1		X	
–	MS28042-2A	. Clamp, Mounting	1		X	
–	MS35215-58	. . Screw	1		X	
– ≡	MS24693-BB52	. . Screw	1		X	
–	MS3126F12-10S	. Connector (Electrical Harness)	1		X	
2	8000B.439	. Airspeed Indicator	1		X	
–	AN515B6R16	. Screw	4		X	
–	A8944-632-493	. Mounting Clip	4		X	
–	1-480319-0	. Housing, Cap (Indicator Light Tray)	1		X	
–	60618-1	. Pin (Indicator Light Tray)	2		X	
–	1-480318-0	. Socket Housing (Lighting Harness)	1		X	
–	60617-1	. Socket (Lighting Harness)	2		X	
2†	ECD4050-1	. Airspeed Indicator	1		X	
–	AN515B6R16	. Screw	4		X	
–	A8944-632-493	. Mounting Clip	4		X	

UNCONTROLLED COPY WHEN DOWNLOADED OR PRINTED

Visit www.enstromhelicopter.com for instructions to order an original manual and to register for email notification of updates.

FIGURE 10-2. 480 STANDARD INSTRUMENT PANEL EQUIPMENT INSTALLATION

ITEM NUMBER	PART NUMBER	DESCRIPTION	QTY PER ASSY	EFFECTIVITY		
				TH-28	480	480B
–	1-480319-0	. Housing, Cap (Indicator Light Tray)	1		X	
–	60618-1	. Pin (Indicator Light Tray)	2		X	
–	1-480318-0	. Socket Housing (Lighting Harness)	1		X	
–	60617-1	. Socket (Lighting Harness)	2		X	
3	5934PD-3-A.253	. Altimeter	1		X	
–	AN515B6R16	. Screw	3		X	
–	A8944-632-493	. Mounting Clip	3		X	
–	1-480319-0	. Housing, Cap (Altimeter Light Tray)	1		X	
–	60618-1	. Pin (Altimeter Light Tray)	2		X	
–	1-480318-0	. Socket Housing (Lighting Harness)	1		X	
–	60617-1	. Socket (Lighting Harness)	2		X	
					X	
4	800-28V-BAT	. Clock	1		X	
–	AN515B6R16	. Screw	4		X	
–	A8944-632-493	. Mounting Clip	4		X	
					X	
5	1040	. Inclinometer	1		X	
– ≡	AN515B6R10	. Screw	2		X	
–	AN960-6	. Washer	2		X	
–	AN935-6	. Lock Washer	2		X	
–	AN340-6	. Nut	2		X	
6	ECD4042-1	. N_1 Tachometer (INSCO 6501-3110)	1		X	
–	MS28042-1A	. Clamp, Mounting	1		X	
–	MS35215-58	. . Screw	1		X	
– ≡	MS24693-BB52	. . Screw	1		X	
–	CA3106F14S-5SF80	. Connector (Electrical Harness)	1		X	
7	ECD4044-1	. TOT Indicator (INSCO 5006-3006)	1		X	
–	AN515B6R16	. Screw	4		X	
–	A8944-632-493	. Mounting Clip	4		X	
–	1-480319-0	. Housing, Cap (Indicator Light Tray)	1		X	
–	60618-1	. Pin (Indicator Light Tray)	2		X	
–	1-480318-0	. Socket Housing (Lighting Harness)	1		X	
–	60617-1	. Socket (Lighting Harness)	2		X	

UNCONTROLLED COPY WHEN DOWNLOADED OR PRINTED

Visit www.enstromhelicopter.com for instructions to order an original manual and to register for email notification of updates.

FIGURE 10-2. 480 STANDARD INSTRUMENT PANEL EQUIPMENT INSTALLATION

ITEM NUMBER	PART NUMBER	DESCRIPTION	QTY PER ASSY	EFFECTIVITY		
				TH-28	480	480B
8*	ECD4043-1	. Torque Indicator (INSCO 4344-3123)	1		X	
–	MS28042-1A	. Clamp, Mounting	1		X	
–	MS35215-58	. . Screw	1		X	
– ≡	MS24693-BB52	. . Screw	1		X	
–	CA3106F14S-5SF80	. Connector (Electrical Harness)	1		X	
8†	ECD4043-4	. Torque Indicator	1		X	
8†	ECD4054-3	. Torque Indicator (Alternate)	1		X	
–	MS28042-1A	. Clamp, Mounting	1		X	
–	MS35215-58	. . Screw	1		X	
– ≡	MS24693-BB52	. . Screw	1		X	
–	CA3106F14S-5SF80	. Connector (Electrical Harness)	1		X	
9•	267-1000–002	. Fuel Quantity Indicator	1		X	
–	MS28042-1A	. Clamp, Mounting	1		X	
–	MS35215-58	. . Screw	1		X	
– ≡	MS24693-BB52	. . Screw	1		X	
9••	218-901-019	. Fuel Quantity Indicator	1		X	
–	MS28042-1A	. Clamp, Mounting	1		X	
–	MS35215-58	. . Screw	1		X	
– ≡	MS24693-BB52	. . Screw	1		X	
–	MS3126F10-6S	. Connector (Electrical Harness)	1		X	
9◦	ECD4038-4	. Fuel Quantity Indicator	1		X	
9◦	ECD4038-3	. Fuel Quantity Indicator (Alternate)	1		X	
–	MS28042-1A	. Clamp, Mounting	1		X	
–	MS35215-58	. . Screw	1		X	
– ≡	MS24693-BB52	. . Screw	1		X	
–	MS3126F10-6S	. Connector (Electrical Harness)	1		X	
10	ECD4040-1	. Transmission Oil Temperature Indicator (INSCO 9036-3094)	1		X	
–	MS28042-1A	. Clamp, Mounting	1		X	
–	MS35215-58	. . Screw	1		X	
– ≡	MS24693-BB52	. . Screw	1		X	

UNCONTROLLED COPY WHEN DOWNLOADED OR PRINTED

Visit www.enstromhelicopter.com for instructions to order an original manual and to register for email notification of updates.

FIGURE 10-2. 480 STANDARD INSTRUMENT PANEL EQUIPMENT INSTALLATION

ITEM NUMBER	PART NUMBER	DESCRIPTION	QTY PER ASSY	EFFECTIVITY		
				TH-28	480	480B
–	MS3106F12-10SW	. Connector (Electrical Harness)	1		X	
11	ECD4035-1	. Engine Oil Pressure/Temperature Indicator (INSCO 9036-3093)	1		X	
–	MS28042-1A	. Clamp	1		X	
–	MS35215-58	. . Screw	1		X	
– ≡	MS24693-BB52	. . Screw	1		X	
–	MS3106F12-10S	. Connector (Electrical Harness)	1		X	
12	ECD4041-1	. Volt/Amp Indicator (INSCO 9021-3037)	1		X	
–	MS28042-1A	. Clamp	1		X	
–	MS35215-58	. . Screw	1		X	
– ≡	MS24693-BB52	. . Screw	1		X	
–	CA3106F10-6S	. Connector (Electrical Harness)	1		X	
13	PAI700	. Compass	1		X	
–	327	. . Light Bulb	1		X	
–	AN931-3-5	. Grommet	1		X	
–	AN515B8R8	. Screw	2		X	
–	AN960B8	. Washer	4		X	
–	AN935B8	. Lock Washer	2		X	
–	AN340-8	. Nut	2		X	
14	4196562-11	. Bracket, Compass	1		X	
15	AN530-6R6	. Screw	4		X	
16	14399-003	. Light Assembly (Low Rotor)	1		X	
–	313	. . Light Bulb	2		X	
17	14399-002	. Light Assembly (Engine Out)	1		X	
–	313	. . Light Bulb	2		X	
18	14399-001	. Light Assembly (Fire)	1		X	
–	313	. . Light Bulb	2		X	
19	95-41-11-H6-55785	. Master Caution Annunciator/Switch	1		X	
–	6839	. . Light Bulb	4		X	
–	18-200	. Connector (Electrical Harness)	1		X	
–	M39029/22-192	. Socket (Electrical Harness)	7		X	

UNCONTROLLED COPY WHEN DOWNLOADED OR PRINTED

Visit www.enstromhelicopter.com for instructions to order an original manual and to register for email notification of updates.

FIGURE 10-2. 480 STANDARD INSTRUMENT PANEL EQUIPMENT INSTALLATION

ITEM NUMBER	PART NUMBER	DESCRIPTION	QTY PER ASSY	EFFECTIVITY		
				TH-28	480	480B
–	18-215	. Hole Filler (Electrical Harness)	7		X	
20	ECD4059-3	. Annunciator Panel	1		X	
–	327	. . Light Bulb	30		X	
–	90-42130-009	. . Segment, “ENG CHIP”	1		X	
–	90-42130-010	. . Segment, “MAIN XMSN CHIP”	1		X	
–	90-42130-011	. . Segment, “TAIL CHIP”	1		X	
–	90-42130-012	. . Segment, “ENG OIL TEMP”	1		X	
–	90-42130-013	. . Segment, “MAIN XMSN HOT”	1		X	
–	90-42130-015	. . Segment, “ENG OIL PRESS”	1		X	
–	90-42130-016	. . Segment, “DRIVE BRG HOT”	1		X	
–	90-42130-017	. . Segment, “DC GEN”	1		X	
–	90-42130-018	. . Segment, “ENG AIR INLET	1		X	
–	90-42130-019	. . Segment, “SPARE” (Quantity 3 Each when Lead Acid Battery Installed)	1		X	
–	90-42130-021	. . Segment, “FUEL FILTER”	1		X	
–	90-42130-022	. . Segment, “FUEL LOW”	1		X	
–	90-42130-023	. . Segment, “BATTERY HOT”	1		X	
–	90-42130-024	. . Segment, “BATTERY TEMP”	1		X	
–	90-42130-026	. . Segment, “ENG ANTI-ICE”	1		X	
–	AN515B6R7	. Screw	4		X	
–	SD15M10JVL0	. Connector (Electrical Harness)	1		X	
–	SD15F10JVL0	. Connector (Electrical Harness)	1		X	
21	MS24525-31	. Switch (Caution Panel Test/Dim)	1		X	
22	7201SYZQE	. Switch (N_2/N_R Battery Bus)	1		X	
23	11TS15-2	. Switch (Battery)	1		X	
24	AP-1-3-50-051	. Switch (Generator)	1		X	
25	7270-1-5	. Switch/Circuit Breaker (Position Lights)	1		X	
26	7270-1-7 1/2	. Switch/Circuit Breaker (Navigation Lights)	1		X	
27	7270-1-5	. Switch/Circuit Breaker (Panel Lights)	1		X	
28	MS26574-10	. Circuit Breaker, 10 Amp (Landing Light)	1		X	
29 ≡	381N-500-S	. Potentiometer	3		X	
30≡	KN500B1/8	. Knob	3		X	

UNCONTROLLED COPY WHEN DOWNLOADED OR PRINTED

Visit www.enstromhelicopter.com for instructions to order an original manual and to register for email notification of updates.

FIGURE 10-2. 480 STANDARD INSTRUMENT PANEL EQUIPMENT INSTALLATION

ITEM NUMBER	PART NUMBER	DESCRIPTION	QTY PER ASSY	EFFECTIVITY		
				TH-28	480	480B
31◦◦	01-0770119-15	. Post Light	10		X	
31◦◦▼	A-8970B1-327	. Post Light (Superseded by 01-0770119-15)	10		X	
–	327	. . Light Bulb	1		X	

*	480, S/N 5001 thru 5013, and 5015.
**	Alternate Indicator installation: 480, S/N 5001 thru 5013, and 5015.
†	480, S/N 5014, 5016 and subsequent.
‡	480, S/N 5014, 5016 and subsequent if equipped with the optional pop-out floats.
•	480, S/N 5001 thru 5005, and 5010.
••	480, S/N 5006 thru 5009.
◦	480, S/N 5011 and subsequent.
◦◦	Quantity 8 when using 218-901-019 or ECD4038-4 Fuel Quantity Indicator.
≡	See Appendix A for equivalent part information.
Δ	Range markings must be modified in accordance with SDB T-028 Revision 2 or later revision.
▼	Part number not available.

UNCONTROLLED COPY WHEN DOWNLOADED OR PRINTED

Visit www.enstromhelicopter.com for instructions to order an original manual and to register for email notification of updates.

INTENTIONALLY LEFT BLANK

UNCONTROLLED COPY WHEN DOWNLOADED OR PRINTED

Visit www.enstromhelicopter.com for instructions to order an original manual and to register for email notification of updates.

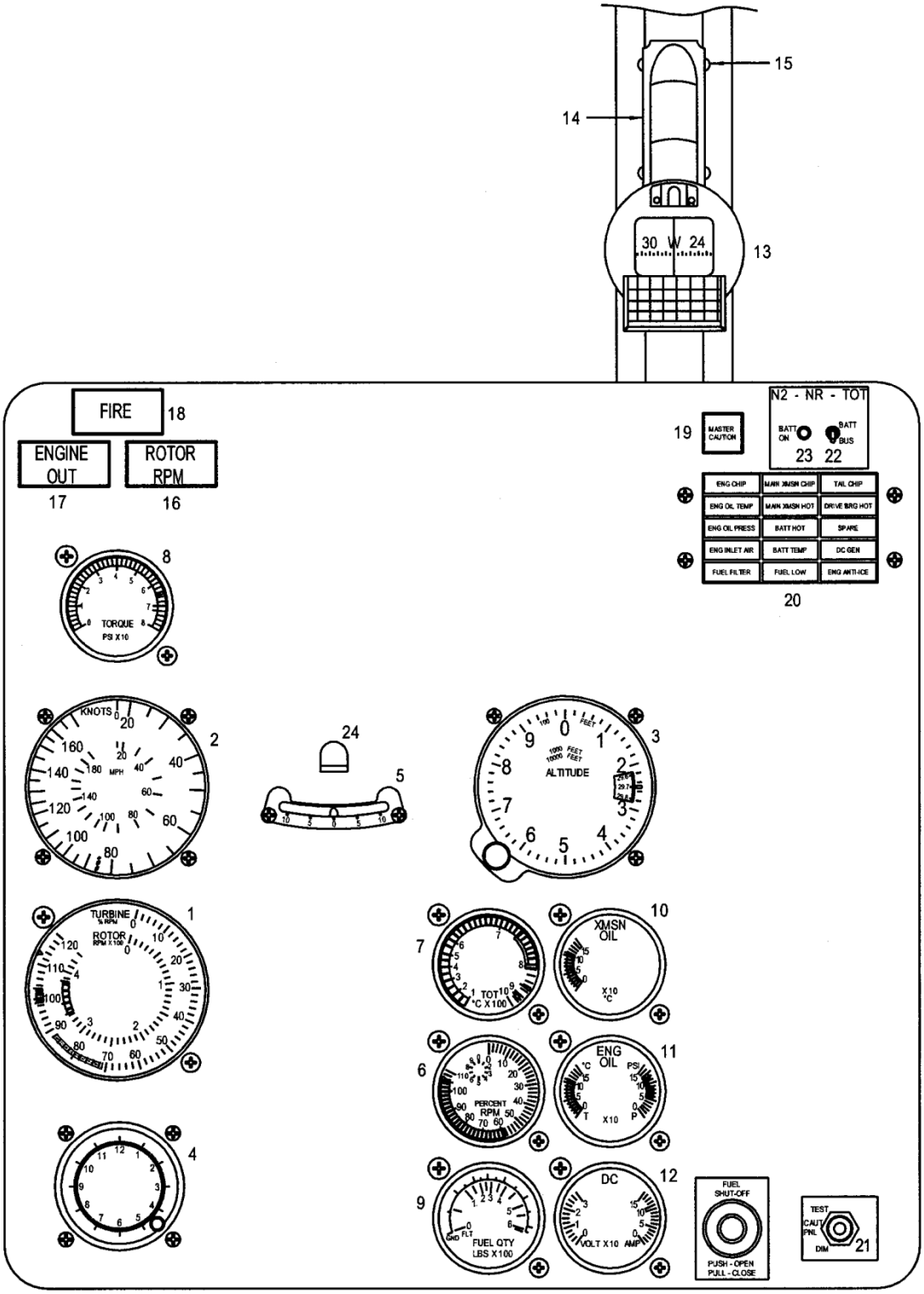

NOTE: INSTRUMENT PANEL LAYOUTS MAY VARY DEPENDING ON CUSTOMER PREFERENCES.

Standard Equipment
480B: S/N 5042 thru 5045, and 5047

FIGURE 10-3. 480 (OPTIONAL)/480B INSTRUMENT PANEL EQUIPMENT INSTALLATION

UNCONTROLLED COPY WHEN DOWNLOADED OR PRINTED

Visit www.enstromhelicopter.com for instructions to order an original manual and to register for email notification of updates.

FIGURE 10-3. 480 (OPTIONAL)/480B INSTRUMENT PANEL EQUIPMENT INSTALLATION

ITEM NUMBER	PART NUMBER	DESCRIPTION	QTY PER ASSY	EFFECTIVITY		
				TH-28	480	480B
1	ECD4053-7	. Dual Tachometer	1		X	X
–	MS28042-2A	. Clamp, Mounting	1		X	X
–	MS35215-58	. . Screw	1		X	X
– ≡	MS24693-BB52	. . Screw	1		X	X
–	MS3126F12-10S	. Connector (Electrical Harness)	1		X	X
1*Δ	ECD4053-5	. Dual Tachometer	1		X	
–	MS28042-2A	. Clamp, Mounting	1		X	
–	MS35215-58	. . Screw	1		X	
– ≡	MS24693-BB52	. . Screw	1		X	
–	MS3126F12-10S	. Connector (Electrical Harness)	1		X	
2	ECD4050-1	. Airspeed Indicator	1		X	X
–	AN515B6R16	. Screw	4		X	X
–●	MS33737-16C	. Nut (Mounting)	4		X	X
–	A8944-632-493	. Mounting Clip (Superseded by MS33737-16C)	4		X	X
–	1-480319-0	. Housing, Cap (Indicator Light Tray)	1		X	X
–	60618-1	. Pin (Indicator Light Tray)	2		X	X
–	1-480318-0	. Socket Housing (Lighting Harness)	1		X	X
–	60617-1	. Socket (Lighting Harness)	2		X	X
3	5934PD-3-A.253	. Altimeter	1		X	X
–	AN515B6R16	. Screw	3		X	X
–●	MS33737-16C	. Nut (Mounting)	3		X	X
–	A8944-632-493	. Mounting Clip (Superseded by MS33737-16C)	3		X	X
–	1-480319-0	. Housing, Cap (Altimeter Light Tray)	1		X	X
–	60618-1	. Pin (Altimeter Light Tray)	2		X	X
–	1-480318-0	. Socket Housing (Lighting Harness)	1		X	X
–	60617-1	. Socket (Lighting Harness)	2		X	X
4	800-28V-BAT	. Clock	1		X	X
–	AN515B6R16	. Screw	4		X	X
–	A8944-632-493	. Mounting Clip	4		X	X
5	1040	. Inclinometer	1		X	X
– ≡	AN515B6R10	. Screw	2		X	X
–	AN960-6	. Washer	2		X	X

UNCONTROLLED COPY WHEN DOWNLOADED OR PRINTED

Visit www.enstromhelicopter.com for instructions to order an original manual and to register for email notification of updates.

FIGURE 10-3. 480 (OPTIONAL)/480B INSTRUMENT PANEL EQUIPMENT INSTALLATION

ITEM NUMBER	PART NUMBER	DESCRIPTION	QTY PER ASSY	EFFECTIVITY		
				TH-28	480	480B
–	AN935-6	. Lock Washer	2		X	X
–	AN340-6	. Nut	2		X	X
6	ECD4042-1	. N_1 Tachometer (INSCO 6501-3110)	1		X	X
–	MS28042-1A	. Clamp, Mounting	1		X	X
–	MS35215-58	. . Screw	1		X	X
– ≡	MS24693-BB52	. . Screw	1		X	X
–	CA3106F14S-5SF80	. Connector (Electrical Harness)	1		X	X
7	ECD4044-4	. TOT Indicator	1		X	X
–	MS28042-1A	. Clamp, Mounting	1		X	X
–	MS35215-58	. . Screw	1		X	X
– ≡	MS24693-BB52	. . Screw	1		X	X
–	MS3106F12-10S	. Connector (Electrical Harness)	1		X	X
8	ECD4043-4	. Torque Indicator	1		X	
8	ECD4054-3	. Torque Indicator (Alternate)	1		X	
–	MS28042-1A	. Clamp, Mounting	1		X	
–	MS35215-58	. . Screw	1		X	
– ≡	MS24693-BB52	. . Screw	1		X	
–	CA3106F14S-5SF80	. Connector (Electrical Harness)	1		X	
8	ECD4043-5	. Torque Indicator	1			X
–	MS28042-1A	. Clamp, Mounting	1			X
–	MS35215-58	. . Screw	1			X
– ≡	MS24693-BB52	. . Screw	1			X
–	CA3106F14S-5SF80	. Connector (Electrical Harness)	1			X
8**	ECD4052-5	. Torque Indicator (Optional Equipment)	1		X	
8**	ECD4052-4	. Torque Indicator (Optional Equipment) (Alternate)	1		X	
–	MS28042-2A	. Clamp	1		X	
–	MS35215-58	. . Screw	1		X	
– ≡	MS24693-BB52	. . Screw	1		X	
–	CA3106F14S-5SF80	. Connector (Electrical Harness)	1		X	

UNCONTROLLED COPY WHEN DOWNLOADED OR PRINTED

Visit www.enstromhelicopter.com for instructions to order an original manual and to register for email notification of updates.

FIGURE 10-3. 480 (OPTIONAL)/480B INSTRUMENT PANEL EQUIPMENT INSTALLATION

ITEM NUMBER	PART NUMBER	DESCRIPTION	QTY PER ASSY	EFFECTIVITY		
				TH-28	480	480B
9	ECD4038-4	. Fuel Quantity Indicator	1		X	X
9	ECD4038-3	. Fuel Quantity Indicator (Alternate)	1		X	X
–	MS28042-1A	. Clamp, Mounting	1		X	X
–	MS35215-58	. . Screw	1		X	X
– ≡	MS24693-BB52	. . Screw	1		X	X
–	MS3126F10-6S	. Connector (Electrical Harness)	1		X	X
10	ECD4040-1	. Transmission Oil Temperature Indicator (INSCO 9036-3094)	1		X	X
–	MS28042-1A	. Clamp, Mounting	1		X	X
–	MS35215-58	. . Screw	1		X	X
– ≡	MS24693-BB52	. . Screw	1		X	X
–	MS3106F12-10SW	. Connector (Electrical Harness)	1		X	X
11	ECD4035-1	. Engine Oil Pressure/Temperature Indicator (INSCO 9036-3093)	1		X	X
–	MS28042-1A	. Clamp, Mounting	1		X	X
–	MS35215-58	. . Screw	1		X	X
– ≡	MS24693-BB52	. . Screw	1		X	X
–	MS3106F12-10S	. Connector (Electrical Harness)	1		X	X
12	ECD4041-7	. Volt/Amp Indicator (INSCO 9021-3037)	1		X	X
–	MS28042-1A	. Clamp, Mounting	1		X	X
–	MS35215-58	. . Screw	1		X	X
– ≡	MS24693-BB52	. . Screw	1		X	X
–	CA3106F10-6S	. Connector (Electrical Harness)	1		X	X
13	PAI700	. Compass	1		X	X
–	327	. . Light Bulb	1		X	X
–	AN931-3-5	. Grommet	1		X	X
–	AN515B8R8	. Screw	2		X	X
–	AN960B8	. Washer	4		X	X
–	AN935B8	. Lock Washer	2		X	X
–	AN340-8	. Nut	2		X	X
14	4196562-11	. Bracket, Compass	1		X	X
15	AN530-6R6	. Screw	4		X	X

UNCONTROLLED COPY WHEN DOWNLOADED OR PRINTED

Visit www.enstromhelicopter.com for instructions to order an original manual and to register for email notification of updates.

FIGURE 10-3. 480 (OPTIONAL)/480B INSTRUMENT PANEL EQUIPMENT INSTALLATION

ITEM NUMBER	PART NUMBER	DESCRIPTION	QTY PER ASSY	EFFECTIVITY		
				TH-28	480	480B
16	14399-003	. Light Assembly (Low Rotor)	1		X	X
–	313	. . Light Bulb	2		X	X
17	14399-002	. Light Assembly (Engine Out)	1		X	X
–	313	. . Light Bulb	2		X	X
18	14399-001	. Light Assembly (Fire)	1		X	X
–	313	. . Light Bulb	2		X	X
19	95-41-11-H6-55785	. Master Caution Annunciator/Switch	1		X	X
–	6839	. . Light Bulb	4		X	X
–	18-200	. Connector (Electrical Harness)	1		X	X
–	M39029/22-192	. Socket (Electrical Harness)	7		X	X
–	18-215	. Hole Filler (Electrical Harness)	7		X	X
20	ECD4059-3	. Annunciator Panel	1		X	
–	327	. . Light Bulb	30		X	
–	90-42130-009	. . Segment, “ENG CHIP”	1		X	
–	90-42130-010	. . Segment, “MAIN XMSN CHIP”	1		X	
–	90-42130-011	. . Segment, “TAIL CHIP”	1		X	
–	90-42130-012	. . Segment, “ENG OIL TEMP”	1		X	
–	90-42130-013	. . Segment, “MAIN XMSN HOT”	1		X	
–	90-42130-015	. . Segment, “ENG OIL PRESS”	1		X	
–	90-42130-016	. . Segment, “DRIVE BRG HOT”	1		X	
–	90-42130-017	. . Segment, “DC GEN”	1		X	
–	90-42130-018	. . Segment, “ENG AIR INLET	1		X	
–	90-42130-019	. . Segment, “SPARE” (Quantity 3 Each when Lead Acid Battery Installed)	1		X	
–	90-42130-021	. . Segment, “FUEL FILTER”	1		X	
–	90-42130-022	. . Segment, “FUEL LOW”	1		X	
–	90-42130-023	. . Segment, “BATTERY HOT”	1		X	
–	90-42130-024	. . Segment, “BATTERY TEMP”	1		X	
–	90-42130-026	. . Segment, “ENG ANTI-ICE”	1		X	
–	AN515B6R7	. Screw	4		X	
–	SD15M10JVL0	. Connector (Electrical Harness)	1		X	
–	SD15F10JVL0	. Connector (Electrical Harness)	1		X	

UNCONTROLLED COPY WHEN DOWNLOADED OR PRINTED

Visit www.enstromhelicopter.com for instructions to order an original manual and to register for email notification of updates.

FIGURE 10-3. 480 (OPTIONAL)/480B INSTRUMENT PANEL EQUIPMENT INSTALLATION

ITEM NUMBER	PART NUMBER	DESCRIPTION	QTY PER ASSY	EFFECTIVITY		
				TH-28	480	480B
20	ECD4059-5	. Annunciator Panel	1			X
–	327	. . Light Bulb	30			X
–	90-42130-009	. . Segment, “ENG CHIP”	1			X
–	90-42130-010	. . Segment, “MAIN XMSN CHIP”	1			X
–	90-42130-011	. . Segment, “TAIL CHIP”	1			X
–	90-42130-012	. . Segment, “ENG OIL TEMP”	1			X
–	90-42130-013	. . Segment, “MAIN XMSN HOT”	1			X
–	90-42130-015	. . Segment, “ENG OIL PRESS”	1			X
–	90-42130-016	. . Segment, “DRIVE BRG HOT”	1			X
–	90-42130-017	. . Segment, “DC GEN”	1			X
–	90-42130-018	. . Segment, “ENG AIR INLET	1			X
–	90-42130-019	. . Segment, “SPARE” (Used when Lead Acid Battery Installed)	2			X
–	90-42130-021	. . Segment, “FUEL FILTER”	1			X
–	90-42130-022	. . Segment, “FUEL LOW”	1			X
–	90-42130-023	. . Segment, “BATTERY HOT”	1			X
–	90-42130-024	. . Segment, “BATTERY TEMP”	1			X
–	90-42130-026	. . Segment, “ENG ANTI-ICE”	1			X
–	90-42130-028	. . Segment, “MRGB PRESS”	1			X
–	AN515B6R7	. Screw	4			X
–	SD15M10JVL0	. Connector (Electrical Harness)	1			X
–	SD15F10JVL0	. Connector (Electrical Harness)	1			X
21	MS24525-31	. Switch (Caution Panel Test/Dim)	1		X	X
22	7401SYZQE	. Switch (N_2/N_R Battery Bus)	1		X	X
23	L58D-Y24-W	. LED Light	1		X	X
24†	01-0770119-15	. Post Light	1		X	X

* 480, S/N 5014, 5016 and subsequent if equipped with the optional pop-out floats.

** 3" Diameter Indicator (Customer Option)

† Not used if Inclinometer is not installed.

≡ See Appendix A for equivalent part information.

● Effectivity 480B S/N 5042 and subsequent. Retrofittable to 480 S/N 5001 – 5041.

Δ Range markings must be modified in accordance with SDB T-028 Revision 2 or later revision.

UNCONTROLLED COPY WHEN DOWNLOADED OR PRINTED

Visit www.enstromhelicopter.com for instructions to order an original manual and to register for email notification of updates.

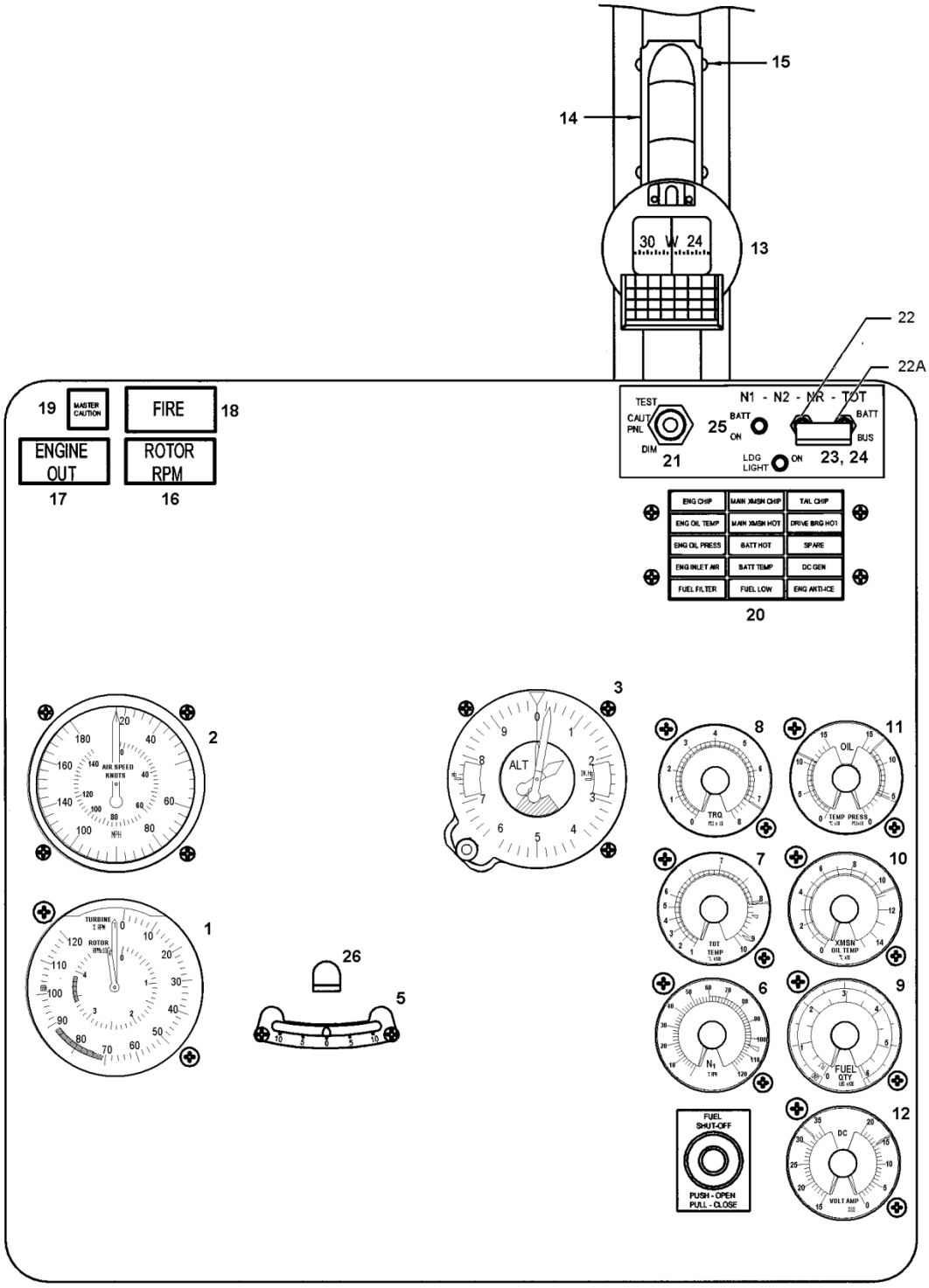

NOTE: INSTRUMENT PANEL LAYOUTS MAY VARY DEPENDING ON CUSTOMER PREFERENCES.

Standard Equipment
480B: S/N 5046, 5048 through 5049
Sheet 1 of 4

FIGURE 10-4. 480B INSTRUMENT PANEL EQUIPMENT INSTALLATION

UNCONTROLLED COPY WHEN DOWNLOADED OR PRINTED

Visit www.enstromhelicopter.com for instructions to order an original manual and to register for email notification of updates.

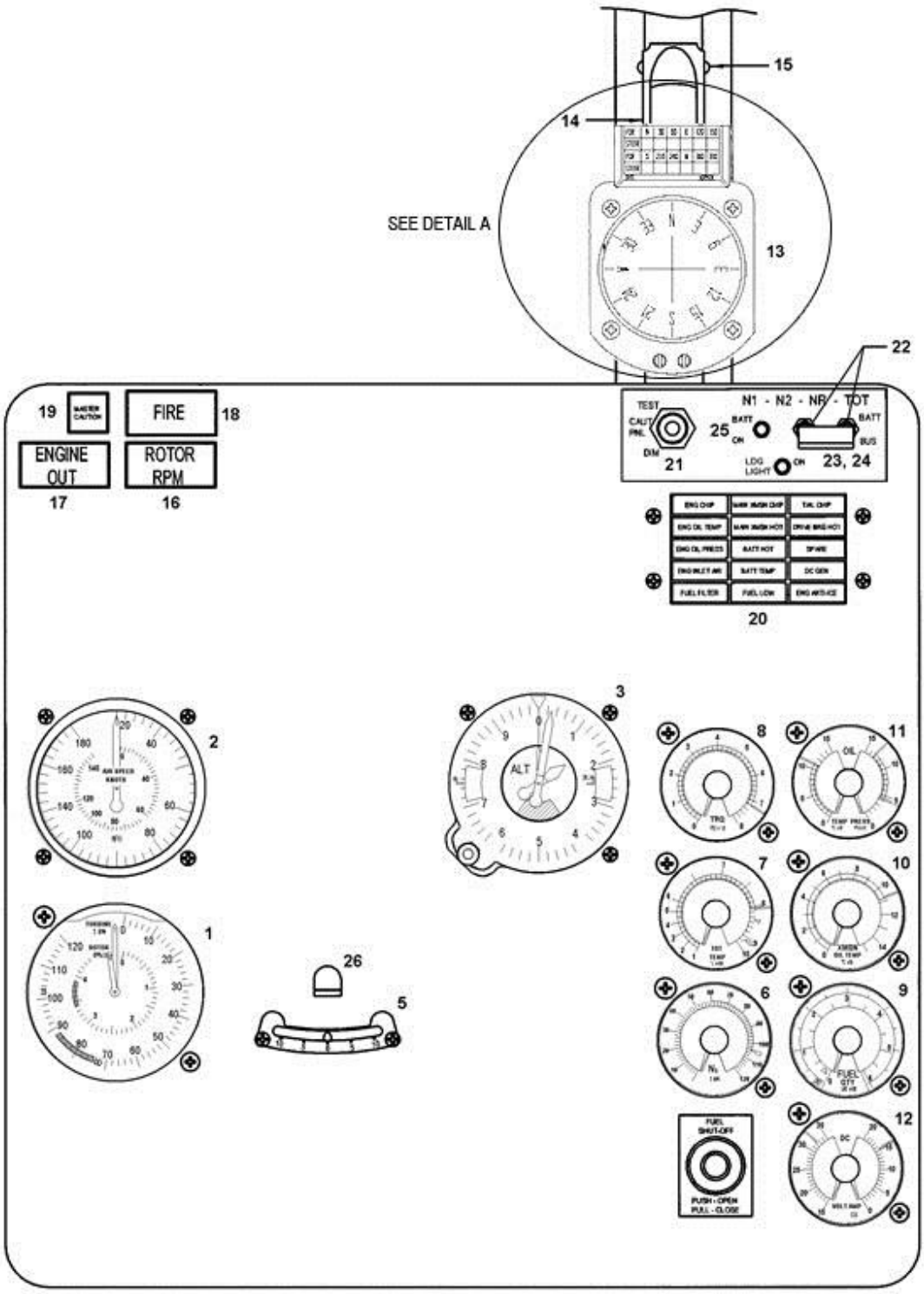

NOTE: INSTRUMENT PANEL LAYOUTS MAY VARY DEPENDING ON CUSTOMER PREFERENCES.

Standard Equipment
480B: S/N 5050 through 5135
Sheet 2 of 4

FIGURE 10-4. 480B INSTRUMENT PANEL EQUIPMENT INSTALLATION

UNCONTROLLED COPY WHEN DOWNLOADED OR PRINTED

Visit www.enstromhelicopter.com for instructions to order an original manual and to register for email notification of updates.

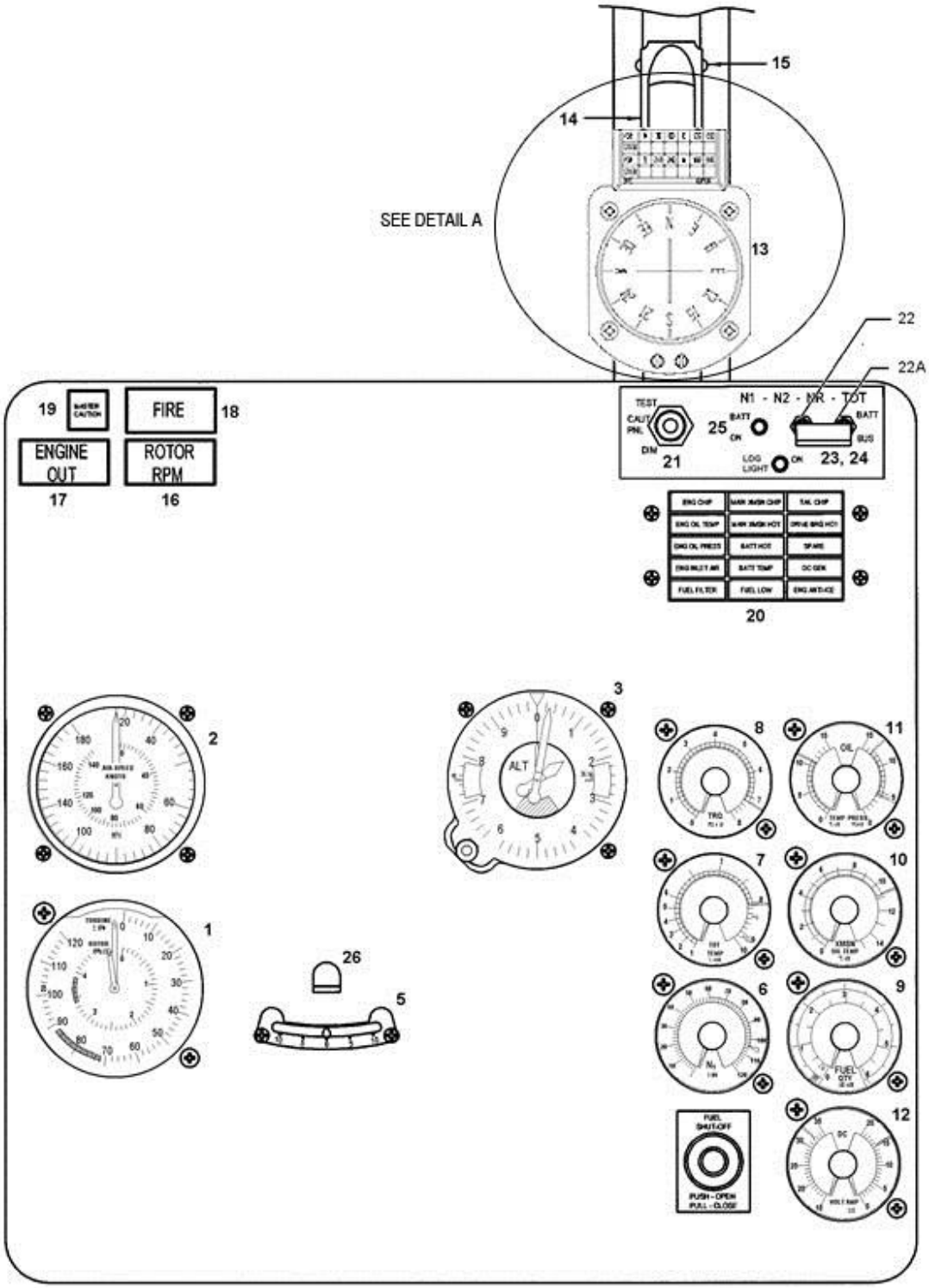

NOTE: INSTRUMENT PANEL LAYOUTS MAY VARY DEPENDING ON CUSTOMER PREFERENCES.

Standard Equipment
480B: S/N 5136 and Subsequent
Sheet 3 of 4

FIGURE 10-4. 480B INSTRUMENT PANEL EQUIPMENT INSTALLATION

UNCONTROLLED COPY WHEN DOWNLOADED OR PRINTED

Visit www.enstromhelicopter.com for instructions to order an original manual and to register for email notification of updates.

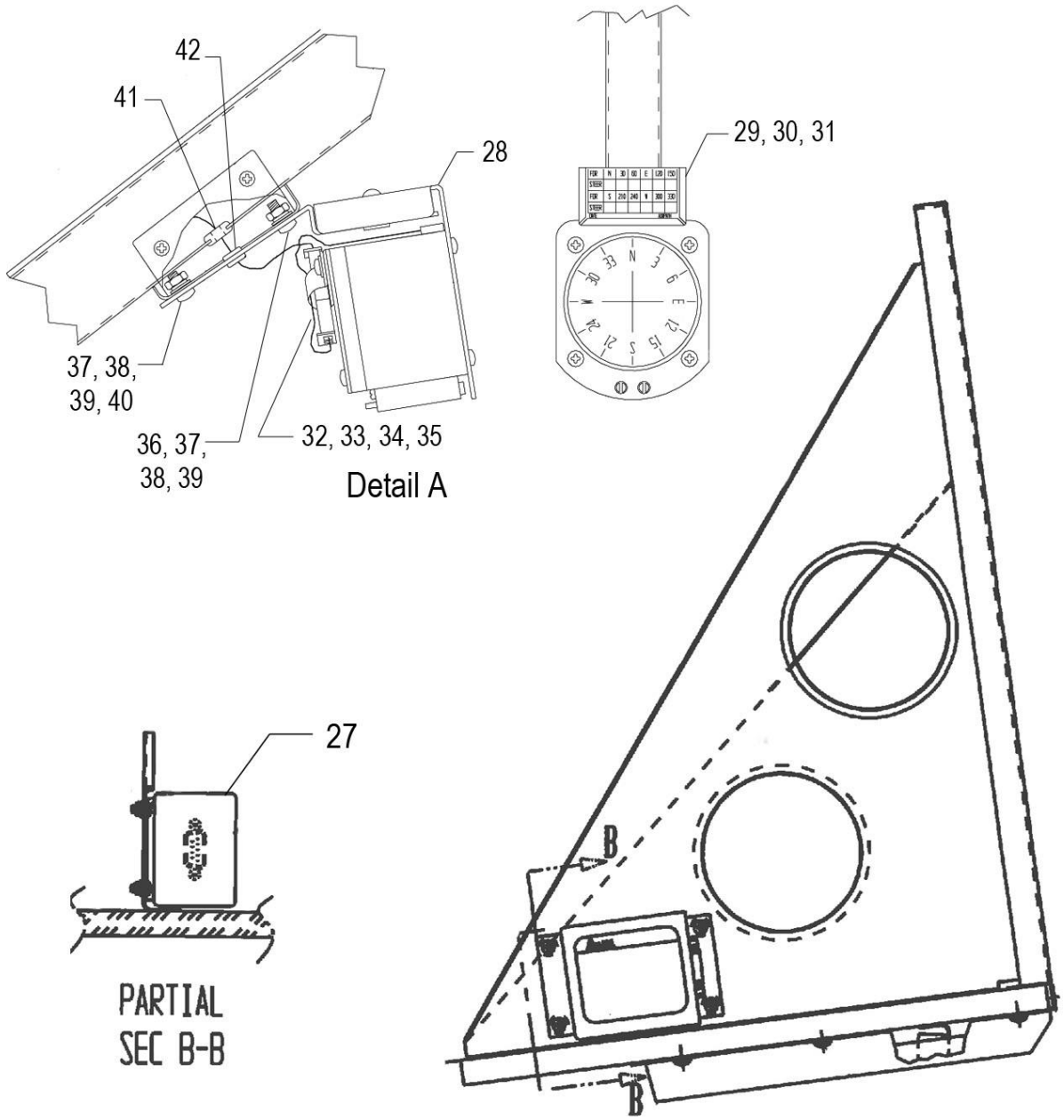

Standard Equipment
480B: S/N 5198 and Subsequent
Sheet 4 of 4

FIGURE 10-4. 480B INSTRUMENT PANEL EQUIPMENT INSTALLATION

UNCONTROLLED COPY WHEN DOWNLOADED OR PRINTED

Visit www.enstromhelicopter.com for instructions to order an original manual and to register for email notification of updates.

FIGURE 10-4. 480B INSTRUMENT PANEL EQUIPMENT INSTALLATION

ITEM NUMBER	PART NUMBER	DESCRIPTION	QTY PER ASSY	EFFECTIVITY		
				TH-28	480	480B
1	ECD4053-7	. Dual Tachometer	1			X
–	MS28042-2A	. Clamp	1			X
–	MS35215-58	. . Screw	1			X
– ≡	MS24693-BB52	. . Screw	1			X
–	MS3126F12-10S	. Connector (Electrical Harness)	1			X
–¤	4230012-1	. Placard	1			X
2	ECD4050-1	. Airspeed Indicator	1			X
–	AN515B6R16	. Screw	4			X
–	MS33737-16C	. Mounting Clip	4			X
–	1-480319-0	. Housing, Pin (Indicator Light Tray)	1			X
–	60618-1	. Pin (Indicator Light Tray)	2			X
–	1-480318-0	. Socket Housing (Lighting Harness)	1			X
–	60617-1	. Socket (Lighting Harness)	2			X
3	5934PD-3-A.253	. Altimeter	1			X
–	AN515B6R16	. Screw	3			X
–	MS33737-16C	. Mounting Clip	3			X
–	1-480319-0	. Housing, Pin (Altimeter Light Tray)	1			X
–	60618-1	. Pin (Altimeter Light Tray)	2			X
–	1-480318-0	. Socket Housing (Lighting Harness)	1			X
–	60617-1	. Socket (Lighting Harness)	2			X
4Δ	803-28V	. Clock	1			X
–	MS35214-15	. Screw	4			X
–	C307PS	. Temperature Probe	1			X
–	AN960D516L	. Washer	1			X
4	800-28V-BAT	. Clock (Superseded by 803-28V)	1			X
–	AN515B6R16	. Screw	4			X
–	A8944-632-493	. Mounting Clip	4			X
5	1040	. Inclinometer	1			X
–	AN515B6R14	. Screw	2			X
–	AN960-6L	. Washer	2			X
–	AN364-632A	. Nut	2			X

UNCONTROLLED COPY WHEN DOWNLOADED OR PRINTED

Visit www.enstromhelicopter.com for instructions to order an original manual and to register for email notification of updates.

FIGURE 10-4. 480B INSTRUMENT PANEL EQUIPMENT INSTALLATION

ITEM NUMBER	PART NUMBER	DESCRIPTION	QTY PER ASSY	EFFECTIVITY		
				TH-28	480	480B
6	ECD4042-7	. N_1 Tachometer (Horizon Aerospace)	1			X
–	MS28042-1A	. Clamp, Mounting	1			X
–	MS35215-58	. . Screw	1			X
– ≡	MS24693-BB52	. . Screw	1			X
–	MS27473E14B15S	. Connector (Electrical Harness)	1			X
–	MS27506B14-2	. Back Shell (Electrical Harness)	1			X
–	MS27488-20	. Wire Hole Filler (Electrical Harness)	7			X
–	MS27488-16	. Wire Hole Filler (Electrical Harness)	1			X
7	ECD4044-5	. TOT Indicator (Horizon Aerospace)	1			X
–	MS28042-1A	. Clamp, Mounting	1			X
–	MS35215-58	. . Screw	1			X
– ≡	MS24693-BB52	. . Screw	1			X
–	MS27473E14B18SA	. Connector (Electrical Harness)	1			X
–	MS27506B14-2	. Back Shell (Electrical Harness)	1			X
–	MS27488-20	. Wire Hole Filler (Electrical Harness)	11			X
8	ECD4043-7	. Torque Indicator (Horizon Aerospace)	1			X
–	MS28042-1A	. Clamp, Mounting	1			X
–	MS35215-58	. . Screw	1			X
– ≡	MS24693-BB52	. . Screw	1			X
–	MS27473E16B99SC	. Connector (Electrical Harness)	1			X
–	MS27506B16-2	. Back Shell (Electrical Harness)	1			X
–	MS27488-20	. Wire Hole Filler (Electrical Harness)	13			X
–	MS27488-16	. Wire Hole Filler (Electrical Harness)	1			X
9	ECD4038-5	. Fuel Quantity Indicator (Horizon Aerospace)	1			X
–‡‡	2212000	. Clamp	1			X
–	MS28042-1A	. Clamp, Mounting (Superseded by 2212000)	1			X
–	MS35215-58	. . Screw (Used with MS28042-1A)	1			X
– ≡	MS24693-BB52	. . Screw (Used with MS28042-1A)	1			X
–	MS27473E14B15SB	. Connector (Electrical Harness)	1			X
–	MS27506B14-2	. Back Shell (Electrical Harness)	1			X
–	MS27488-20	. Wire Hole Filler (Electrical Harness)	7			X
–	MS27488-16	. Wire Hole Filler (Electrical Harness)	1			X

UNCONTROLLED COPY WHEN DOWNLOADED OR PRINTED

Visit www.enstromhelicopter.com for instructions to order an original manual and to register for email notification of updates.

FIGURE 10-4. 480B INSTRUMENT PANEL EQUIPMENT INSTALLATION

ITEM NUMBER	PART NUMBER	DESCRIPTION	QTY PER ASSY	EFFECTIVITY		
				TH-28	480	480B
10	ECD4040-5	. Transmission Oil Temperature Indicator (Horizon Aerospace)	1			X
–	MS28042-1A	. Clamp, Mounting	1			X
–	MS35215-58	. . Screw	1			X
– ≡	MS24693-BB52	. . Screw	1			X
–	MS27473E16B99SB	. Connector (Electrical Harness)	1			X
–	MS27506B16-2	. Back Shell (Electrical Harness)	1			X
–	MS27488-20	. Wire Hole Filler (Electrical Harness)	13			X
–	MS27488-16	. Wire Hole Filler (Electrical Harness)	1			X
11‡	ECD4035-5	. Engine Oil Pressure/Temperature Indicator	1			X
–	MS28042-1A	. Clamp, Mounting	1			X
–	MS35215-58	. . Screw	1			X
– ≡	MS24693-BB52	. . Screw	1			X
–	MS27473E16B99SA	. Connector (Electrical Harness)	1			X
–	MS27506B16-2	. Back Shell (Electrical Harness)	1			X
–	MS27488-20	. Wire Hole Filler (Electrical Harness)	10			X
12**	ECD4041-9	. Volt/Amp Indicator (Ahlers)	1			X
12	ECD4041-7	. Volt/Amp Indicator (Ahlers)	1			X
–	MS28042-1A	. Clamp, Mounting	1			X
–	MS35215-58	. . Screw	1			X
– ≡	MS24693-BB52	. . Screw	1			X
–	MS27473E16B99S	. Connector (Electrical Harness)	1			X
–	MS27506B16-2	. Back Shell (Electrical Harness)	1			X
–	MS27488-20	. Wire Hole Filler (Electrical Harness)	13			X
–	MS27488-16	. Wire Hole Filler (Electrical Harness)	1			X
13	PAI700	. Compass	1			X
–	327	. . Light Bulb	1			X
–	AN515B8R8	. Screw	2			X
–	AN960B8	. Washer	4			X
–	AN935B8	. Lock Washer	2			X
–	AN340-8	. Nut	2			X

UNCONTROLLED COPY WHEN DOWNLOADED OR PRINTED

Visit www.enstromhelicopter.com for instructions to order an original manual and to register for email notification of updates.

FIGURE 10-4. 480B INSTRUMENT PANEL EQUIPMENT INSTALLATION

ITEM NUMBER	PART NUMBER	DESCRIPTION	QTY PER ASSY	EFFECTIVITY		
				TH-28	480	480B
14	4196562-11	. Bracket, Compass	1			X
15	AN530-6R6	. Screw	4			X
16	14399-003	. Light Assembly (Low Rotor)	1			X
–	313	. . Light Bulb	2			X
16●	LR3-40-17-HE-81043	. Indicator LED (Rotor RPM)	1			X
-●	18-200	. . Connector Plug	1			X
-●	M39029/22-192	Contact Socket	1			X
-●	18-215	Sealing Plug	1			X
17	14399-002	. Light Assembly (Engine Out)	1			X
–	313	. . Light Bulb	2			X
17●	LR3-40-17-HE-81042	. Indicator LED (Rotor RPM)	1			X
-●	18-200	. . Connector Plug	1			X
-●	M39029/22-192	Contact Socket	1			X
-●	18-215	Sealing Plug	1			X
18	14399-001	. Light Assembly (Fire)	1			X
–	313	. . Light Bulb	2			X
18●	LR3-40-17-HE-81041	. Indicator LED (Fire)	1			X
-●	18-200	. . Connector Plug	1			X
-●	M39029/22-192	Contact Socket	1			X
-●	18-215	Sealing Plug	1			X
19	95-41-11-H6-55785	. Master Caution Annunciator/Switch	1			X
–	6839	. . Light Bulb	4			X
–	18-200	. Connector (Electrical Harness)	1			X
–	M39029/22-192	. Socket (Electrical Harness)	7			X
–	18-215	. Hole Filler (Electrical Harness)	7			X
19●	LED-41-11-HE-39062	. Indicator Switch LED (Master Caution)	1			X
20	ECD4059-5	. Annunciator Panel (Superseded by ECD4078-X)	1			X
–	327	. . Light Bulb	30			X
–	90-42130-009	. . Segment, “ENG CHIP”	1			X
–	90-42130-010	. . Segment, “MAIN XMSN CHIP”	1			X

UNCONTROLLED COPY WHEN DOWNLOADED OR PRINTED

Visit www.enstromhelicopter.com for instructions to order an original manual and to register for email notification of updates.

FIGURE 10-4. 480B INSTRUMENT PANEL EQUIPMENT INSTALLATION

ITEM NUMBER	PART NUMBER	DESCRIPTION	QTY PER ASSY	EFFECTIVITY		
				TH-28	480	480B
–	90-42130-011	. . Segment, “TAIL CHIP”	1			X
–	90-42130-012	. . Segment, “ENG OIL TEMP”	1			X
–	90-42130-013	. . Segment, “MAIN XMSN HOT”	1			X
–	90-42130-015	. . Segment, “ENG OIL PRESS”	1			X
–	90-42130-016	. . Segment, “DRIVE BRG HOT”	1			X
–	90-42130-017	. . Segment, “DC GEN”	1			X
–	90-42130-018	. . Segment, “ENG AIR INLET	1			X
–	90-42130-019	. . Segment, “SPARE” (Used when Lead Acid Battery Installed)	2			X
–	90-42130-021	. . Segment, “FUEL FILTER”	1			X
–	90-42130-022	. . Segment, “FUEL LOW”	1			X
–	90-42130-023	. . Segment, “BATTERY HOT”	1			X
–	90-42130-024	. . Segment, “BATTERY TEMP”	1			X
–	90-42130-026	. . Segment, “ENG ANTI-ICE”	1			X
–	90-42130-028	. . Segment, “MRGB PRESS”	1			X
–	AN515B6R7	. Screw	4			X
–	SD15M10JVL0	. Connector (Electrical Harness)	1			X
–	SD15F10JVL0	. Connector (Electrical Harness)	1			X
20††	ECD4078-X	. Master Caution Annunciator Panel	1			X
20†	ECD4078-1	. Annunciator Panel (Superseded by ECD4078-X)	1			X
21	MS24525-31	. Switch (Caution Panel Test/Dim)	1			X
22	7401SYZQE	. Switch (N_1-N_2-N_R-TOT Battery Bus) Larger component – on left	1			X
22A	7101SYZQE	. Switch (N_1-N_2-N_R-TOT Battery Bus) Smaller component – on right	1			X
23	4196600-11	. Ganging Bar	1			X
24≡	MS24693-S24	. Screw	1			X
25	L58D-Y24-W	. LED Light (Battery)	1			X
25	L58D-G24-W	. LED Light (Landing Light)	1			X
26*	01-0770119-15	. Post Light	1			X
27♦	ECD4093-1	. Signal Converter	1			X
–	MS35206-227	. . Screw	4			X
–	NAS1149FN616P	. . Washer	4			X
–	MS21083N06	. . Nut	4			X
28	PACMO-APZ21N	. Compass Bracket	1			X

UNCONTROLLED COPY WHEN DOWNLOADED OR PRINTED

Visit www.enstromhelicopter.com for instructions to order an original manual and to register for email notification of updates.

FIGURE 10-4. 480B INSTRUMENT PANEL EQUIPMENT INSTALLATION

ITEM NUMBER	PART NUMBER	DESCRIPTION	QTY PER ASSY	EFFECTIVITY		
				TH-28	480	480B
29	C23-805	. Deviation Card Holder	1			X
30	C23-806	. Deviation Card Protector	1			X
31	C23-807	. Compass Deviation Card	1			X
32	1-172165-9	. Pin Housing	1			X
33	170363-1	. Pin	2			X
34	CCS38-S8-C0	. Cable Clamp	1			X
35	90D030N-2	. Washer	1			X
36	MS35214-41	. Screw	1			X
37	NAS1149BN832H	. Brass Washer	2			X
38	MS35338-99	. Lock Washer	2			X
39	MS35649-286	. Brass Nut	2			X
40	MS35214-40	. Screw	1			X
41	AN931-3-5	. Grommet	1			X
42	MS35490-1	. Grommet	1			X

* Used only with installed inclinometer.

** Effectivity: S/N 5134 and subsequent.

† Effectivity S/N 5136 and subsequent. This assembly has no field replaceable parts. Installed on 480B S/N 5134, 5147, 5155, 5156, 5158 through 5163, 5173 through 5182, 5193 through 5197, 5200 through 5203, and 5206.

● Effectivity S/N 5100 and subsequent.

≡ See Appendix A for equivalent part information.

‡ Supplier can be either Ahlers or Ultra (was Horizon Aerospace).

♦ Effectivity 480B S/N 5198 and subsequent. Retrofittable to 480 S/N 5013 – 5041, 480B S/N 5042 and subsequent.

†† Effectivity 480B S/N 5198 and subsequent. Retrofittable to 480 S/N 5001 – 5041, 480B S/N 5042 and subsequent. This assembly has no field replaceable parts and is ship specific. See ECD4078 Rev B or later for layout of Annunciator Panel. Does not include 480B S/N 5134, 5147, 5155, 5156, 5158 through 5163, 5173 through 5182, 5193 through 5197, 5200 through 5203, and 5206.

‡‡ Effectivity 480B S/N 5216 and subsequent. Retrofittable to 480 S/N 5001 – 5041, 480B S/N 5042 and subsequent.

▌ Δ Effectivity: S/N 5240 and subsequent (if equipped).

▌ ¤ S/N 5157 and 5190 only.

UNCONTROLLED COPY WHEN DOWNLOADED OR PRINTED

Visit www.enstromhelicopter.com for instructions to order an original manual and to register for email notification of updates.

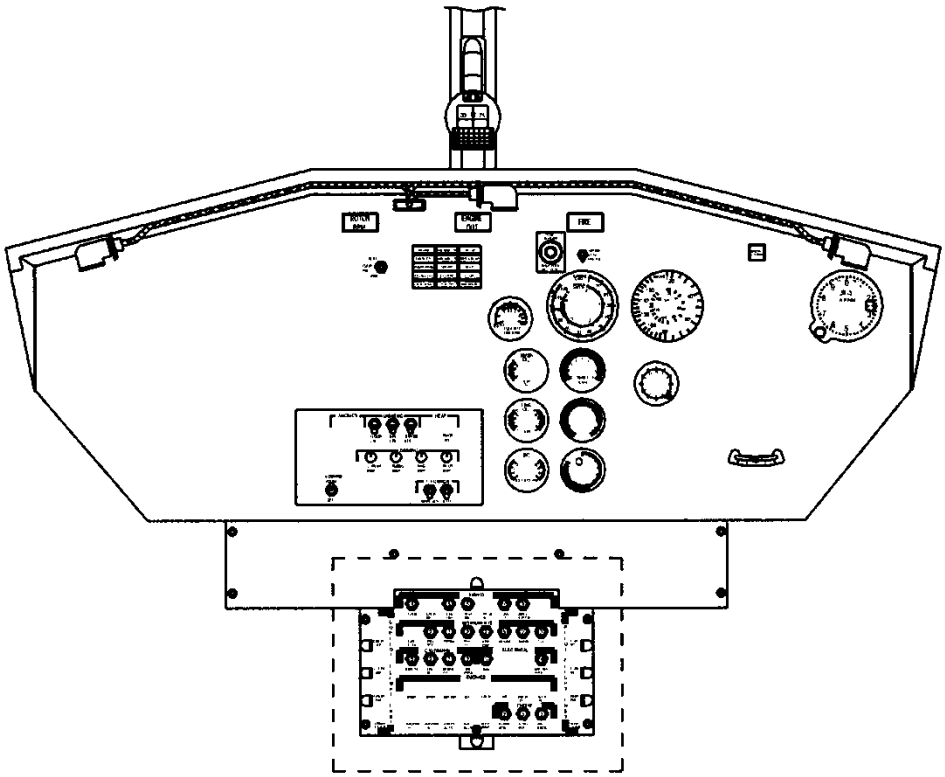

SEE DETAIL A

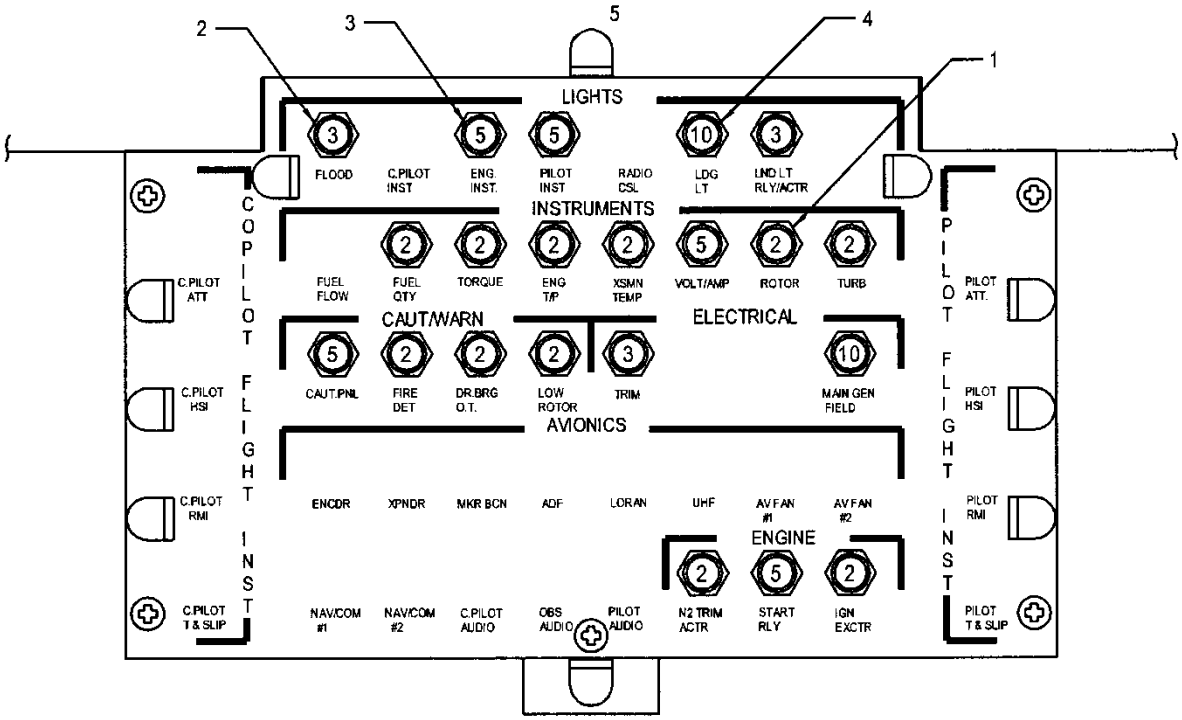

DETAIL A

Standard Equipment

FIGURE 10-5. TH-28 CIRCUIT BREAKER PANEL

UNCONTROLLED COPY WHEN DOWNLOADED OR PRINTED

Visit www.enstromhelicopter.com for instructions to order an original manual and to register for email notification of updates.

FIGURE 10-5. TH-28 CIRCUIT BREAKER PANEL

ITEM NUMBER	PART NUMBER	DESCRIPTION	QTY PER ASSY	EFFECTIVITY		
				TH-28	480	480B
1	MS26574-2	. Circuit Breaker, 2 Amp	11	X		
2	MS26574-3	. Circuit Breaker, 3 Amp	3	X		
3	MS26574-5	. Circuit Breaker, 5 Amp	5	X		
4	MS26574-10	. Circuit Breaker, 10 Amp	2	X		
5	01-0770119-15	. Post Light	10	X		
5▼	A-8970B1-327	. Post Light (Superseded by 01-0770119-15)	10	X		
–	327	. . Light Bulb	1	X		

▼ Part number not available.

UNCONTROLLED COPY WHEN DOWNLOADED OR PRINTED

Visit www.enstromhelicopter.com for instructions to order an original manual and to register for email notification of updates.

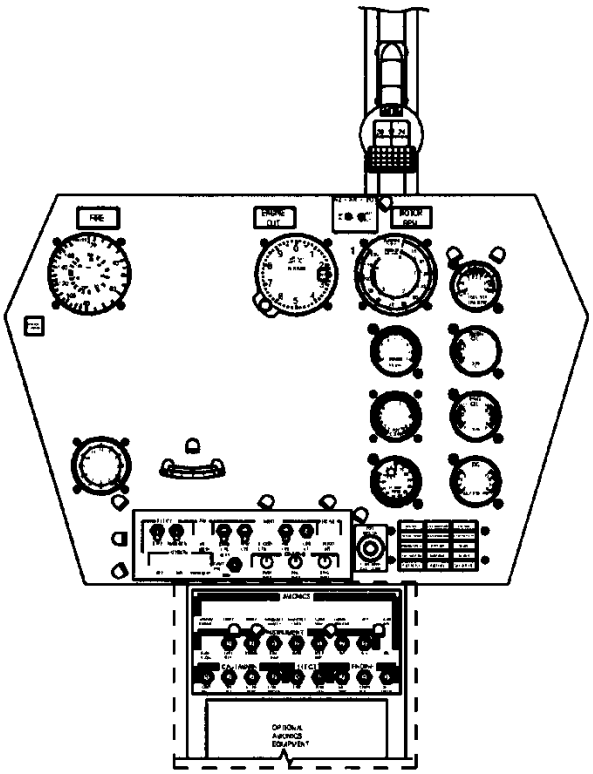

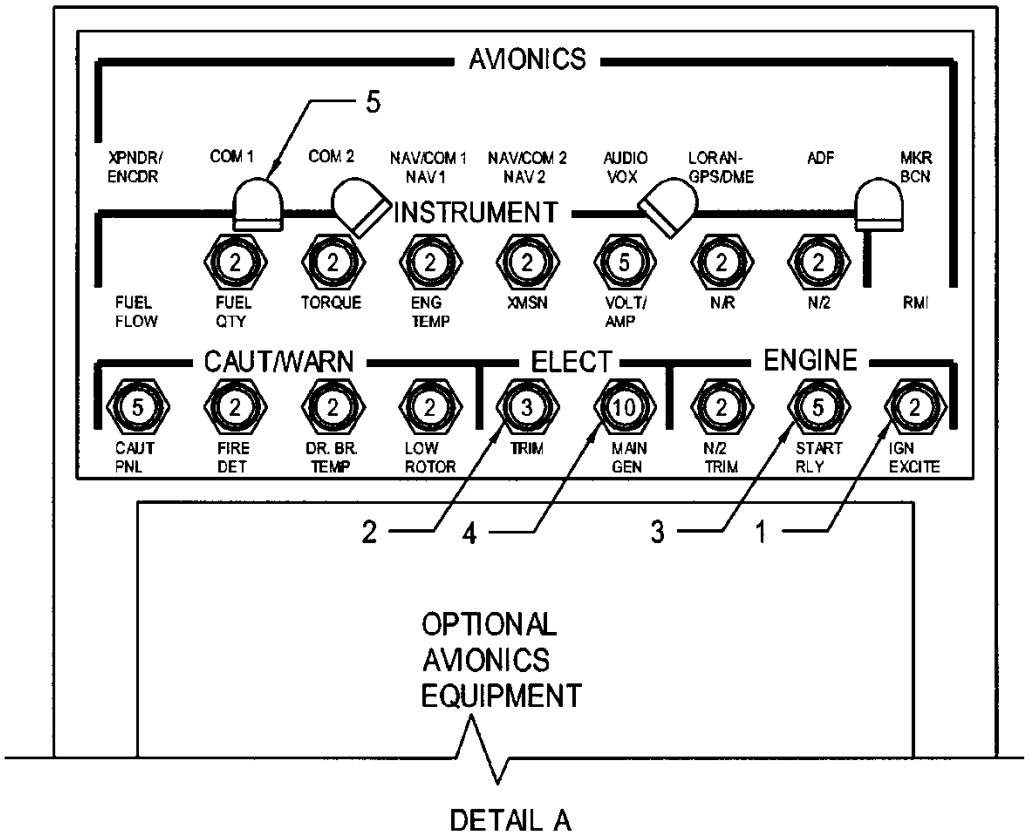

Standard Equipment

FIGURE 10-6. 480 CIRCUIT BREAKER PANEL

UNCONTROLLED COPY WHEN DOWNLOADED OR PRINTED

Visit www.enstromhelicopter.com for instructions to order an original manual and to register for email notification of updates.

FIGURE 10-6. 480 CIRCUIT BREAKER PANEL

ITEM NUMBER	PART NUMBER	DESCRIPTION	QTY PER ASSY	EFFECTIVITY		
				TH-28	480	480B
1	MS26574-2	. Circuit Breaker, 2 Amp	11		X	
2	MS26574-3	. Circuit Breaker, 3 Amp	1		X	
3	MS26574-5	. Circuit Breaker, 5 Amp	3		X	
4	MS26574-10	. Circuit Breaker, 10 Amp	1		X	
5	01-0770119-15	. Post Light	4		X	
5▼	A-8970B1-327	. Post Light (Superseded by 01-0770119-15)	4		X	
–	327	. . Light Bulb	1		X	

▼ Part number not available.

UNCONTROLLED COPY WHEN DOWNLOADED OR PRINTED

Visit www.enstromhelicopter.com for instructions to order an original manual and to register for email notification of updates.

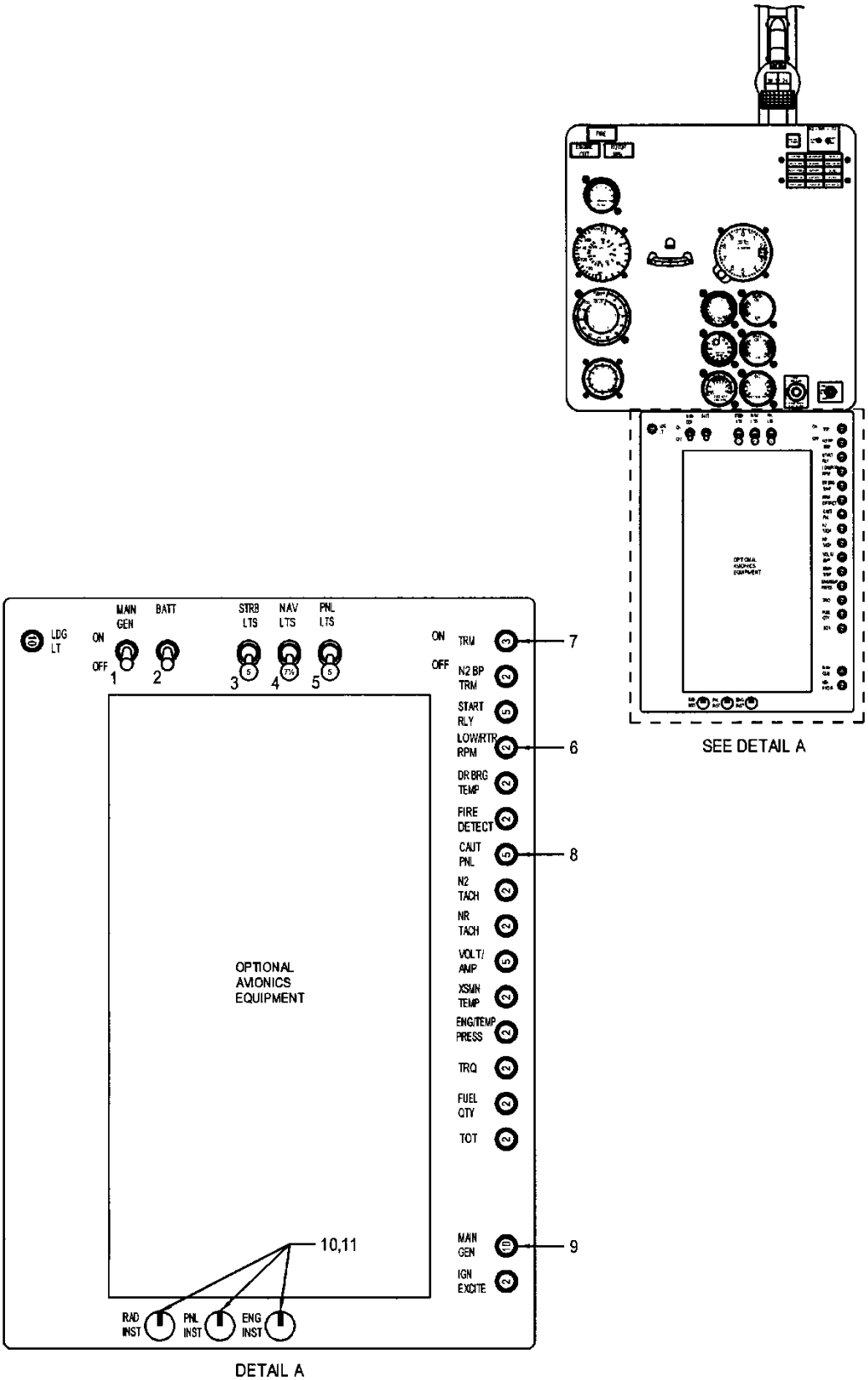

Standard Equipment

FIGURE 10-7. 480 OPTIONAL CIRCUIT BREAKER PANEL

UNCONTROLLED COPY WHEN DOWNLOADED OR PRINTED

Visit www.enstromhelicopter.com for instructions to order an original manual and to register for email notification of updates.

FIGURE 10-7. 480 OPTIONAL CIRCUIT BREAKER PANEL

ITEM NUMBER	PART NUMBER	DESCRIPTION	QTY PER ASSY	EFFECTIVITY		
				TH-28	480	480B
1	AP-1-3-50-051	. Switch (Generator)	1		X	
2	11TS15-2	. Switch (Battery)	1		X	
3	7270-1-5	. Switch/Circuit Breaker (Position Lights)	1		X	
4	7270-1-7 1/2	. Switch/Circuit Breaker (Navigation Lights)	1		X	
5	7270-1-5	. Switch/Circuit Breaker (Panel Lights)	1		X	
6	7277-5-2	. Circuit Breaker, 2 Amp	12		X	
7	7277-5-3	. Circuit Breaker, 3 Amp	1		X	
8	7277-5-1 1/2	. Circuit Breaker, 1 1/2 Amp	3		X	
9	7277-5-10	. Circuit Breaker, 10 Amp	2		X	
10 ≡	381N-500-S	. Potentiometer	3		X	
11≡	KN500B1/8	. Knob	3		X	

≡ See Appendix A for equivalent part information.

UNCONTROLLED COPY WHEN DOWNLOADED OR PRINTED

Visit www.enstromhelicopter.com for instructions to order an original manual and to register for email notification of updates.

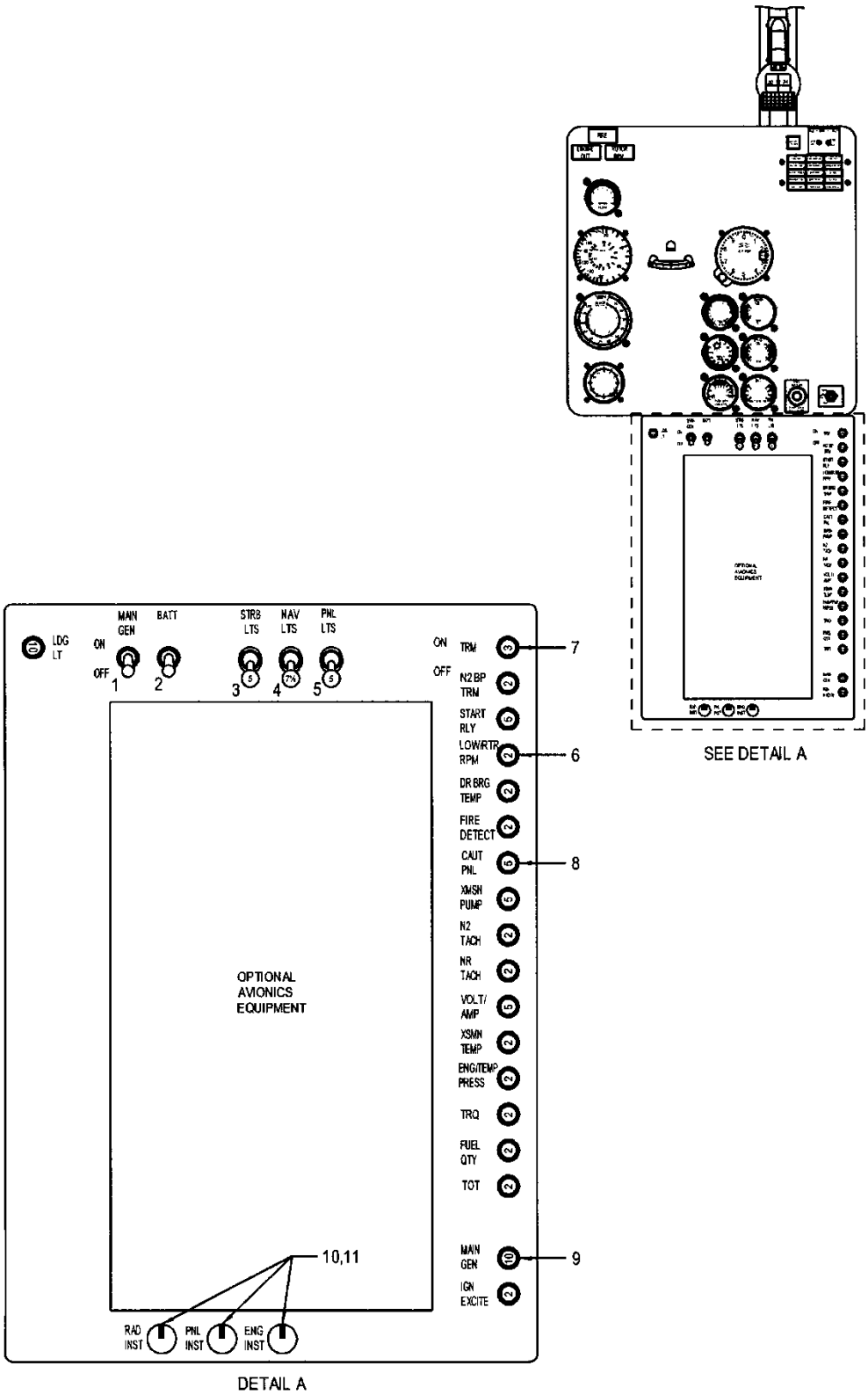

Standard Equipment
S/N: 5042 thru 5045, and 5047

FIGURE 10-8. 480B CIRCUIT BREAKER PANEL

UNCONTROLLED COPY WHEN DOWNLOADED OR PRINTED

Visit www.enstromhelicopter.com for instructions to order an original manual and to register for email notification of updates.

FIGURE 10-8. 480B CIRCUIT BREAKER PANEL

ITEM NUMBER	PART NUMBER	DESCRIPTION	QTY PER ASSY	EFFECTIVITY		
				TH-28	480	480B
1	AP-1-3-50-051	. Switch (Generator)	1			X
2	11TS15-2	. Switch (Battery)	1			X
3	7270-1-5	. Switch/Circuit Breaker (Position Lights)	1			X
4	7270-1-7 1/2	. Switch/Circuit Breaker (Navigation Lights)	1			X
5	7270-1-5	. Switch/Circuit Breaker (Panel Lights)	1			X
6	7277-5-2	. Circuit Breaker, 2 Amp	12			X
7	7277-5-3	. Circuit Breaker, 3 Amp	1			X
8	7277-5-1 1/2	. Circuit Breaker, 1 1/2 Amp	4			X
9	7277-5-10	. Circuit Breaker, 10 Amp	2			X
10 ≡	381N-500-S	. Potentiometer	3			X
11≡	KN500B1/8	. Knob	3			X

≡ See Appendix A for equivalent part information.

UNCONTROLLED COPY WHEN DOWNLOADED OR PRINTED

Visit www.enstromhelicopter.com for instructions to order an original manual and to register for email notification of updates.

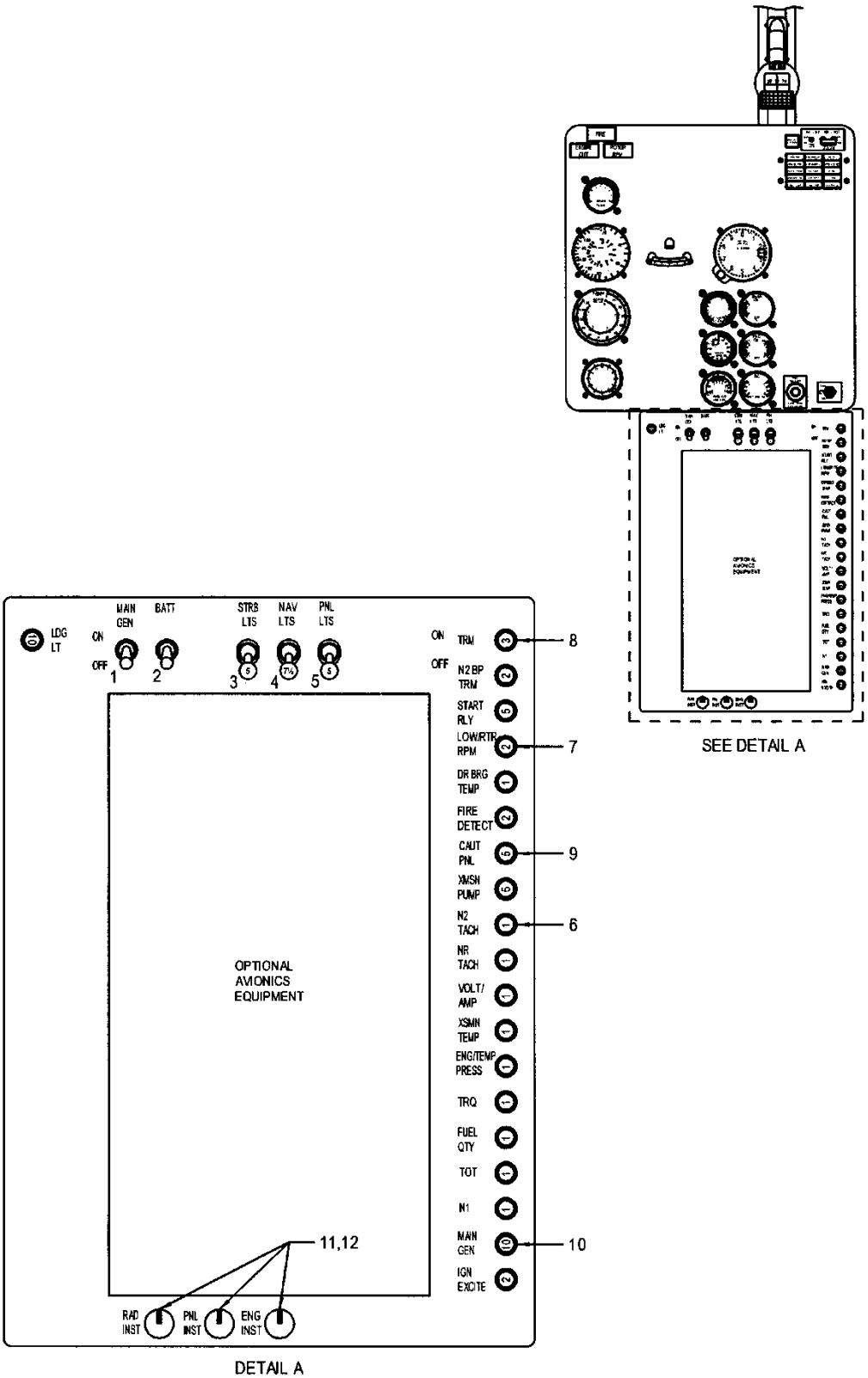

Sheet 1 of 4
Standard Equipment
S/N: 5046, 5048-5077, 5079-5084

FIGURE 10-9. 480B CIRCUIT BREAKER PANEL

UNCONTROLLED COPY WHEN DOWNLOADED OR PRINTED

Visit www.enstromhelicopter.com for instructions to order an original manual and to register for email notification of updates.

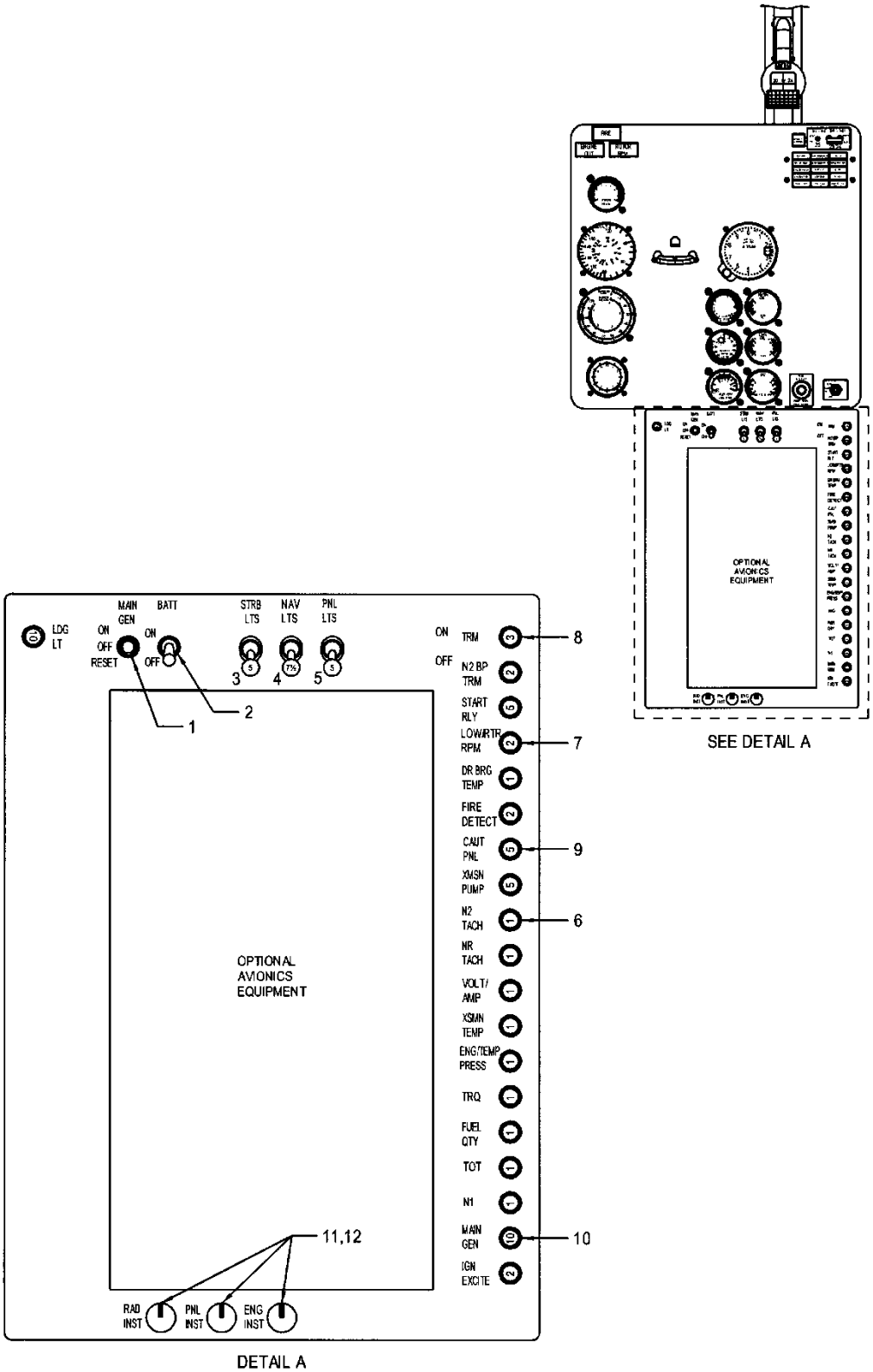

Sheet 2 of 4
Standard Equipment
S/N: 5078, 5085 through 5133, 5135

FIGURE 10-9. 480B CIRCUIT BREAKER PANEL

UNCONTROLLED COPY WHEN DOWNLOADED OR PRINTED

Visit www.enstromhelicopter.com for instructions to order an original manual and to register for email notification of updates.

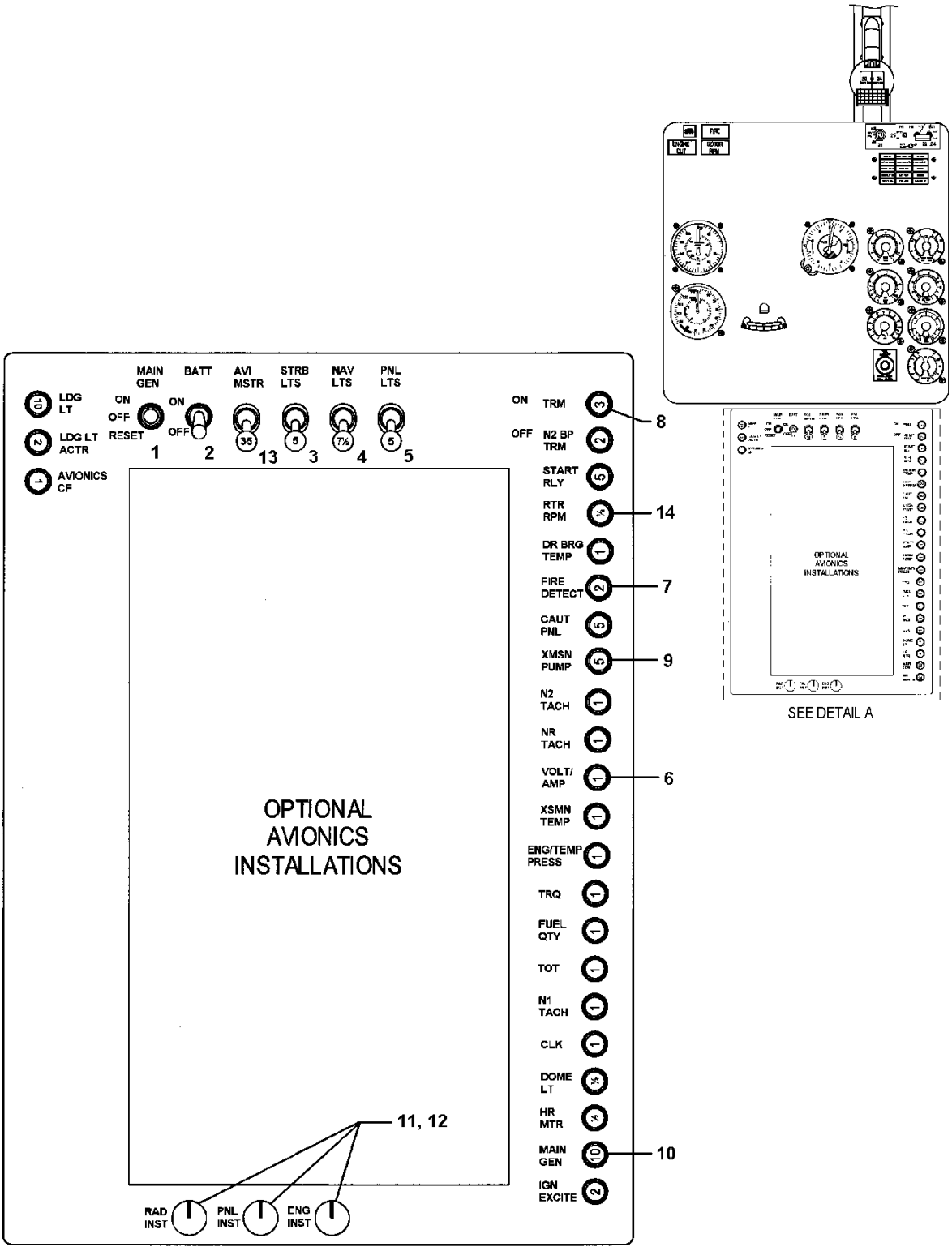

Sheet 3 of 4
Standard Equipment
S/N: 5134 and 5135

FIGURE 10-9. 480B CIRCUIT BREAKER PANEL

UNCONTROLLED COPY WHEN DOWNLOADED OR PRINTED

Visit www.enstromhelicopter.com for instructions to order an original manual and to register for email notification of updates.

FIGURE 10-9. 480B CIRCUIT BREAKER PANEL

ITEM NUMBER	PART NUMBER	DESCRIPTION	QTY PER ASSY	EFFECTIVITY		
				TH-28	480	480B
1*	AP-1-3-50-051	. Switch (Generator)	1			X
1**	MS24524-31	. Switch Generator)	1			X
2	11TS15-2	. Switch (Battery)	1			X
3	7270-1-5	. Switch/Circuit Breaker (Position Lights)	1			X
4	7270-1-7 1/2	. Switch/Circuit Breaker (Navigation Lights)	1			X
5†	7270-1-5	. Switch/Circuit Breaker (Panel Lights)	1			X
6	7277-5-1	. Circuit Breaker, 1 Amp	10			X
6‡	7277-5-1 1/2	. Circuit Breaker, 1 1/2 Amp	1			X
7	7277-5-2	. Circuit Breaker, 2 Amp	4			X
8	7277-5-3	. Circuit Breaker, 3 Amp	1			X
9	7277-5-1 1/2	. Circuit Breaker, 1 1/2 Amp	3			X
10	7277-5-10	. Circuit Breaker, 10 Amp	2			X
11 ≡	381N-500-S	. Potentiometer	3			X
12≡	KN500B1/8	. Knob	3			X
13	7270-1-35	. Switch/Circuit Breaker (Avionics Master)	1			X
14	7277-5-1/2	. Circuit Breaker, 1/2 Amp	1			X

* S/N: 5046, 5048 through 5077, 5079 through 5084

** S/N: 5078, 5085 and subsequent

† S/N: 5135 and prior

≡ See Appendix A for equivalent part information.

▌ ‡ Effectivity 480B S/N 5136 and subsequent. Retrofittable to S/N 480B S/N 5042 and subsequent.

UNCONTROLLED COPY WHEN DOWNLOADED OR PRINTED

Visit www.enstromhelicopter.com for instructions to order an original manual and to register for email notification of updates.

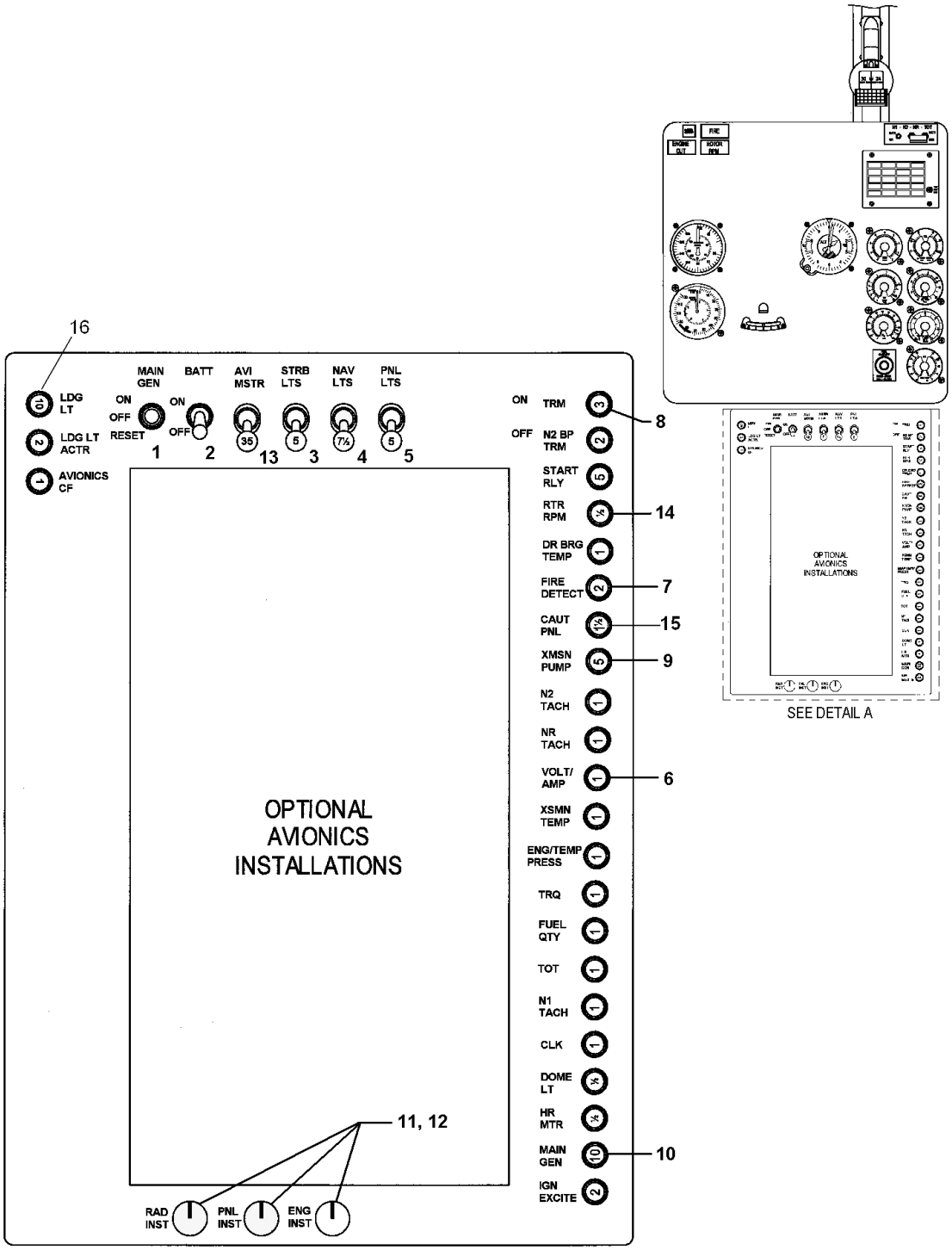

Sheet 4 of 4
Standard Equipment
S/N: 5136 and Subsequent

FIGURE 10-9. 480B CIRCUIT BREAKER PANEL

UNCONTROLLED COPY WHEN DOWNLOADED OR PRINTED

Visit www.enstromhelicopter.com for instructions to order an original manual and to register for email notification of updates.

FIGURE 10-9. 480B CIRCUIT BREAKER PANEL

ITEM NUMBER	PART NUMBER	DESCRIPTION	QTY PER ASSY	EFFECTIVITY		
				TH-28	480	480B
1	MS24524-31	. Switch (Generator)	1			X
2	11TS15-2	. Switch (Battery)	1			X
3	7270-1-5	. Switch/Circuit Breaker (Position Lights)	1			X
4	7270-1-7 1/2	. Switch/Circuit Breaker (Navigation Lights)	1			X
5	7270-1-5	. Switch/Circuit Breaker (Panel Lights)	1			X
6	7277-5-1 1/2	. Circuit Breaker, 1 1/2 Amp	1			X
7	7277-5-2	. Circuit Breaker, 2 Amp	4			X
8	7277-5-3	. Circuit Breaker, 3 Amp	1			X
9	7277-5-5	. Circuit Breaker, 5 Amp	3			X
10	7277-5-10	. Circuit Breaker, 10 Amp	2			X
11 ≡	381N500	. Potentiometer	3			X
12≡	KN500B1/8	. Knob	3			X
13	7270-1-35	. Switch/Circuit Breaker (Avionics Master)	1			X
14	7277-5-1/2	. Circuit Breaker, 1/2 Amp	1			X
15	7277-5-1 1/2	. Circuit Breaker, 1 1/2 Amp	1			X
16	7277-5-10	. Circuit Breaker, 10 Amp (Landing Light)	1			X
16	7277-5-10	. Circuit Breaker, 5 Amp (LED Landing Light)	1			X

Note: Circuit breaker locations per customer requirements.

≡ See Appendix A for equivalent part information.

UNCONTROLLED COPY WHEN DOWNLOADED OR PRINTED

Visit www.enstromhelicopter.com for instructions to order an original manual and to register for email notification of updates.

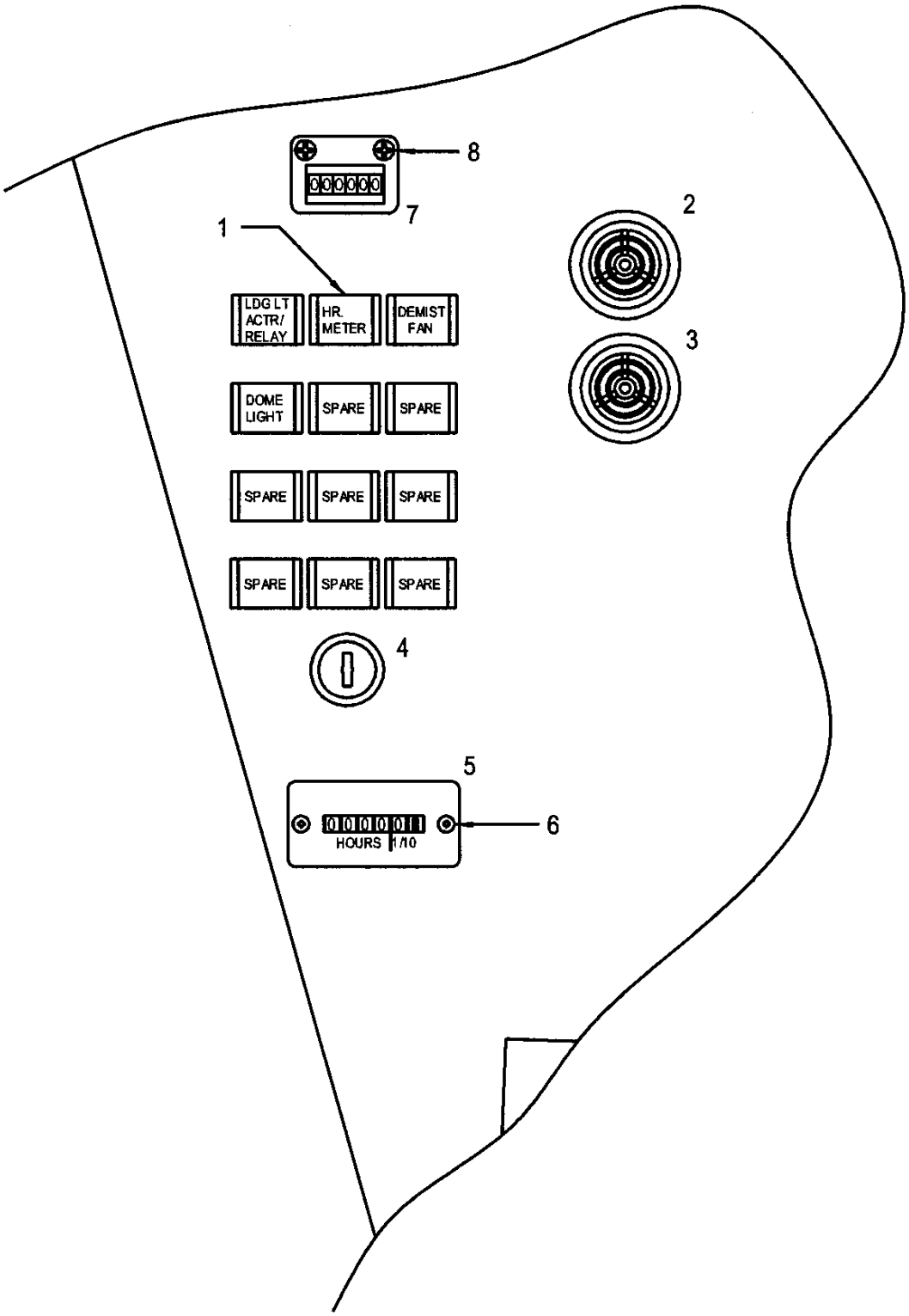

FIGURE 10-10. PEDESTAL MISCELLANEOUS EQUIPMENT

UNCONTROLLED COPY WHEN DOWNLOADED OR PRINTED

Visit www.enstromhelicopter.com for instructions to order an original manual and to register for email notification of updates.

FIGURE 10-10. PEDESTAL MISCELLANEOUS EQUIPMENT

ITEM NUMBER	PART NUMBER	DESCRIPTION	QTY PER ASSY	EFFECTIVITY		
				TH-28	480	480B
1*	286377	. Fuse Retainer	9		X	X
–**	229001	. Fuse, 1 Amp	A/R		X	X
–**	229002	. Fuse, 2 Amp	A/R		X	X
–**	229003	. Fuse, 3 Amp	A/R		X	X
–**	229007	. Fuse, 7 Amp	A/R		X	X
2	SC628DR	. Horn (Engine Out)	1		X	X
2	SC628D	. Horn (Engine Out) (Alternate)	1		X	X
3	SC628WR	. Horn (Engine Out)	1		X	X
3	SC628W	. Horn (Engine Out) (Alternate)	1		X	X
–†	SC628ANPR	. Horn (Low Rotor RPM)	1		X	X
–†	SC628ANP	. Horn (Low Rotor RPM) (Alternate)	1		X	X
4 ≡	HD6158-510-090-030	. Switch, Ignition	1		X	X
5	T14BH517BC	. Hour Meter	1		X	X
6	AN515B6R4	. Screw	2		X	X
7‡	RV8-4416	. Start Counter	1			X
8‡	AN530-6R6	. Screw	2			X

* Quantity and layout of fuse retainers will depend on installed optional equipment.

** Refer to the system schematic diagrams for specific fuse requirements.

† Located on opposite side of the pedestal.

‡ 480B S/N: 5048 and subsequent.

≡ See Appendix A for equivalent part information.

UNCONTROLLED COPY WHEN DOWNLOADED OR PRINTED

Visit www.enstromhelicopter.com for instructions to order an original manual and to register for email notification of updates.

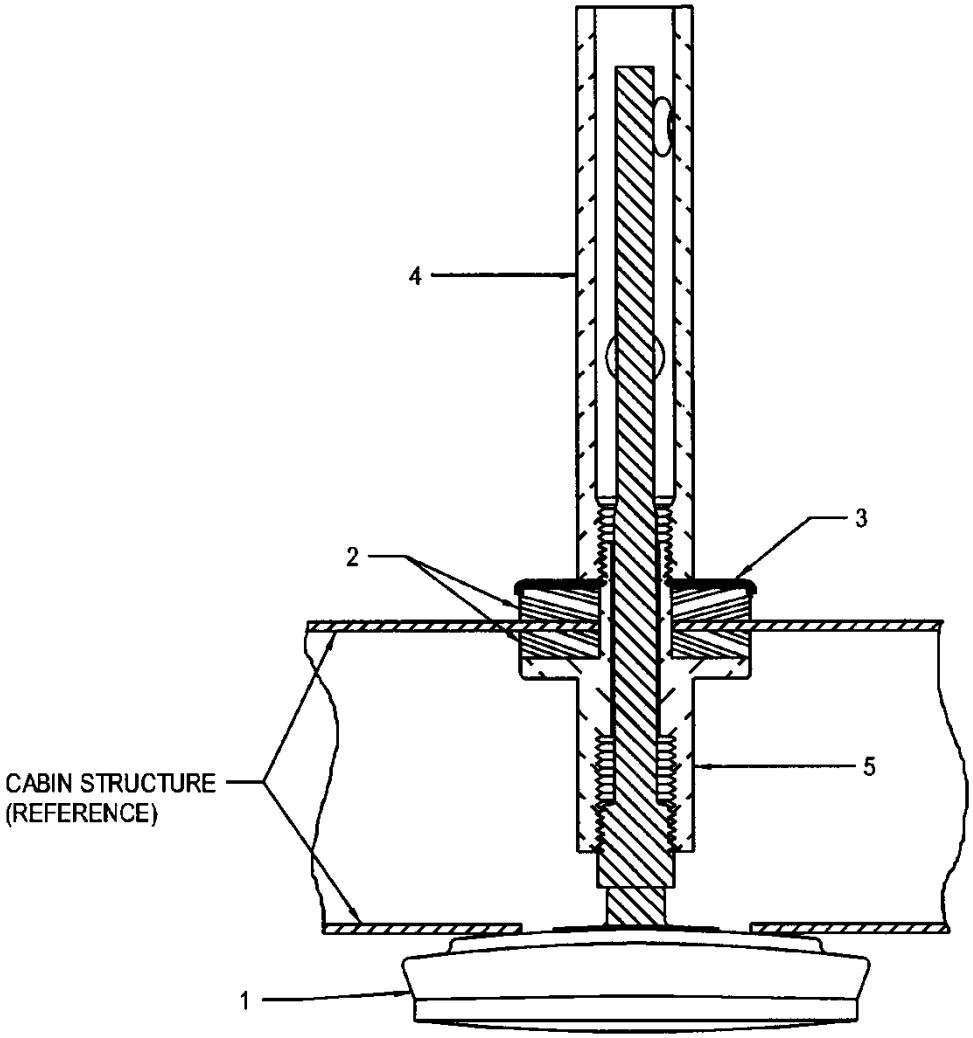

S/N: 5239 and Prior

FIGURE 10-11. OUTSIDE AIR TEMPERATURE (OAT) GAUGE INSTALLATION

UNCONTROLLED COPY WHEN DOWNLOADED OR PRINTED

Visit www.enstromhelicopter.com for instructions to order an original manual and to register for email notification of updates.

FIGURE 10-11. OUTSIDE AIR TEMPERATURE (OAT) GAUGE INSTALLATION

ITEM NUMBER	PART NUMBER	DESCRIPTION	QTY PER ASSY	EFFECTIVITY		
				TH-28	480	480B
1	4119873-11	. Temperature Gauge	1	X	X	X
2	28-41	. . Rubber Washer	2	X	X	X
3	28-125	. . Cup Washer	1	X	X	X
4	4119873-13	. . Sun Shield	1	X	X	X
5	4119840-11	. Adapter	1	X	X	X

UNCONTROLLED COPY WHEN DOWNLOADED OR PRINTED

Visit www.enstromhelicopter.com for instructions to order an original manual and to register for email notification of updates.

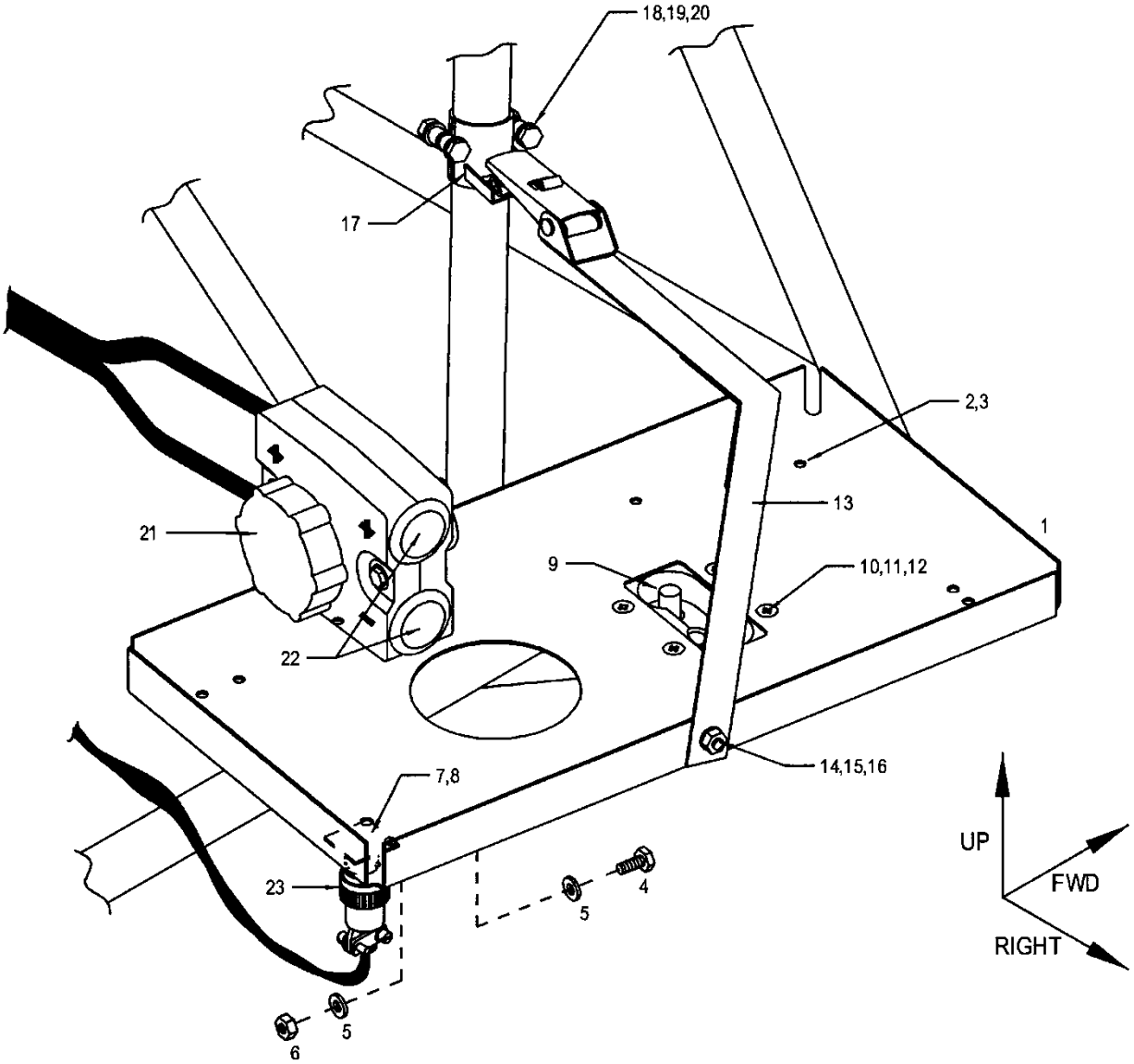

FIGURE 10-12. NICAD BATTERY TRAY INSTALLATION

UNCONTROLLED COPY WHEN DOWNLOADED OR PRINTED

Visit www.enstromhelicopter.com for instructions to order an original manual and to register for email notification of updates.

FIGURE 10-12. NICAD BATTERY TRAY INSTALLATION

ITEM NUMBER	PART NUMBER	DESCRIPTION	QTY PER ASSY	EFFECTIVITY		
				TH-28	480	480B
1	4196578-1	. Battery Tray Assembly	1	X	X	X
2	F22NA1-02	. . Nut Plate	10	X	X	X
3	MS20426AD3-3	. . Rivet	20	X	X	X
4	AN3-3A	. Bolt	4	X	X	X
5	AN960-10	. Washer	8	X	X	X
6	AN364-1032A	. Nut	4	X	X	X
7	MS3115-10A	. Receptacle	1	X	X	X
8	MS20426AD3-3	. Rivet	4	X	X	X
9	4196597-1	. Receptacle	1	X	X	X
10≡	MS24694-S54	. Screw	4	X	X	X
11	AN960-10	. Washer	4	X	X	X
12	AN364-1032A	. Nut	4	X	X	X
13*	4196579-101	. Strap Assembly	1	X	X	X
13	4196579-7	. Strap Assembly (Superseded by 4196579-101)	1	X	X	X
–	4196579-19	. . Pad	1	X	X	X
14	AN3-4A	. Bolt	1	X	X	X
15	AN960-10L	. Washer	2	X	X	X
16	AN364-1032A	. Nut	1	X	X	X
17*	4196551-3	. Clamp Assembly	1	X	X	X
17	4196551-1	. Clamp Assembly (Superseded by 4196551-3)	1	X	X	X
18	AN3-10A	. Bolt	2	X	X	X
19	AN960-10L	. Washer	4	X	X	X
20	AN364-1032A	. Nut	2	X	X	X
21	MS25182-2	. Connector	1	X	X	X
22	BPF 15/16	. Plug	2	X	X	X
23	MS3126F10-6S	. Connector (NICAD Battery Temperature)	1	X	X	X

≡ See Appendix A for equivalent part information.

* 4196579-7 and 4196551-1 are a set; 4196579-101 and 4196551-3 are a set. They are not interchangeable.

UNCONTROLLED COPY WHEN DOWNLOADED OR PRINTED

Visit www.enstromhelicopter.com for instructions to order an original manual and to register for email notification of updates.

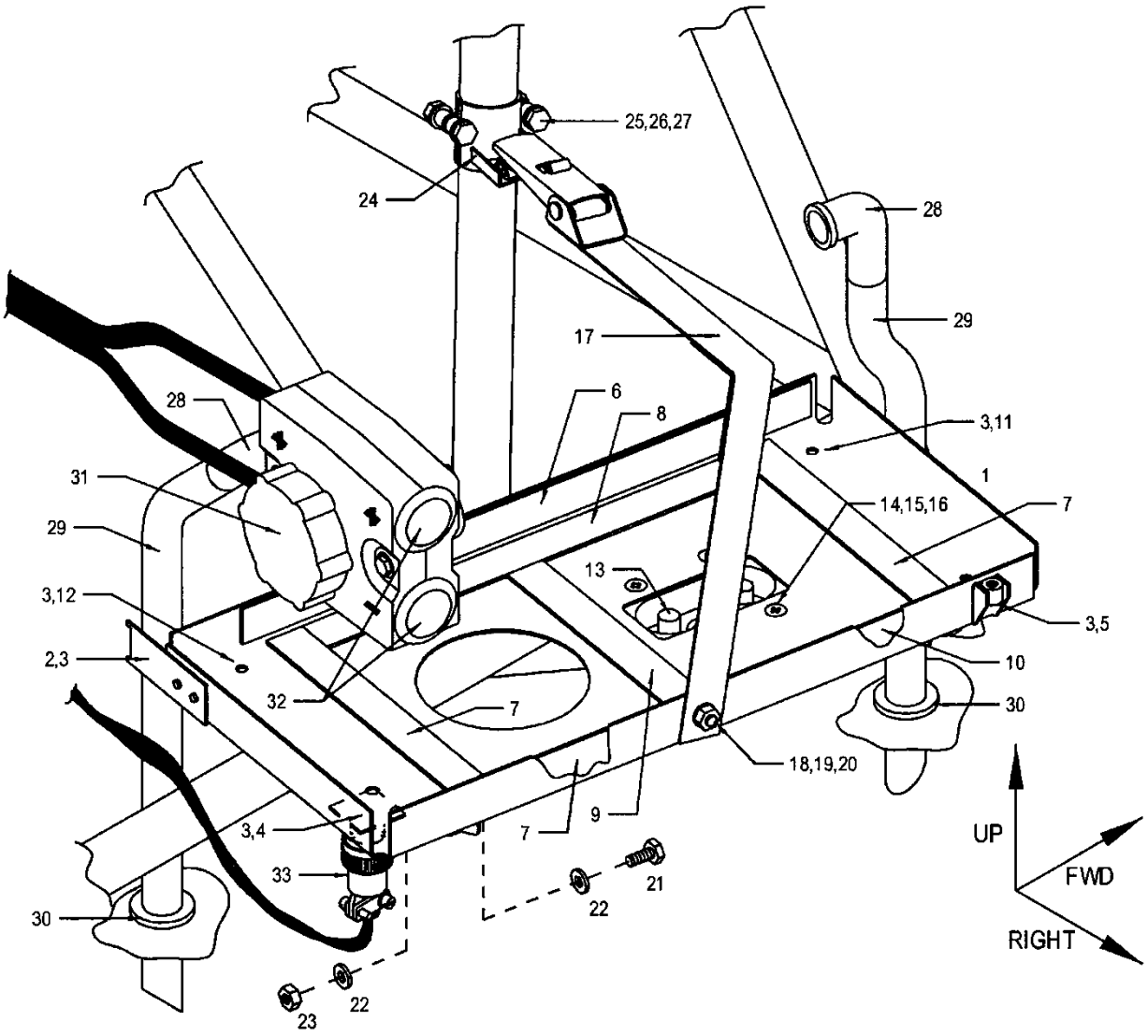

FIGURE 10-13. STANDARD BATTERY TRAY INSTALLATION

UNCONTROLLED COPY WHEN DOWNLOADED OR PRINTED

Visit www.enstromhelicopter.com for instructions to order an original manual and to register for email notification of updates.

FIGURE 10-13. STANDARD BATTERY TRAY INSTALLATION

ITEM NUMBER	PART NUMBER	DESCRIPTION	QTY PER ASSY	EFFECTIVITY		
				TH-28	480	480B
1	4196578-5	. Battery Tray Assembly	1		X	X
1	4196578-3	. Battery Tray Assembly (Superseded by 4196578-5)	1	X	X	X
2	4196579-21	. . Clip	1	X	X	X
3	MS20426AD3-3	. . Rivet	4	X	X	X
4	MS3115-10A	. . Receptacle	1	X	X	X
5	22-NA27-68-02	. . Nut Plate	1	X	X	X
5	22NA27-22-02	. . Nut Plate (Alternate)	1	X	X	X
5	NAS1033A3	. . Nut Plate (Alternate)	1	X	X	X
6	4196579-23	. . Rubber Pad	1	X	X	X
7	4196579-25	. . Rubber Pad	3	X	X	X
8	4196579-31	. . Rubber Pad	2	X	X	X
9	4196579-29	. . Rubber Pad	1	X	X	X
10	4196579-27	. . Rubber Pad	1	X	X	X
11	F22NA1-02	. . Nut Plate	5	X	X	X
12	MS21080-3	. . Nut Plate	1	X	X	X
13	4196597-1	. Receptacle	1	X	X	X
14	MS24694-S58	. Screw	4	X	X	X
14	MS24694-S54	. Screw (Superseded by MS24694-S58)	4	X	X	X
15	AN960-10	. Washer	4	X	X	X
16	AN364-1032A	. Nut	4	X	X	X
17**	4196579-9	. Strap Assembly	1		X	X
17	4196579-1	. Strap Assembly (Superseded by 4196579-9)	1	X	X	X
–	4196579-19	. . Pad	1	X	X	X
18	AN3-4A	. Bolt	1	X	X	X
19	AN960-10L	. Washer	2	X	X	X
20	AN364-1032A	. Nut	1	X	X	X
21	AN3-3A	. Bolt	4	X	X	X
22	AN960-10	. Washer	8	X	X	X
23	AN364-1032A	. Nut	4	X	X	X
24**	4196551-3	. Clamp Assembly	1	X	X	X
24	4196551-1	. Clamp Assembly (Superseded by 4196551-3)	1	X	X	X
25	AN3-10A	. Bolt	2	X	X	X
26	AN960-10L	. Washer	4	X	X	X
27	AN364-1032A	. Nut	2	X	X	X
28*	3621	. Elbow	2	X	X	X
28*	9080494	. Elbow (Replaced by 3621)	2	X	X	X
29	520-004	. Vent Hose, 1/2" ID PVC	A/R	X	X	X

UNCONTROLLED COPY WHEN DOWNLOADED OR PRINTED

Visit www.enstromhelicopter.com for instructions to order an original manual and to register for email notification of updates.

FIGURE 10-13. STANDARD BATTERY TRAY INSTALLATION

ITEM NUMBER	PART NUMBER	DESCRIPTION	QTY PER ASSY	EFFECTIVITY		
				TH-28	480	480B
30	AN931-10-20	. Grommet	2	X	X	X
31	MS25182-2	. Connector	1	X	X	X
32	BPF 15/16	. Plug	2	X	X	X
33	MS3126F10-6S	. Connector (NICAD Battery Temperature)	1	X	X	X

* Effectivity S/N 5147 and subsequent.

≡ See Appendix A for equivalent part information.

** 4196579-1 and 4196551-1 are a set; 4196579-9 and 4196551-3 are a set. They are not interchangeable.

UNCONTROLLED COPY WHEN DOWNLOADED OR PRINTED

Visit www.enstromhelicopter.com for instructions to order an original manual and to register for email notification of updates.

INTENTIONALLY LEFT BLANK

UNCONTROLLED COPY WHEN DOWNLOADED OR PRINTED

Visit www.enstromhelicopter.com for instructions to order an original manual and to register for email notification of updates.

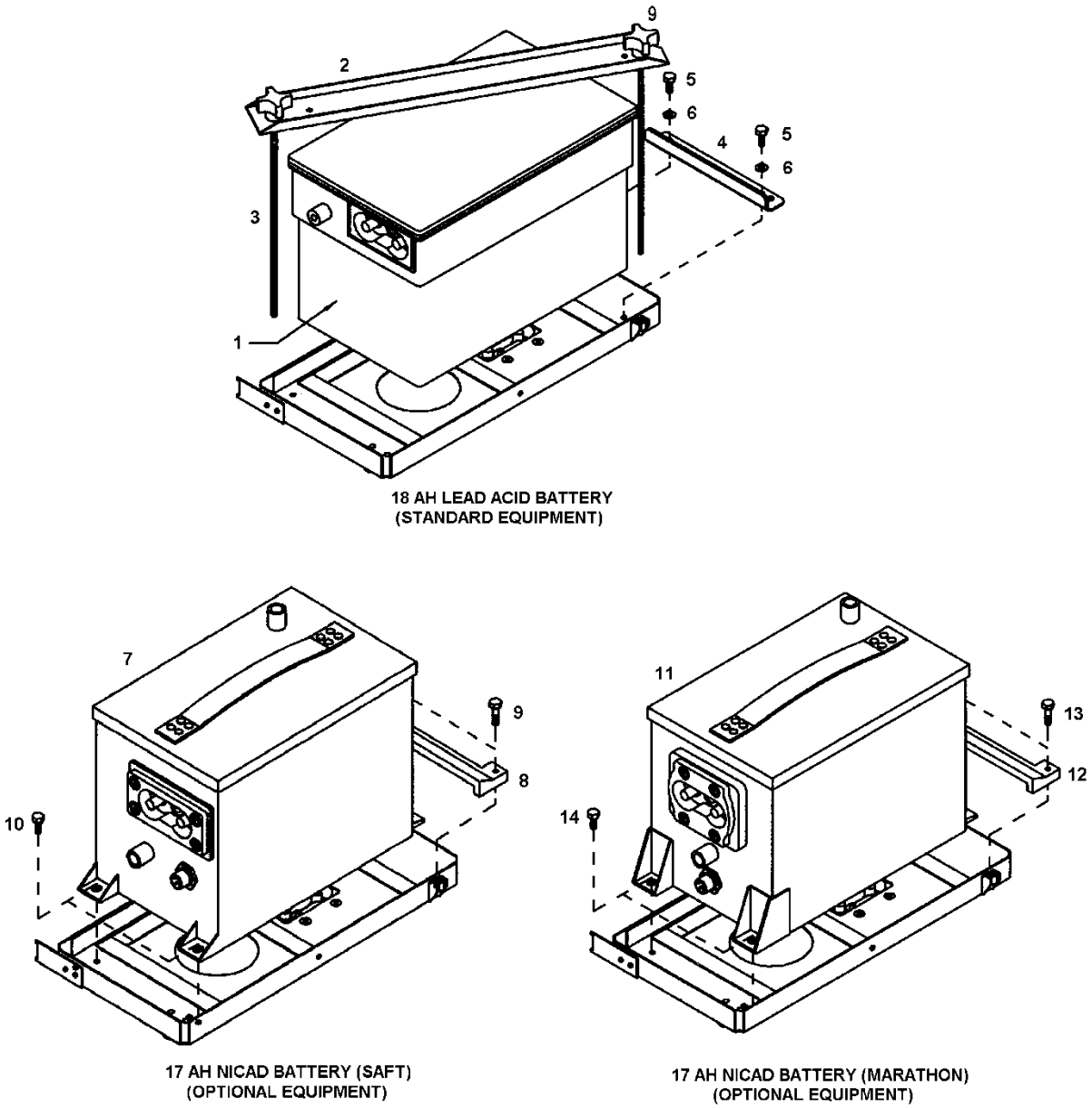

FIGURE 10-14. BATTERY INSTALLATION

UNCONTROLLED COPY WHEN DOWNLOADED OR PRINTED

Visit www.enstromhelicopter.com for instructions to order an original manual and to register for email notification of updates.

FIGURE 10-14. BATTERY INSTALLATION

ITEM NUMBER	PART NUMBER	DESCRIPTION	QTY PER ASSY	EFFECTIVITY		
				TH-28	480	480B
1	G-641	. Lead Acid Battery, 18 AH Gill	1	X	X	X
1†	7641-20	. Battery: Sealed, 24V, Lead/Acid (Alternate to G-641)	1	X	X	X
2	4196580-1	. Channel	1	X	X	X
–	4196579-31	. . Rubber Pad	2	X	X	X
3	4196569-1	. Threaded Rod Assembly	2	X	X	X
4	4196550-1	. Angle	1	X	X	X
–	4196550-17	. . Rubber Pad	1	X	X	X
5	AN3-4A	. Bolt	2	X	X	X
6	AN960-10L	. Washer	2	X	X	X
–	520-004	. Vent Hose, 5/8” ID PVC	A/R	X	X	X
–*	3621	. Elbow	2	X	X	X
–*	9080494	. Elbow (Replaced by 3621)	2	X	X	X
7	1756-2	. NICAD Battery, 17 AH Saft (Optional)	1	X	X	X
8	4196540-11	. Battery Retainer Bracket	1	X	X	X
9	AN3-6A	. Bolt	2	X	X	X
10	AN3-4A	. Bolt	2	X	X	X
11	TSP-1728	. NICAD Battery, 17 AH Marathon (Optional)	1	X	X	X
12	4196540-11	. Battery Retainer Bracket	1	X	X	X
13	AN3-6A	. Bolt	2	X	X	X
14	AN3-4A	. Bolt	2	X	X	X

* Effectivity S/N 5147 and subsequent.

† Effectivity 480B S/N 5158 and subsequent. Retrofittable to 480 S/N 5001 to 5041 and 480B S/N 5042 and subsequent.

UNCONTROLLED COPY WHEN DOWNLOADED OR PRINTED

Visit www.enstromhelicopter.com for instructions to order an original manual and to register for email notification of updates.

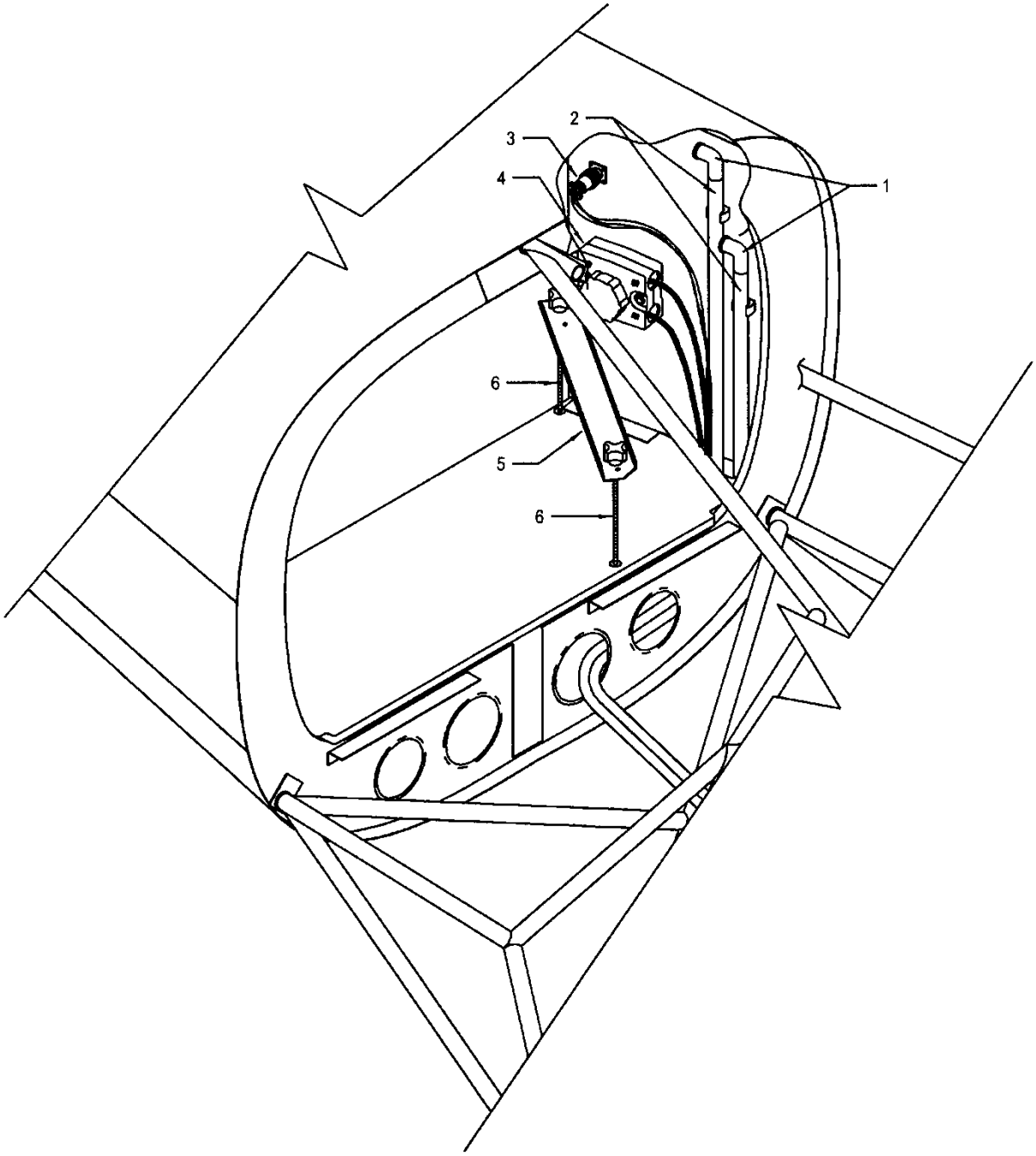

FIGURE 10-15. AFT BATTERY INSTALLATION

UNCONTROLLED COPY WHEN DOWNLOADED OR PRINTED

Visit www.enstromhelicopter.com for instructions to order an original manual and to register for email notification of updates.

FIGURE 10-15. AFT BATTERY INSTALLATION

ITEM NUMBER	PART NUMBER	DESCRIPTION	QTY PER ASSY	EFFECTIVITY		
				TH-28	480	480B
1**	3621	. Elbow	2	X	X	X
1	9080494	. Elbow (Replaced by 3621)	2	X	X	X
2	520-004	. Vent Hose, 1/2" ID PVC	A/R	X	X	X
–	SST1.5I-MP	. Cable Tie	A/R	X	X	X
3	MS3126F10-6S	. Connector (NICAD Battery Temperature)	1	X	X	X
4	MS25182-2	. Connector	1	X	X	X
–*	BPF 15/16	. Plug	2	X	X	X
5	4196580-1	. Channel	1	X	X	X
–	4196579-31	. . Rubber Pad	2	X	X	X
6	4196569-1	. Threaded Rod Assembly	2	X	X	X

* Refer to Figure 10-11, Item 32.

** Effectivity S/N 5147 and subsequent.

UNCONTROLLED COPY WHEN DOWNLOADED OR PRINTED

Visit www.enstromhelicopter.com for instructions to order an original manual and to register for email notification of updates.

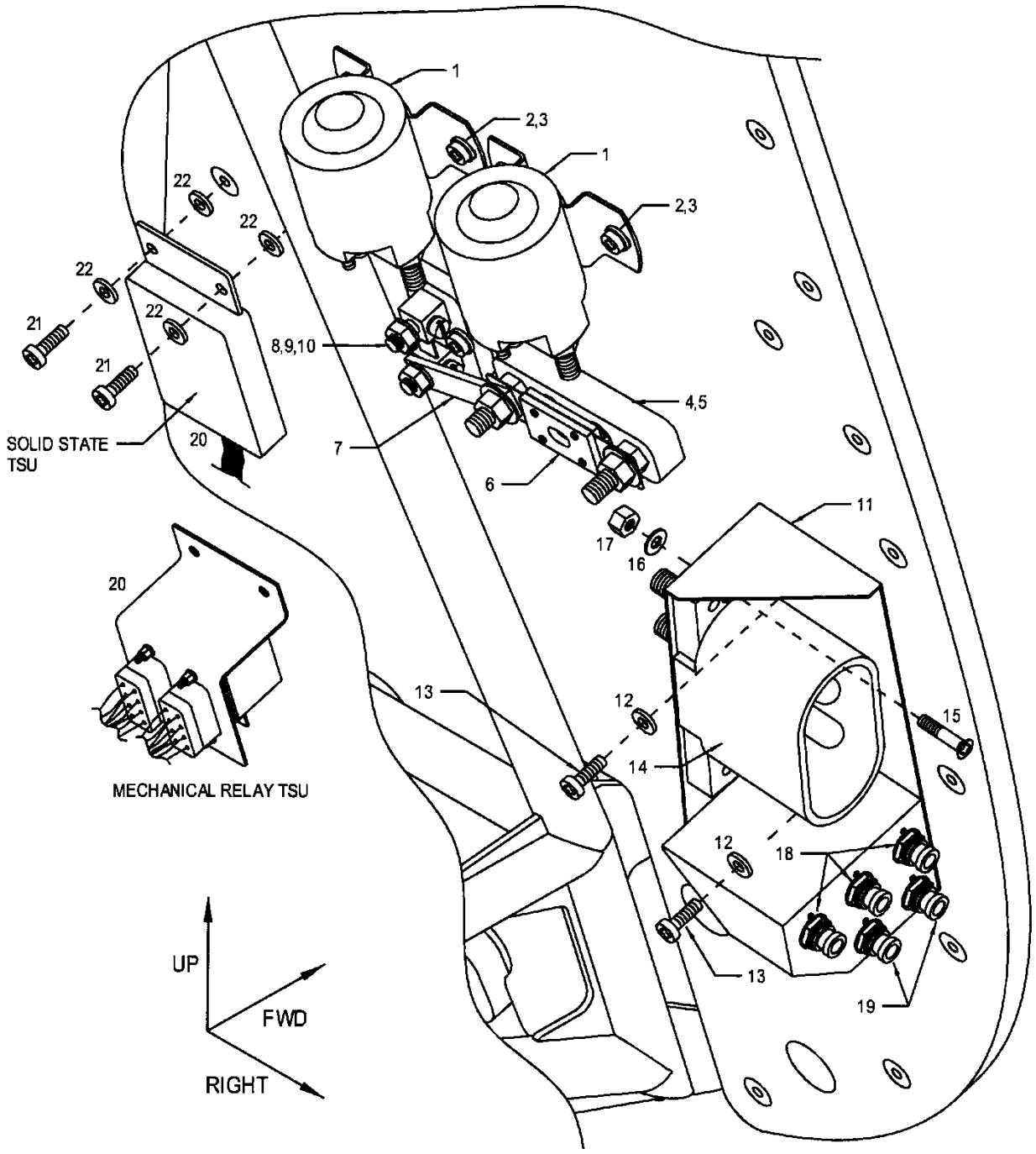

480, S/N 5001 thru 5131

FIGURE 10-16. ELECTRICAL COMPONENT INSTALLATION (RIGHT SIDE BACKWALL)

UNCONTROLLED COPY WHEN DOWNLOADED OR PRINTED

Visit www.enstromhelicopter.com for instructions to order an original manual and to register for email notification of updates.

FIGURE 10-16. ELECTRICAL COMPONENT INSTALLATION (RIGHT SIDE BACKWALL)

ITEM NUMBER	PART NUMBER	DESCRIPTION	QTY PER ASSY	EFFECTIVITY		
				TH-28	480	480B
1	ECD075-13	. Relay	2	X	X	X
1‡	ECD075-15	. Relay	2			X
1◦	6-1616945-7	. Relay	2		X	X
2	MS27039-1-11	. Screw	4	X	X	
3	AN960C10	. Washer	4	X	X	X
4	4164	. Fuse Block	1	X	X	X
5≡	MS24694-S55	. Screw	2	X	X	X
6≡	ANL-100	. Limiter	1	X	X	X
7	4199052-11	. Bus	1	X	X	X
8	22-370-150	. Shunt	1	X	X	X
9	MS27039-1-11	. Screw	2	X	X	X
10	AN960C10	. Washer	2	X	X	X
11	4196555-5	. Bracket Assembly	1	X	X	X
11*	4196555-7	. Bracket Assembly	1			X
11◦◦	4196555-9	. Bracket Assembly	1			X
12	AN960-10L	. Washer	2	X	X	X
13	MS27039-1-09	. Screw	2	X	X	X
14	AN2552-3A	. Receptacle	1	X	X	X
15≡	MS24694-S56	. Screw	2	X	X	X
16	AN960-10	. Washer	2	X	X	X
17	AN365-1032A	. Nut	2	X	X	X
18** ♦♦	MS26574-2	. Circuit Breaker, 2 Amp	2	X	X	
18† ♦♦	MS26574-2	. Circuit Breaker, 2 Amp	3		X	X
18* ♦♦	MS26574-1	. Circuit Breaker, 1 Amp	4			X
19♦♦	MS26574-5	. Circuit Breaker, 5 Amp	2	X	X	X
19* ♦ ♦♦	MS26574-1	. Circuit Breaker, 1 Amp	3			X
20●	4199059-3	. Trim Switch Unit (Mechanical Relay)	2	X	X	X
–	M12883/41-14	. . Socket	2	X	X	X
–	J-D4N-300M	. . Relay	2	X	X	X
–	M83536/10-024M	. . Relay (Superseded by J-D4N-300M)	2	X	X	X
20●●	4199059-1	. Trim Switch Unit (Solid State) (Obsolete)	2	X	X	X
20●●	4192102-4	. Trim Switch Unit (Solid State) (Obsolete)	2	X	X	X
20●●	4192102-903	. Trim Switch Unit (Solid State) (Obsolete)	2	X	X	X
21	MS27039-1-09	. Screw	4	X	X	X
22	AN960PD10	. Washer	8	X	X	X

UNCONTROLLED COPY WHEN DOWNLOADED OR PRINTED

Visit www.enstromhelicopter.com for instructions to order an original manual and to register for email notification of updates.

*	480B S/N: 5046, 5048 and subsequent.
**	TH-28 and 480 with Standard Panel
†	480 with Optional Panel, 480B with Standard or Optional Panel (S/N 5042 thru 5045 and 5047)
‡	480B S/N 5078, 5085 thru 5131.
●	480B S/N 5087 and subsequent.
●●	The solid state trim switch units are no longer available. Order Trim Relay Kit, P/N 4230028-5, to install the mechanical relay trim switch units.
◦	Relay kit 4230040, retrofittable for 480/480B S/N 5001 thru 5131.
◦◦	Effectivity 5136 and subsequent.
♦	Quantity 2 for 5135 and prior.
♦♦	Quantity and location of circuit breakers are per customer requirements.
≡	See Appendix A for equivalent part information.

UNCONTROLLED COPY WHEN DOWNLOADED OR PRINTED

Visit www.enstromhelicopter.com for instructions to order an original manual and to register for email notification of updates.

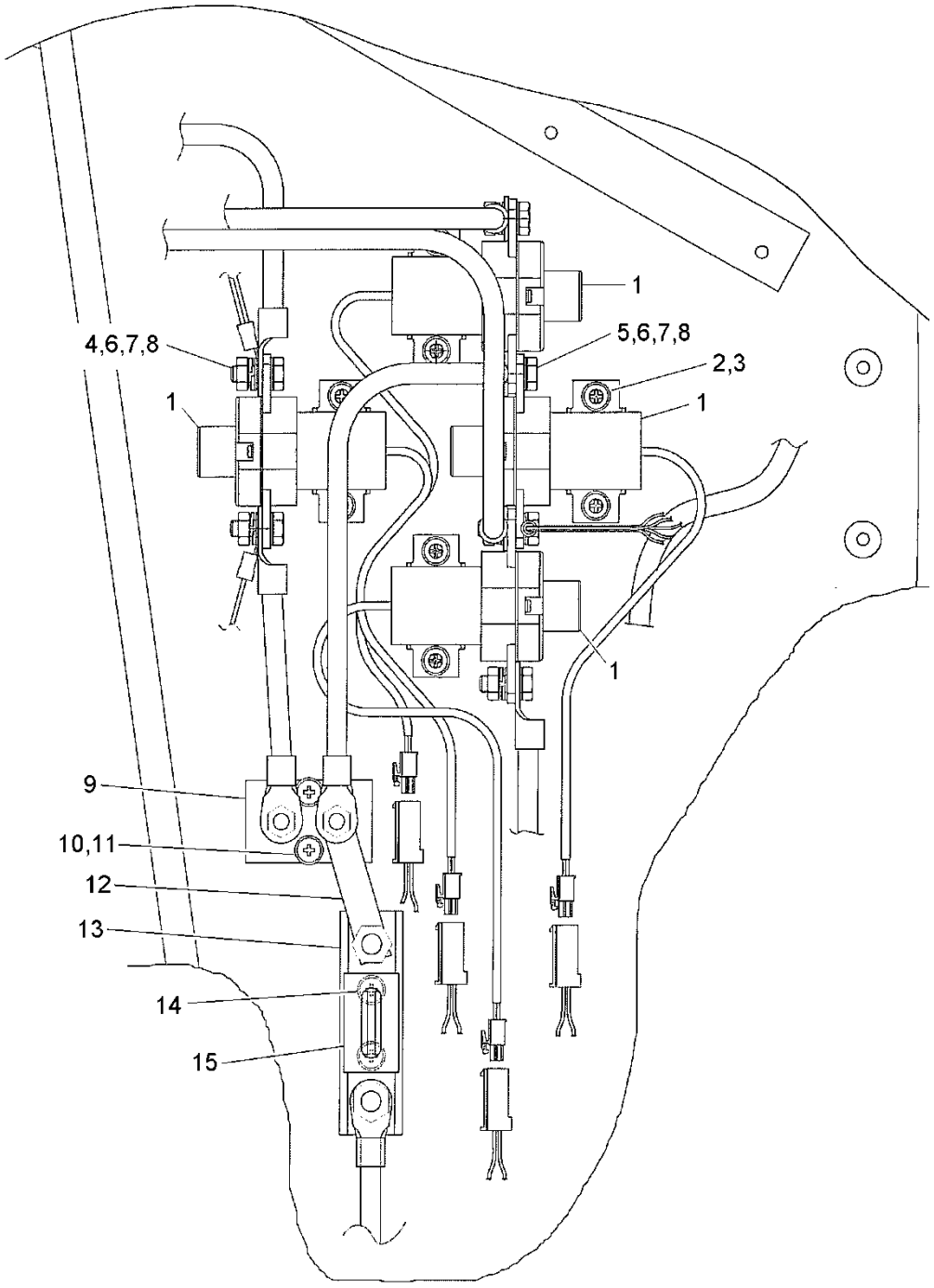

Sheet 1 of 2
S/N 5132 through 5133

FIGURE 10-17. ELECTRICAL COMPONENT INSTALLATION
(RIGHT SIDE BACKWALL)

UNCONTROLLED COPY WHEN DOWNLOADED OR PRINTED

Visit www.enstromhelicopter.com for instructions to order an original manual and to register for email notification of updates.

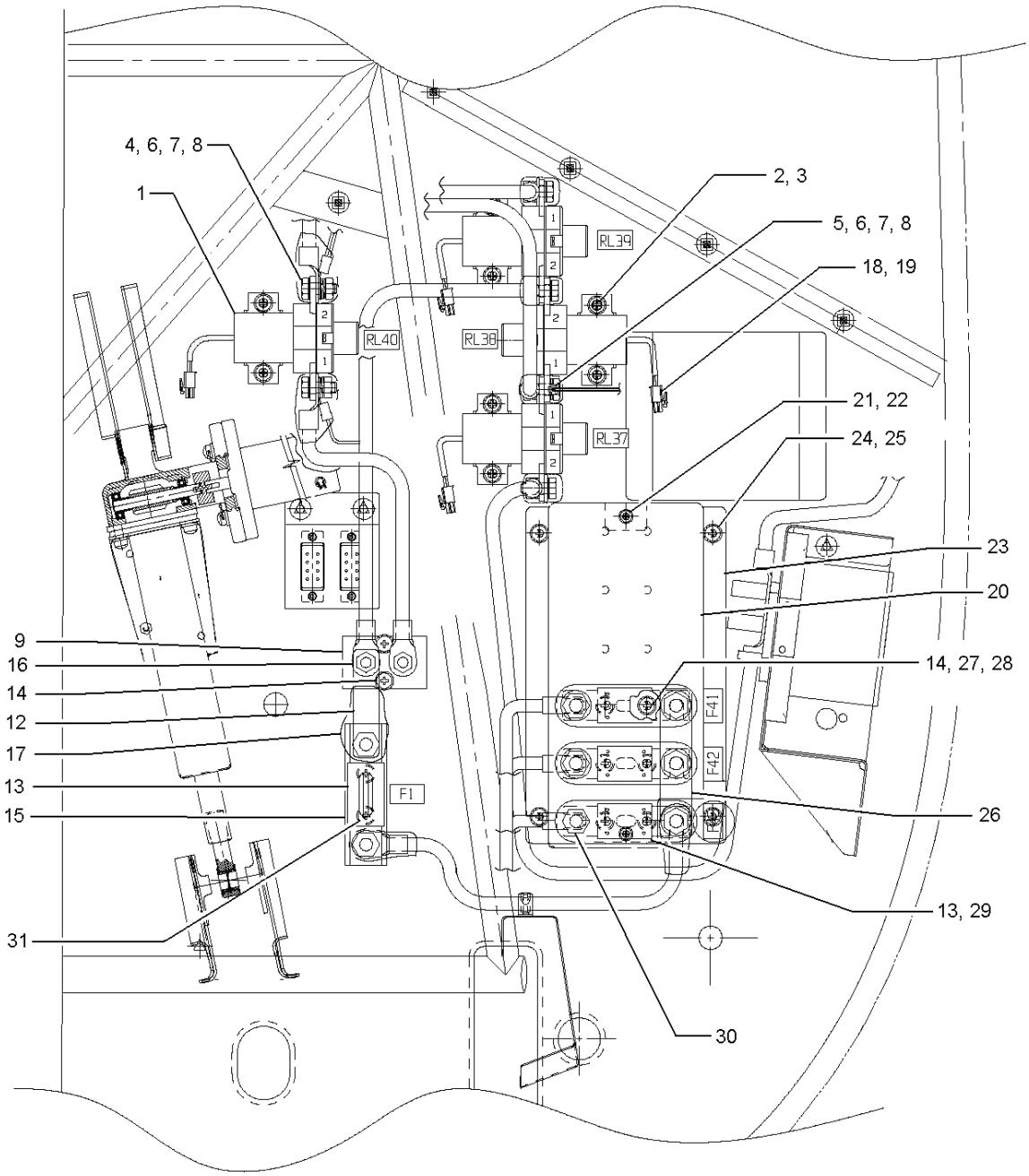

Sheet 2 of 2
S/N 5134 and subsequent

FIGURE 10-17. ELECTRICAL COMPONENT INSTALLATION
(RIGHT SIDE BACKWALL)

UNCONTROLLED COPY WHEN DOWNLOADED OR PRINTED

Visit www.enstromhelicopter.com for instructions to order an original manual and to register for email notification of updates.

FIGURE 10-17. ELECTRICAL COMPONENT INSTALLATION (RELAYS ONLY)
(RIGHT SIDE BACKWALL)

ITEM NUMBER	PART NUMBER	DESCRIPTION	QTY PER ASSY	EFFECTIVITY		
				TH-28	480	480B
1	6-1616945-7	. Relay	4		X	X
2	MS27039-1-08	. Screw	8		X	X
3	AN960-10	. Washer	8		X	X
4	AN4C5A	. Bolt	4		X	X
5	AN4C6A	. Bolt	2		X	X
6	AN960C416L	. Washer	12		X	X
7	MS35338-139	. Lock Washer	6		X	X
8	AN315C4R	. Nut	6		X	X
9	22-370-150	. Shunt	1		X	X
9*	22-370-200	. Shunt	1		X	X
10	MS27039-1-11	. Screw	2		X	X
11	AN960-10L	. Washer	2		X	X
12	4199042-11	. Bus	1		X	X
12*	4199042-13	. Bus	1		X	X
13**	4164	. Fuse Block	3		X	X
14**	AN507-1032R14	. Screw	8		X	X
15≡	ANL-100	. Low Voltage Limiter	1		X	X
15* ≡	ANL-150	. Low Voltage Limiter	1		X	X
16	AN960C416L	. Washer	1		X	X
17	MS21571-2S	. Nipple	2		X	X
18†	172233-1	. Housing	4		X	X
18	1-72165-9	. Housing (Superseded by 172233-1)	4		X	X
19†	170364-1	. Pin	8		X	X
19	170363-1	. Pin (Superseded by 170364-1)	8		X	X
20●	4114039-15	. Cover, Hat Channels	1		X	X
20	4114039-11	. Cover (Superseded by 4114039-15)	1		X	X
21	8x1/2	. Screw	2		X	X
22	AN960-8L	. Washer	2		X	X
23	4114037-1	. Hat Channel Assembly	1		X	X
24	MS27039-1-07	. Screw	4		X	X
25	AN960-10L	. Washer	4		X	X
26	4199042-27	. Bus	1		X	X
27	AN364-1032A	. Nut	6		X	X
28	AN960D10L	. Washer	6		X	X
29≡	ANL-35	. Low Voltage Limiter	3		X	X
30	AN960C516L	. Washer	8		X	X
31≡	MS24693-S275	. Screw	2		X	X

UNCONTROLLED COPY WHEN DOWNLOADED OR PRINTED

Visit www.enstromhelicopter.com for instructions to order an original manual and to register for email notification of updates.

*	Effectivity S/N 5134 and subsequent.
**	4164 quantity 1 and AN507-1032R14 quantity 2 for S/N 5133 and earlier.
≡	See Appendix A for equivalent part information.
•	Effectivity 480B S/N 5171 and subsequent. Retrofittable to 480 S/N 5001 to 5041 and 480B S/N 5042 and subsequent.
†	Effective 480B S/N 5192 and subsequent. Retrofittable to 480 S/N 5001 – 5041 and 480B S/N 5042 and subsequent.

UNCONTROLLED COPY WHEN DOWNLOADED OR PRINTED

Visit www.enstromhelicopter.com for instructions to order an original manual and to register for email notification of updates.

INTENTIONALLY LEFT BLANK

UNCONTROLLED COPY WHEN DOWNLOADED OR PRINTED

Visit www.enstromhelicopter.com for instructions to order an original manual and to register for email notification of updates.

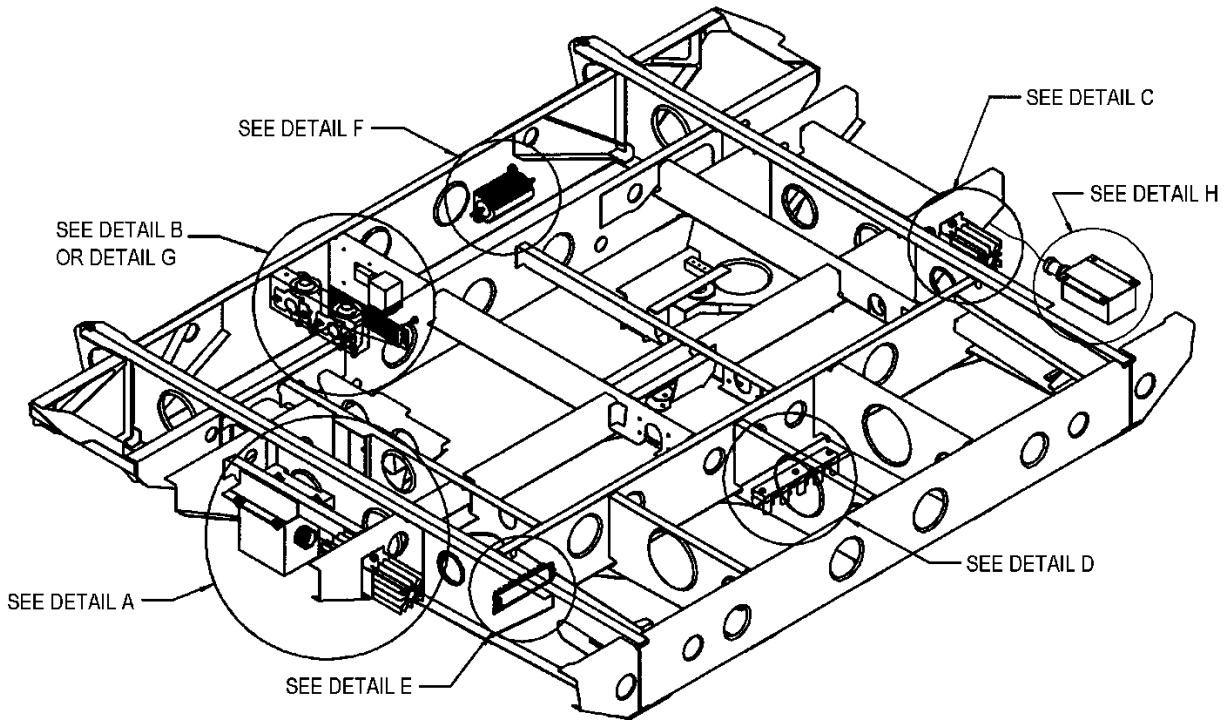

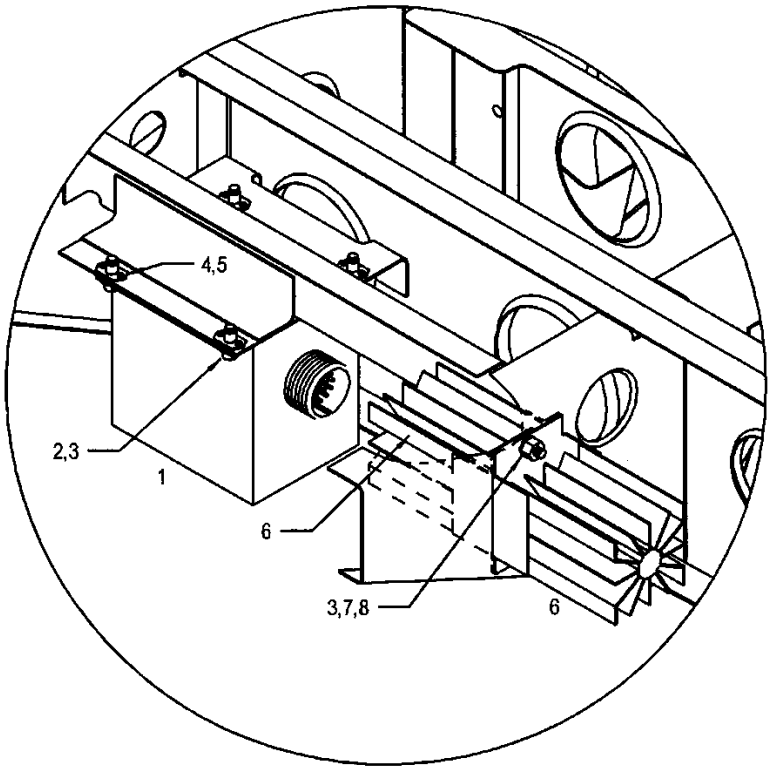

DETAIL A

Sheet 1 of 3

FIGURE 10-18. ELECTRICAL COMPONENTS - KEEL INSTALLATION

UNCONTROLLED COPY WHEN DOWNLOADED OR PRINTED

Visit www.enstromhelicopter.com for instructions to order an original manual and to register for email notification of updates.

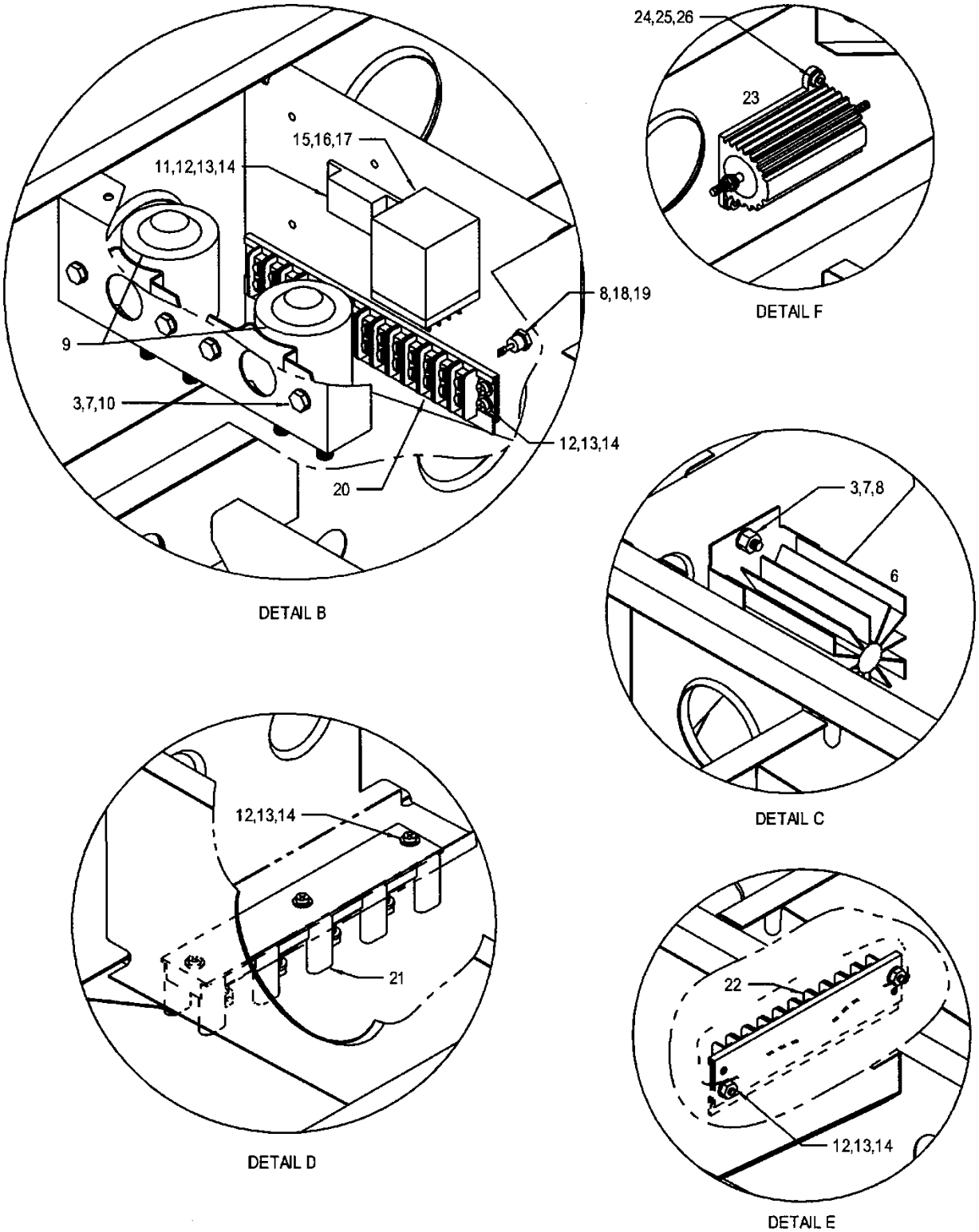

Sheet 2 of 3

FIGURE 10-18. ELECTRICAL COMPONENTS - KEEL INSTALLATION

UNCONTROLLED COPY WHEN DOWNLOADED OR PRINTED

Visit www.enstromhelicopter.com for instructions to order an original manual and to register for email notification of updates.

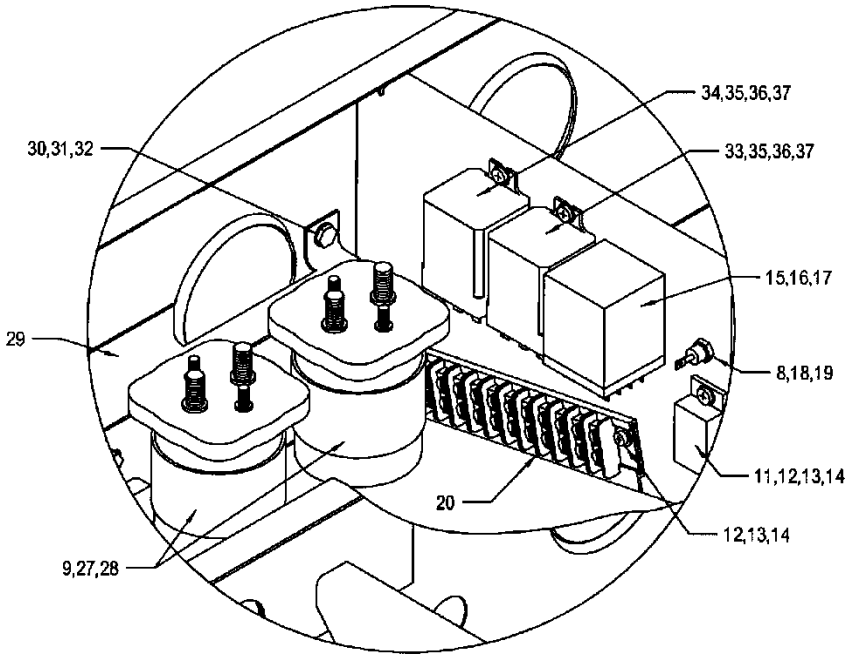

DETAIL G

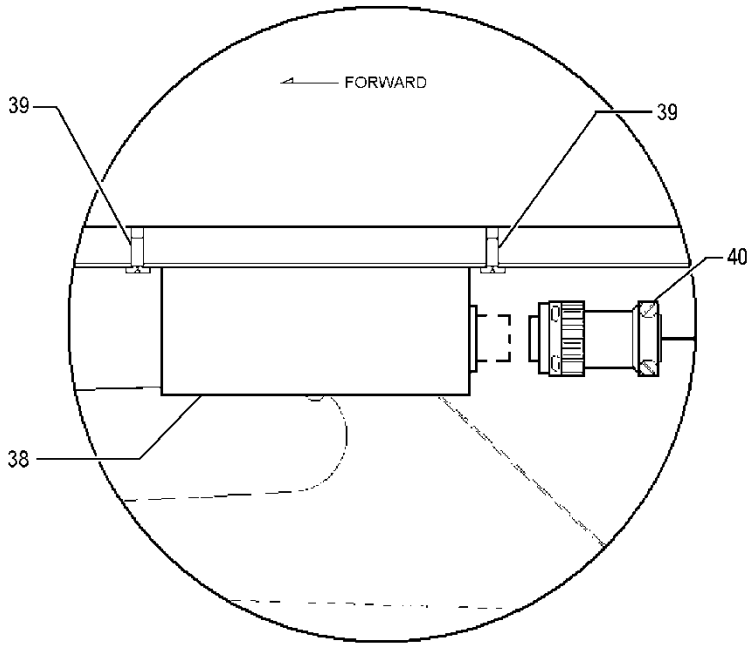

DETAIL H (INBOARD VIEW)
S/N 5134, 5136 AND SUBSEQUENT

Sheet 3 of 3

FIGURE 10-18. ELECTRICAL COMPONENTS - KEEL INSTALLATION

UNCONTROLLED COPY WHEN DOWNLOADED OR PRINTED

Visit www.enstromhelicopter.com for instructions to order an original manual and to register for email notification of updates.

FIGURE 10-18. ELECTRICAL COMPONENTS - KEEL INSTALLATION

ITEM NUMBER	PART NUMBER	DESCRIPTION	QTY PER ASSY	EFFECTIVITY		
				TH-28	480	480B
1* †	VR1528-11B	. Generator Control Unit (GCU)	1	X	X	X
–	CA3106F20-29SF80	. Connector (J47) (Used with VR1528-11B)	1	X	X	X
1 ‡ ≡	GCSG501-2	. Generator Control Unit (GCU)	1			X
–	MS3476L20-16S	. Connector (J47) (Used with GCSG 501-2)	1			X
2	NAS1351C3H8	. Screw	4	X	X	X
3	AN960D10	. Washer	20	X	X	X
4	NAS1068A3	. Nut Plate	4	X	X	X
5	MS20426AD3-3	. Rivet	8	X	X	X
6	B-00396-1	. Dimmer	3	X	X	X
–	1-480426-0	. Pin Housing	3	X	X	X
–	60618-1	. Pin	12	X	X	X
7	AN3-4A	. Bolt	7	X	X	X
8	AN364-1032A	. Nut	5	X	X	X
9†	ECD075-13	. Relay	2	X	X	X
9‡	ECD075-15	. Relay	2			X
9◦	6-1616945-7	. Relay	2	X	X	X
10	AN365-1032A	. Nut	4	X	X	X
11	MAC-VR	. Voltage Regulator	1	X	X	X
12	AN526-632R7	. Screw	11	X	X	X
13	AN960-6L	. Washer	19	X	X	X
14	AN364-632A	. Nut	11	X	X	X
15●●	KXD-X9N	. Relay (Landing Light)	1	X	X	X
15	W97CSX-2	. Relay (Landing Light) (Replaced by KXD-X9N)	1	X	X	X
16	AN960-8L	. Washer	1	X	X	X
17	AN365-832A	. Nut	1	X	X	X
18	SK3500	. Rectifier, Stud (Diode)	1	X	X	X
19	AN960-10L	. Washer	1	X	X	X
20††	4196652-3	. Terminal Strip (T5)	1	X	X	X
20	4192083-9	. Terminal Strip (T5) (Superseded by 4196652-3)	1	X	X	X
–	1-604102-1	. . Terminal Block	14	X	X	X
–	601985-2	. . Commoning Tab	2	X	X	X
–	604111-1	. . End Stop	2	X	X	X
–	603817-4	. . Flanged Track	7 In.	X	X	X
21‡‡	4192083-1	. Terminal Strip (T1) No longer used	1	X	X	X
–	MS27212-3-4	. . Terminal Board Assembly	1	X	X	X
–	MS25226-6-4	. . Link, Terminal Connecting Link	2	X	X	X
–	AN960C416L	. . Washer	4	X	X	X

UNCONTROLLED COPY WHEN DOWNLOADED OR PRINTED

Visit www.enstromhelicopter.com for instructions to order an original manual and to register for email notification of updates.

FIGURE 10-18. ELECTRICAL COMPONENTS - KEEL INSTALLATION

ITEM NUMBER	PART NUMBER	DESCRIPTION	QTY PER ASSY	EFFECTIVITY		
				TH-28	480	480B
–	MS21043-4	. . Nut	4	X	X	X
22††	4196652-101	. Terminal Strip (T9)	1	X	X	X
22	4192083-15	. Terminal Strip (T9) (Superseded by 4196652-101)	1	X	X	X
–	1-604102-1	. . Terminal Block	10	X	X	X
–	601985-2	. . Commoning Tab	9	X	X	X
–	604111-1	. . End Stop	2	X	X	X
–	603817-4	. . Flanged Track	6 In.	X	X	X
23●	ECD4072-1	. Resistor (M/R XMSN Pump)	1			X
24	MS27039-1-11	. Screw	2			X
25	AN960-10L	. Washer	4			X
26	AN364-1032A	. Nut	2			X
27‡	AN4-3A	. Bolt	4			X
28‡	AN960-416L	. Washer	4			X
29‡	4196558-5	. Relay Bracket Assembly	1			X
–	NAS1068A4	. . Nut Plate	4			X
–	MS20426AD3-3	. . Rivet	8			X
30‡	AN3-4A	. Bolt	4			X
31‡	AN960D10L	. Washer	8			X
32‡	AN365-1032A	. Nut	4			X
33●●	M83536/2-024L	. Relay (RL19) (Gen. Off Light)	1			X
33‡	KUP-5D55-24	. Relay (RL19) (Gen. Off Light) (Replaced by M83536/2-024L)	1			X
34●●	M83536/33-003L	. Relay (RL18) (Start Enable)	1			X
34‡	W389CX-13	. Relay (RL18) (Start Enable) (Replaced by M83536/33-003L)	1			X
35‡	AN526-632R7	. Screw	4			X
36‡	AN960-6L	. Washer	8			X
37‡	AN364-632A	. Nut	4			X
38◦◦	ECD4079-1	. RPM Switch	1		X	X
39	MS27039-0806	. Screw	4		X	X
40	MS3126F12-10S	. Connector	1		X	X

* The GCU is located beneath oil cooler blower deck for TH-28 S/N 3006 and 480 S/N 5001-5036 unless modified I/A/W SIL T-014. Refer to Figure 10-16.

† 480/480B S/N: 5001 through 5077, 5079 through 5086.

‡ 480B S/N: 5077 through 5078, and 5085 through 5181.

● Not used: 480B S/N 5039-5113 modified IAW with SIL T-063, S/N 5114 and subsequent, and 480B equipped with Increased Cooling Kit, P/N 4230031.

UNCONTROLLED COPY WHEN DOWNLOADED OR PRINTED

Visit www.enstromhelicopter.com for instructions to order an original manual and to register for email notification of updates.

◦	Relay kit 4230040, retrofittable for 480/480B S/N 5001 through 5131.
◦◦	Hi-Lo Rotor RPM Switch. Effectivity 480B S/N 5134 and subsequent. Retrofittable to 480/480B S/N 5001 through 5133, and 5135.
≡	See Appendix A for equivalent part information.
●●	Effectivity 480B S/N 5155 and subsequent. Retrofittable to 480 S/N 5001, 480B S/N 5042 and subsequent.
††	Effectivity 480B S/N 5174 and subsequent. Retrofittable to 480 S/N 5001 to 5041 and 480B S/N 5042 and subsequent.
‡‡	Last use 480B S/N 5134.

UNCONTROLLED COPY WHEN DOWNLOADED OR PRINTED

Visit www.enstromhelicopter.com for instructions to order an original manual and to register for email notification of updates.

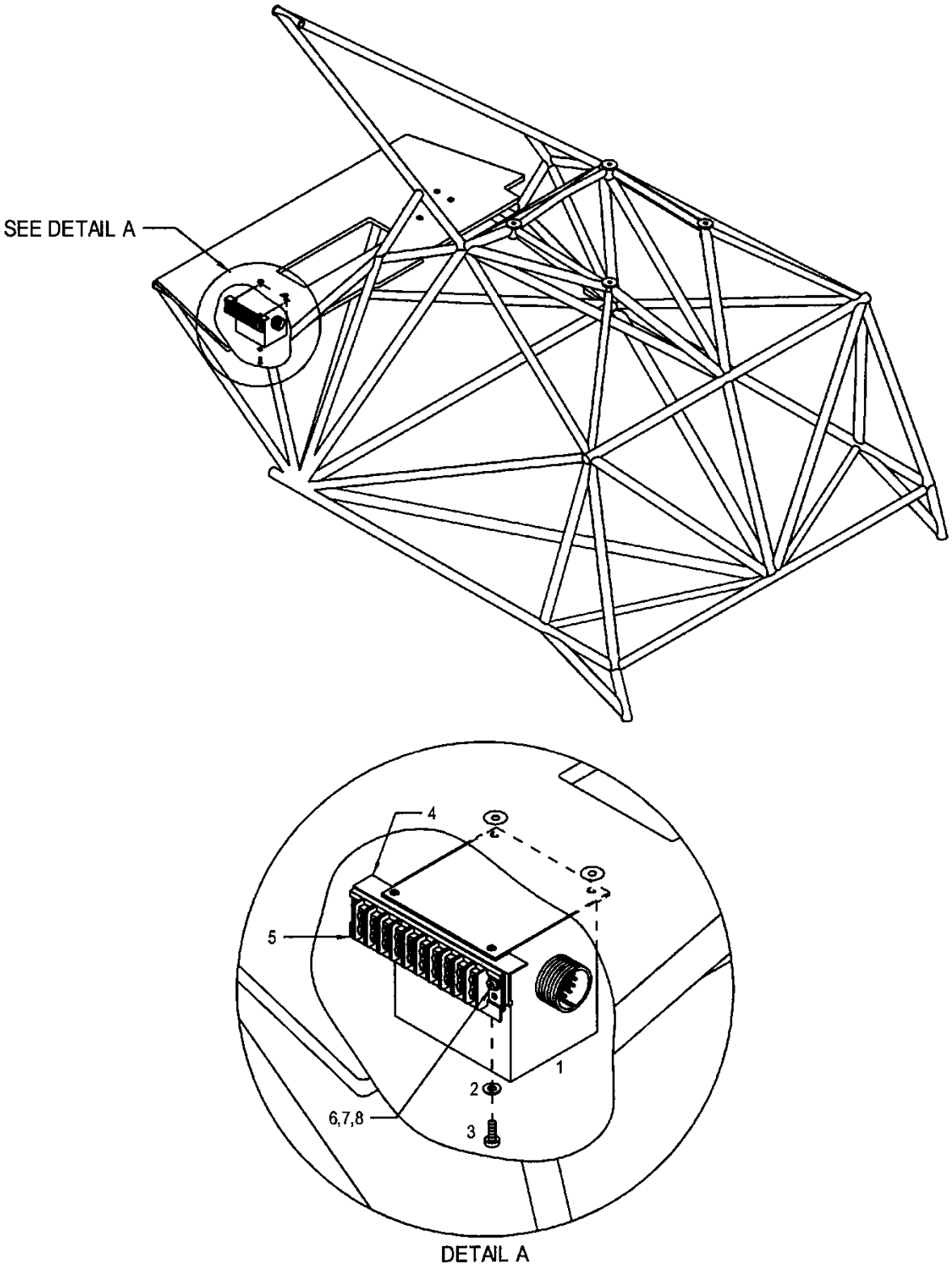

FIGURE 10-19. GENERATOR CONTROL UNIT/T9 TERMINAL STRIP INSTALLATION

UNCONTROLLED COPY WHEN DOWNLOADED OR PRINTED

Visit www.enstromhelicopter.com for instructions to order an original manual and to register for email notification of updates.

FIGURE 10-19. GENERATOR CONTROL UNIT/T9 TERMINAL STRIP INSTALLATION

ITEM NUMBER	PART NUMBER	DESCRIPTION	QTY PER ASSY	EFFECTIVITY		
				TH-28	480	480B
1*	VR1528-11B	. Generator Control Unit	1	X	X	
2	AN960-10L	. Washer	4	X	X	
3	MS35207-263	. Screw	4	X	X	
4	4196595-11	. Bracket	1	X	X	
5†	4196652-101	. Terminal Strip (T9)	1	X	X	
5	4192083-15	. Terminal Strip (T9) (Superseded by 4196652-101)	1	X	X	
–	1-604102-1	. . Terminal Block	10	X	X	
–	601985-2	. . Commoning Tab	9	X	X	
–	604111-1	. . End Stop	2	X	X	
–	603817-4	. . Flanged Track	6 In.	X	X	
6	AN526-632R7	. Screw	2	X	X	
7	AN960-6L	. Washer	4	X	X	
8	AN364-632A	. Nut	2	X	X	
–●●	4230019-1	Generator Control Mounting Kit	1		X	
–●●	CR3213-4-02	. Rivet	6		X	
–●●	NAS1351C3H8	. Screw	4		X	
–●●	AN960D10	. Washer	4		X	
–●●	AN526-632R7	. Screw	2		X	
–●●	AN960-6L	. Washer	4		X	
–●●	AN364-632A	. Nut	2		X	
–●●	GEE62FR-C	. Edging	18 in.		X	

* GCU located in the right side of the keel for TH-28s S/N 3007 and subsequent and 480s S/N 5037 and subsequent and in aircraft with the GCU relocated I/A/W SIL T-014. Refer to Figure 10-15.

●● These parts comprise the Generator Control Mounting Kit. This Kit is to be used in accordance with SIL T-014. Effectivity 480 S/N 5001 to 5036.

† Effectivity 480B S/N 5174 and subsequent. Retrofittable to 480 S/N 5001 to 5041 and 480B S/N 5042 and subsequent.

UNCONTROLLED COPY WHEN DOWNLOADED OR PRINTED

Visit www.enstromhelicopter.com for instructions to order an original manual and to register for email notification of updates.

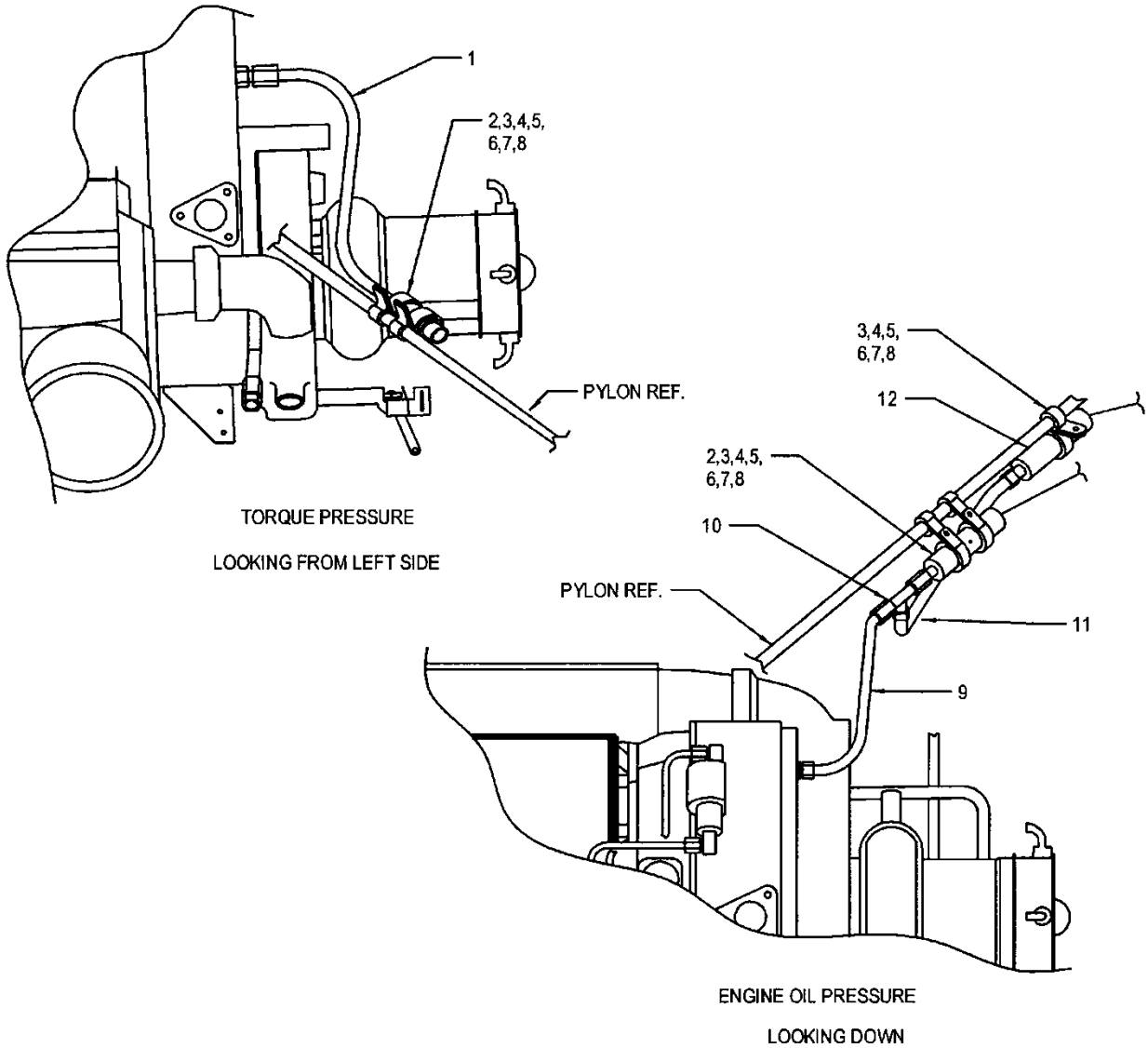

FIGURE 10-20. ENGINE OIL PRESSURE AND TORQUE INDICATION SYSTEM

UNCONTROLLED COPY WHEN DOWNLOADED OR PRINTED

Visit www.enstromhelicopter.com for instructions to order an original manual and to register for email notification of updates.

FIGURE 10-20. ENGINE OIL PRESSURE AND TORQUE INDICATION SYSTEM

ITEM NUMBER	PART NUMBER	DESCRIPTION	QTY PER ASSY	EFFECTIVITY		
				TH-28	480	480B
1	4120030-1	. Hose Assembly	1	X	X	X
2 ≡	IPT-20RT1-1000-150G	. Transducer	2	X	X	X
3	MS21919WF8	. Clamp	5	X	X	X
4	MS21919WF16	. Clamp	5	X	X	X
5	AN515-8R8	. Screw	5	X	X	X
6	AN960-8	. Washer	10	X	X	X
7	AN938-8	. Lock Washer	5	X	X	X
8	AN340-832	. Nut	5	X	X	X
9	4120030-3	. Hose Assembly	1	X	X	X
10*	4R6BX-SS	. Swivel Tee	1	X	X	X
11*	4120030-5	. Line Assembly	1	X	X	X
12*	2335-265	. Pressure Switch (Hour Meter)	1	X	X	X

≡ See Appendix A for equivalent part information.

* Not equipped on ships with G1000H installed.

UNCONTROLLED COPY WHEN DOWNLOADED OR PRINTED

Visit www.enstromhelicopter.com for instructions to order an original manual and to register for email notification of updates.

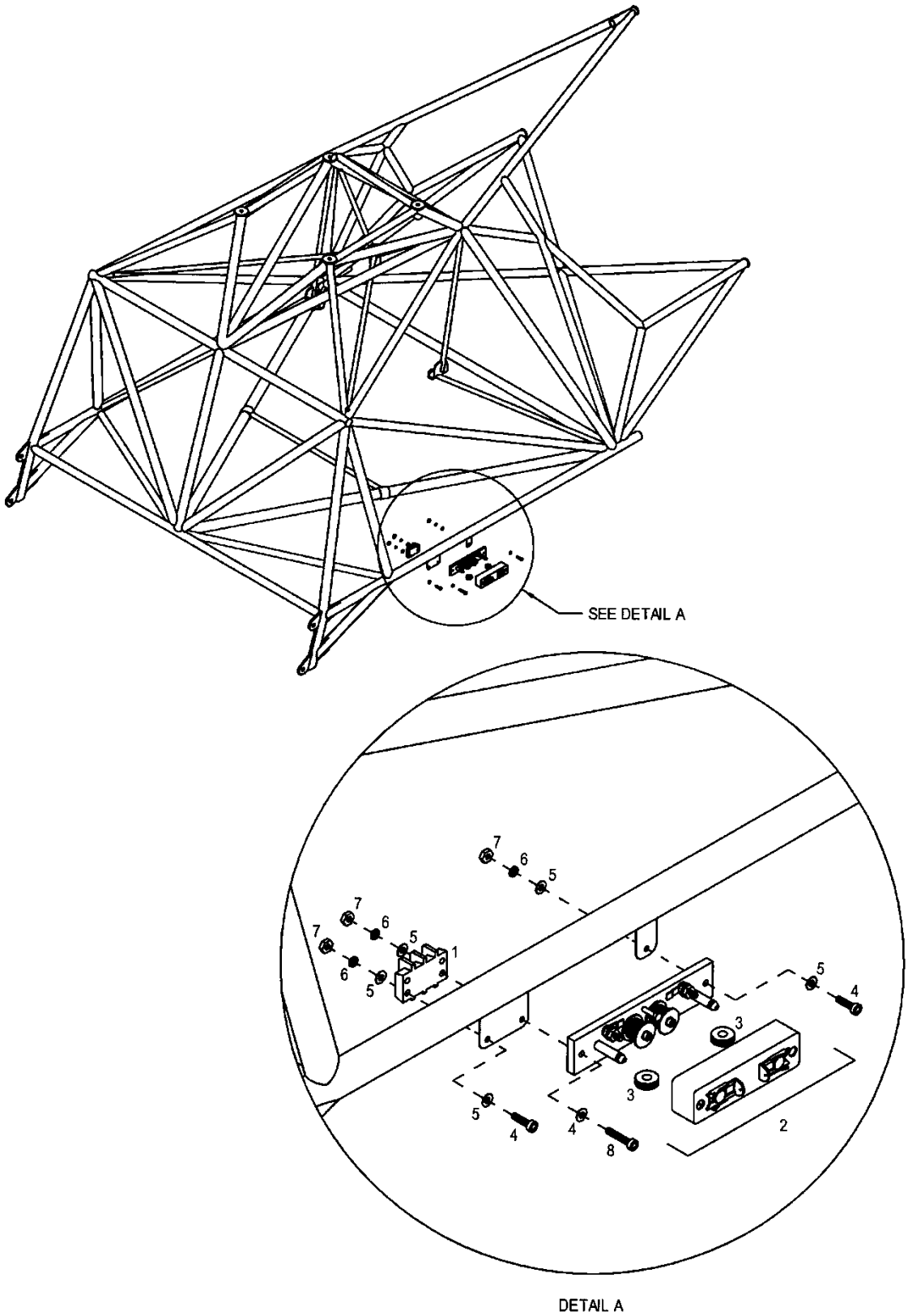

FIGURE 10-21. ENGINE T.O.T. HARNESS TERMINAL BLOCK

UNCONTROLLED COPY WHEN DOWNLOADED OR PRINTED

Visit www.enstromhelicopter.com for instructions to order an original manual and to register for email notification of updates.

FIGURE 10-21. ENGINE T.O.T. HARNESS TERMINAL BLOCK

ITEM NUMBER	PART NUMBER	DESCRIPTION	QTY PER ASSY	EFFECTIVITY		
				TH-28	480	480B
1†	4196652-7	. Terminal Strip (T10)	1	X	X	X
1	4192083-19	. Terminal Strip (T10) (Superseded by 4196652-7)	1	X	X	X
2*	AN5534-2	. Thermocouple Lead Spool Resistor	1	X	X	
3	MS35489-6	. . Grommet	2	X	X	
4	AN515-8R10	. Screw	2	X	X	X
5**	AN960-8L	. Washer	6	X	X	X
6**	AN935-8	. Lock Washer	3	X	X	X
7**	AN340-8	. Nut	3	X	X	X
8*	AN515-8R14	. Screw	1	X	X	

* Only used with standard panel installation with “passive” T.O.T. indicating system.

** Adjust quantity when item 2 is not installed.

† Effectivity 480B S/N 5174 and subsequent. Retrofittable to 480 S/N 5001 to 5041 and 480B S/N 5042 and subsequent.

UNCONTROLLED COPY WHEN DOWNLOADED OR PRINTED

Visit www.enstromhelicopter.com for instructions to order an original manual and to register for email notification of updates.

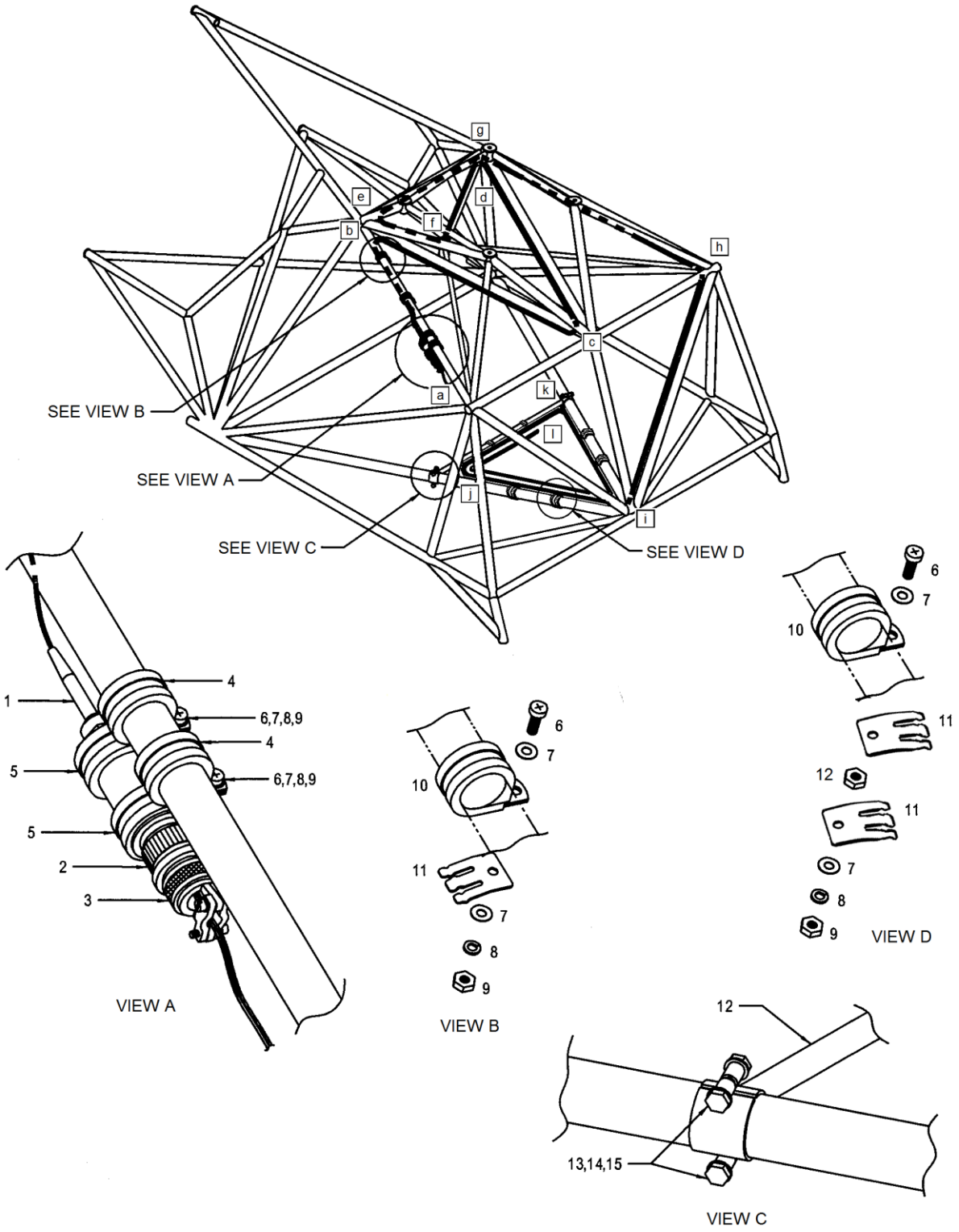

FIGURE 10-22. FIRE DETECTOR INSTALLATION

UNCONTROLLED COPY WHEN DOWNLOADED OR PRINTED

Visit www.enstromhelicopter.com for instructions to order an original manual and to register for email notification of updates.

FIGURE 10-22. FIRE DETECTOR INSTALLATION

ITEM NUMBER	PART NUMBER	DESCRIPTION	QTY PER ASSY	EFFECTIVITY		
				TH-28	480	480B
1**	3001-127-470/180C-6.3M	. Fire Detector	1	X	X	X
1	3001-127-47018	. Fire Detector (Superseded by 3001-127-470/180C-6.3M)	1	X	X	X
2	MS3456KT14S-5S	. Connector	1	X	X	X
3	MS3417-14C	. Relief Clamp	1	X	X	X
4	MS21919WCJ14	. Clamp	2	X	X	X
5	MS21919WCJ16	. Clamp	2	X	X	X
6	AN515-8R9	. Screw	29	X	X	X
7	AN960-8L	. Washer	58	X	X	X
8	AN935-8	. Lock Washer	29	X	X	X
9	AN340-8	. Nut	29	X	X	X
10*	MS21919WF8	. Clamp	7	X	X	X
10*	MS21919WF12	. Clamp	2	X	X	X
10*	MS21919WF14	. Clamp	5	X	X	X
10*	MS21919WF16	. Clamp	13	X	X	X
11	3659-03	. Clamp	34	X	X	X
12	4119521-1	. Support Tube Assembly	1	X	X	X
13	AN3-11A	. Bolt	4	X	X	X
14	NAS1149F0332P	. Washer	8	X	X	X
15	MS21042-3	. Nut	4	X	X	X

* Install correct size clamp for corresponding pylon tube along detector routing.

** Effectivity 480B S/N 5155 and subsequent. Retrofittable to 480 S/N 5001 to 5041 and 480B S/N 5042 and subsequent.

UNCONTROLLED COPY WHEN DOWNLOADED OR PRINTED

Visit www.enstromhelicopter.com for instructions to order an original manual and to register for email notification of updates.

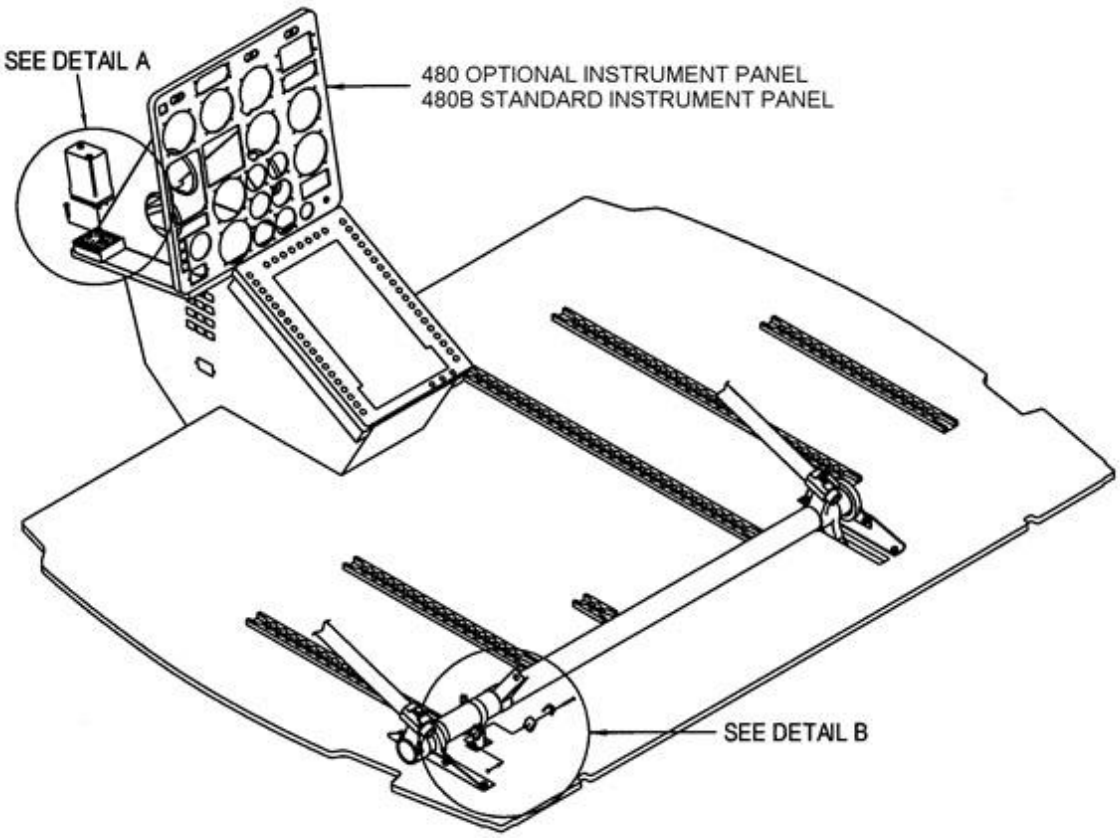

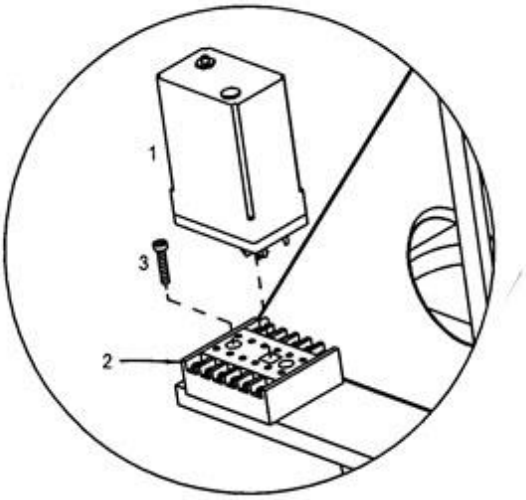

DETAIL A
S/N 5135, 5133 AND EARLIER

Sheet 1 of 3

FIGURE 10-23. LOW ROTOR WARNING AND MICRO SWITCH INSTALLATION

UNCONTROLLED COPY WHEN DOWNLOADED OR PRINTED

Visit www.enstromhelicopter.com for instructions to order an original manual and to register for email notification of updates.

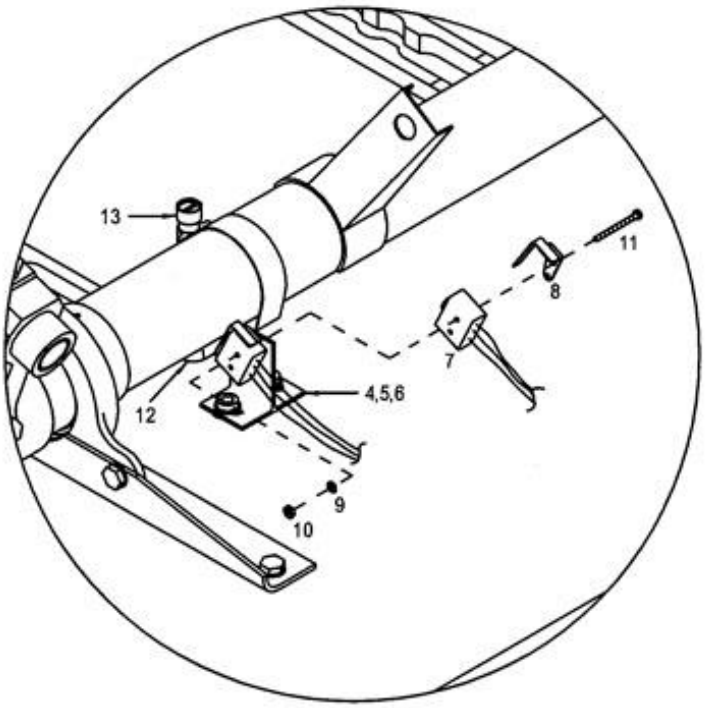

DETAIL B
5156 AND PRIOR

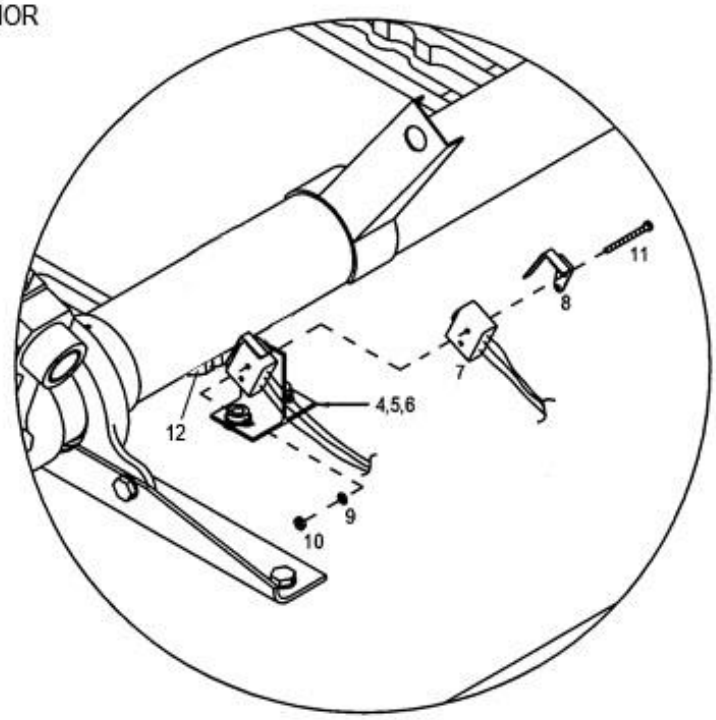

DETAIL B
5157 AND SUBSEQUENT

Sheet 2 of 3

FIGURE 10-23. LOW ROTOR WARNING AND MICRO SWITCH INSTALLATION

UNCONTROLLED COPY WHEN DOWNLOADED OR PRINTED

Visit www.enstromhelicopter.com for instructions to order an original manual and to register for email notification of updates.

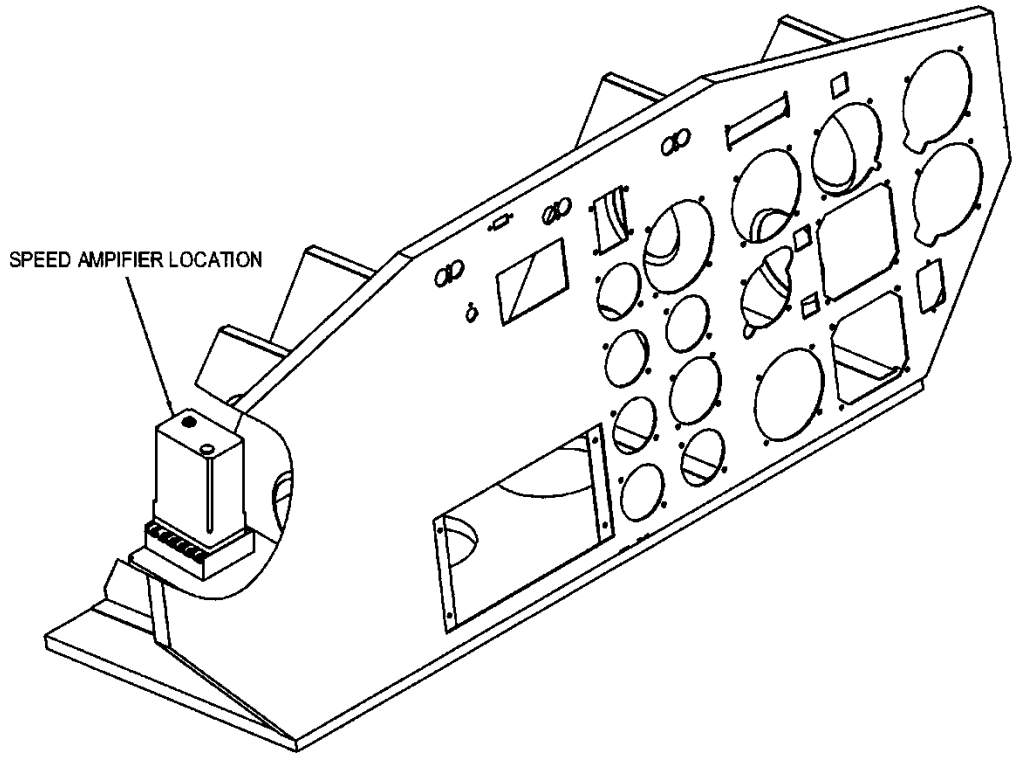

TH-28 INSTRUMENT PANEL

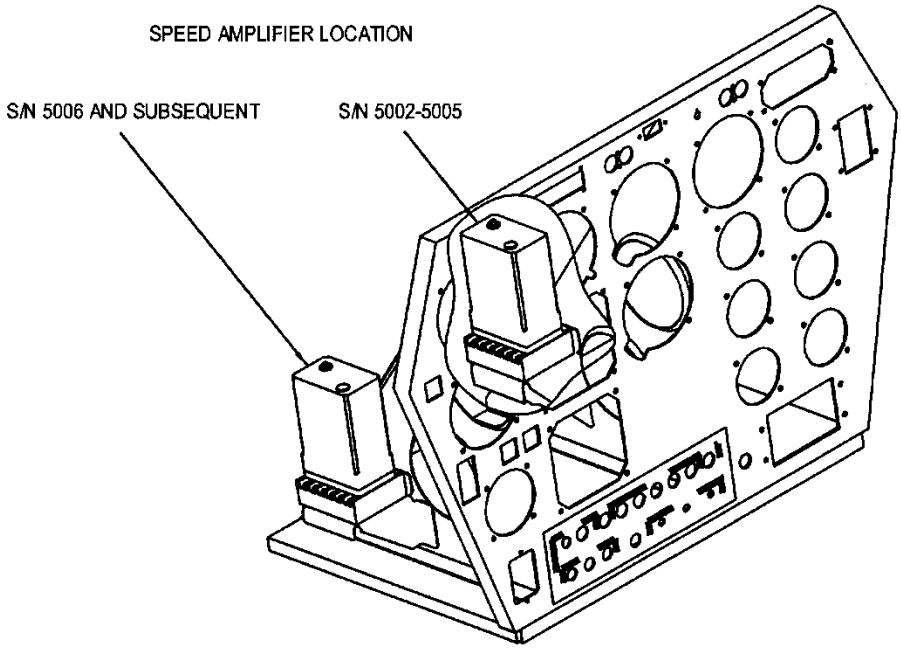

480 STANDARD INSTRUMENT PANEL
480B OPTIONAL INSTRUMENT PANEL

Sheet 3 of 3

FIGURE 10-23. LOW ROTOR WARNING AND MICRO SWITCH INSTALLATION

UNCONTROLLED COPY WHEN DOWNLOADED OR PRINTED

Visit www.enstromhelicopter.com for instructions to order an original manual and to register for email notification of updates.

FIGURE 10-23. LOW ROTOR WARNING AND MICRO SWITCH INSTALLATION

ITEM NUMBER	PART NUMBER	DESCRIPTION	QTY PER ASSY	EFFECTIVITY		
				TH-28	480	480B
1**	726607	. Speed Amplifier	1	X	X	X
2**	58390	. Socket	1	X	X	X
3**	AN515-8R14	. Screw	3	X	X	X
4	4196556-13	. Switch Bracket	1	X	X	X
5	MS35207-263	. Screw	2	X	X	X
6	AN960D10	. Washer	2	X	X	X
7*	1SE1	. Switch, Miniature	2	X	X	X
8*	JE-1	. Actuator	2	X	X	X
9	AN936A2	. . Lock Washer	1	X	X	X
10	AN340-2	. . Nut	1	X	X	X
11	MS35206-321	. Screw	2	X	X	X
12†	4199072-13	. Actuator Contactor	3		X	X
12	28-19048-11	. Block Cam (Superseded by	2	X	X	X
13	QS200-M24S	. Clamp (Used with 28-19048-11)	1	X	X	X

* Change quantity to 3 for 480B S/N 5046 and subsequent (Low Rotor, Engine Out, Hour Meter).

** Effectivity: 480 and 480B, S/N 5135, 5133 and earlier.

† Effectivity 480B S/N 5157 and subsequent. Retrofittable to 480 S/N 5001 – 5041 and 480B S/N 5042 and subsequent.

UNCONTROLLED COPY WHEN DOWNLOADED OR PRINTED

Visit www.enstromhelicopter.com for instructions to order an original manual and to register for email notification of updates.

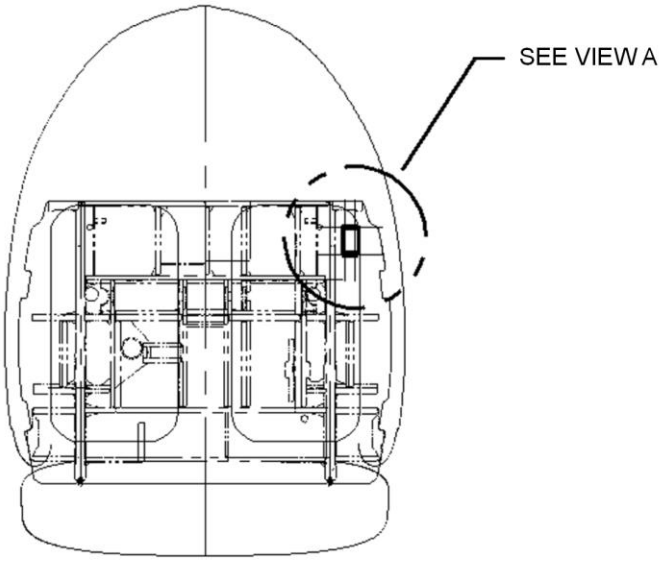

ORIENTATION VIEW

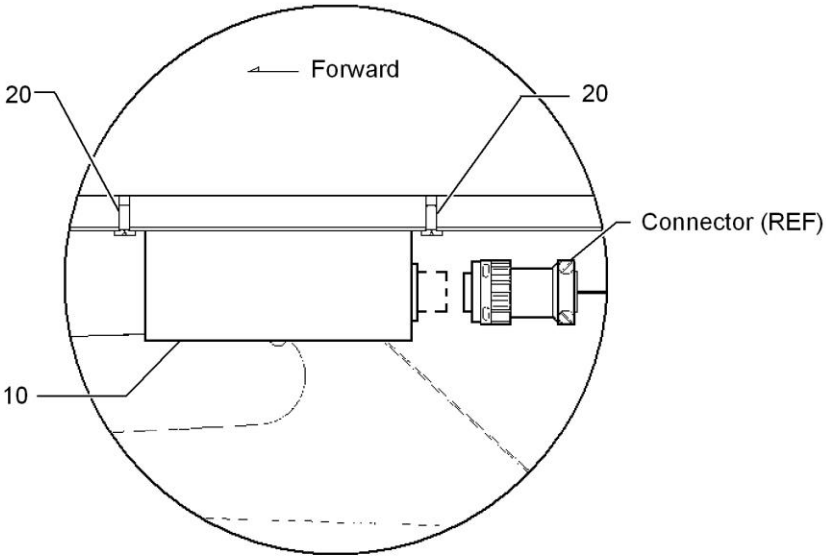

VIEW A
LOOKING INBOARD

FIGURE 10-23.1. HI-LO ROTOR RPM SWITCH INSTALLATION

UNCONTROLLED COPY WHEN DOWNLOADED OR PRINTED

Visit www.enstromhelicopter.com for instructions to order an original manual and to register for email notification of updates.

FIGURE 10-23.1. HI-LO ROTOR RPM SWITCH INSTALLATION

ITEM NUMBER	PART NUMBER	DESCRIPTION	QTY PER ASSY	EFFECTIVITY		
				TH-28	480	480B
–	4199071	Hi-Lo Rotor RPM Switch Installation	REF			X
10	ECD4079-1	. Hi-Low Rotor Rpm Switch	1			X
20	MS27039-0806	. Screw, Machine, 8-32 X 0.375"	4			X

°° Hi-Lo Rotor RPM Switch. Effectivity 480B S/N 5134 and subsequent. Retrofittable to 480/480B S/N 5001 through 5133, and 5135.

UNCONTROLLED COPY WHEN DOWNLOADED OR PRINTED

Visit www.enstromhelicopter.com for instructions to order an original manual and to register for email notification of updates.

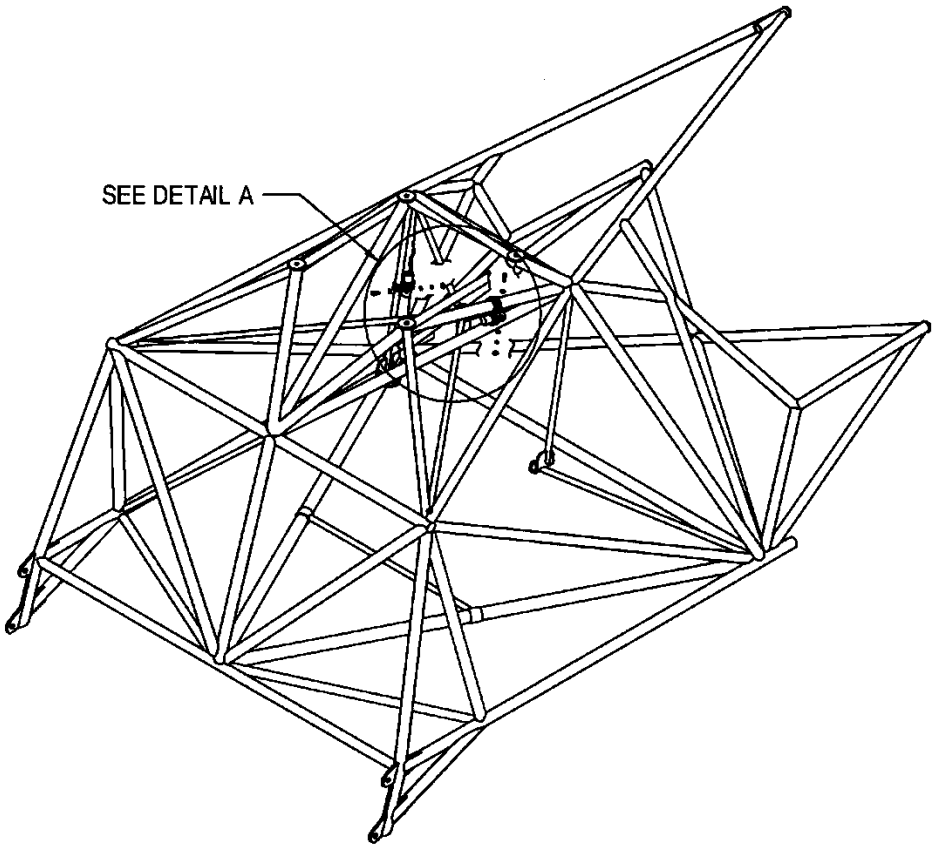

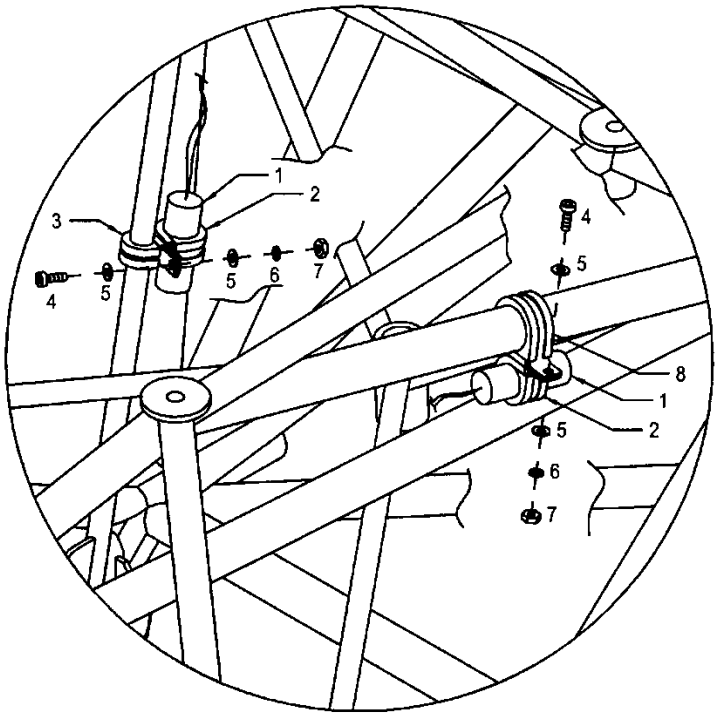

DETAIL A

TH-28 Only
Sheet 1 of 2

FIGURE 10-24. TH-28 CHIP DETECTOR PROGRAM CONTINUITY SENSOR INSTALLATION

UNCONTROLLED COPY WHEN DOWNLOADED OR PRINTED

Visit www.enstromhelicopter.com for instructions to order an original manual and to register for email notification of updates.

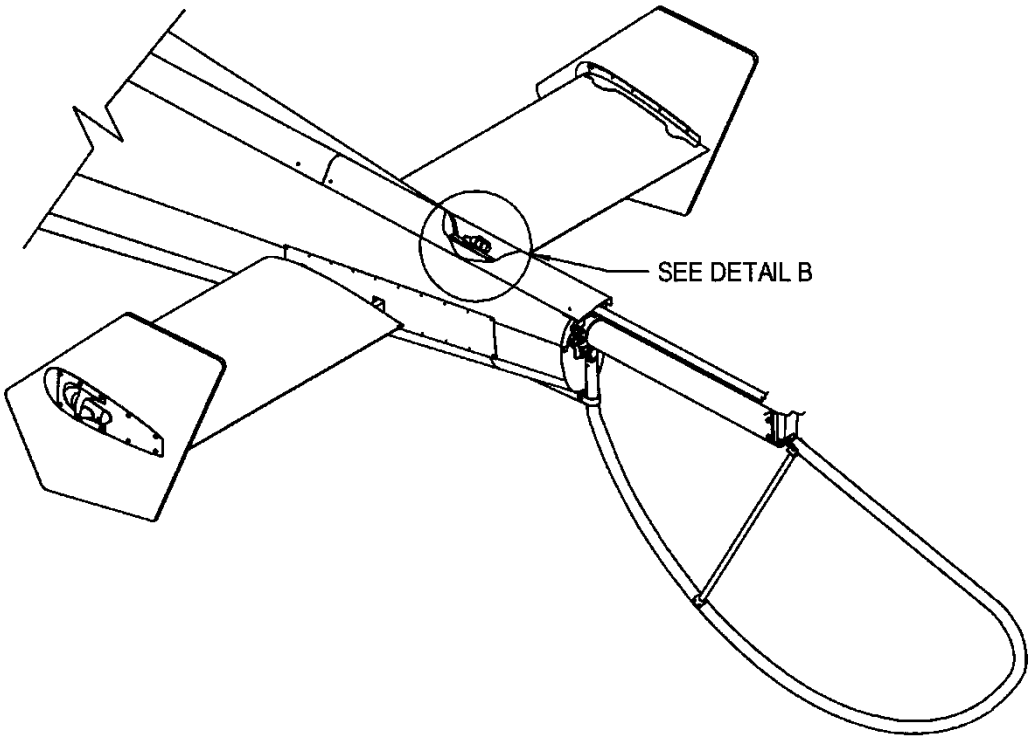

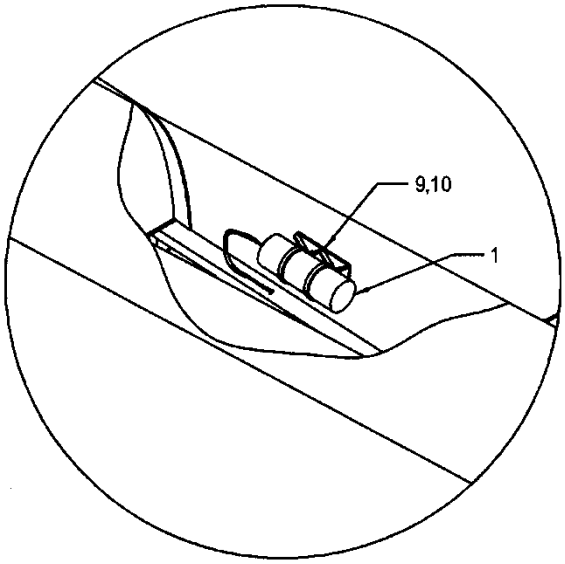

DETAIL B

TH-28 Only
Sheet 2 of 2

FIGURE 10-24. TH-28 CHIP DETECTOR PROGRAM CONTINUITY SENSOR INSTALLATION

UNCONTROLLED COPY WHEN DOWNLOADED OR PRINTED

Visit www.enstromhelicopter.com for instructions to order an original manual and to register for email notification of updates.

FIGURE 10-24. TH-28 CHIP DETECTOR PROGRAM CONTINUITY SENSOR INSTALLATION

ITEM NUMBER	PART NUMBER	DESCRIPTION	QTY PER ASSY	EFFECTIVITY		
				TH-28	480	480B
1 ≡	PCS-111A	. Program Continuity Sensor	3	X		
2	MS21919WF14	. Clamp	2	X		
3	MS21919WF8	. Clamp	1	X		
4	AN515-8R9	. Screw	2	X		
5	AN960-8L	. Washer	4	X		
6	AN935-8	. Lock Washer	2	X		
7	AN340-8	. Nut	2	X		
8	MS21919WF16	. Clamp	1	X		
9	SST1M-MP	. Cable Tie	2	X		
10	ABMM-AT-C	. Mount, Cable Tie	2	X		

≡ See Appendix A for equivalent part information.

UNCONTROLLED COPY WHEN DOWNLOADED OR PRINTED

Visit www.enstromhelicopter.com for instructions to order an original manual and to register for email notification of updates.

INTENTIONALLY LEFT BLANK

UNCONTROLLED COPY WHEN DOWNLOADED OR PRINTED

Visit www.enstromhelicopter.com for instructions to order an original manual and to register for email notification of updates.

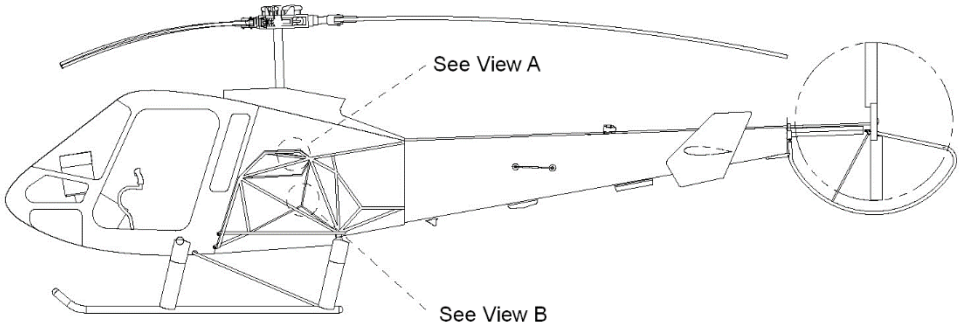

Orientation View
Programmed Continuity Sensors
PCS1 Engine Chip Detectors and PCS3 Main Rotor Transmission Chip Detector

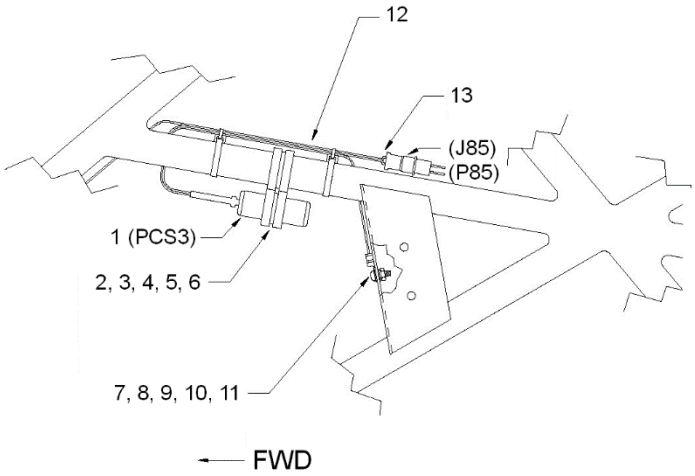

View A Port Side

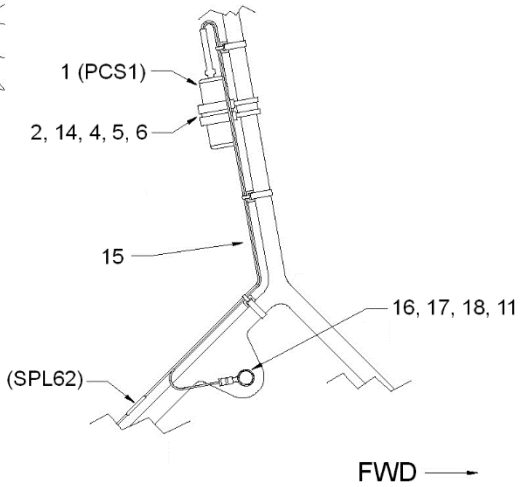

View B Starboard Side

480/480B SN5001 and subsequent

FIGURE 10-24.1 480/480B PROGRAMMED CONTINUITY SENSORS – ENGINE AND MAIN ROTOR TRANSMISSION CHIP DETECTORS

UNCONTROLLED COPY WHEN DOWNLOADED OR PRINTED

Visit www.enstromhelicopter.com for instructions to order an original manual and to register for email notification of updates.

FIGURE 10-24.1 480/480B PROGRAMMED CONTINUITY SENSORS – ENGINE AND MAIN ROTOR TRANSMISSION CHIP DETECTORS

ITEM NUMBER	PART NUMBER	DESCRIPTION	QTY PER ASSY	EFFECTIVITY		
				TH-28	480	480B
–	4199017-1	. Programmed Continuity Sensor Installation	REF		X	X
1 ≡	PCS-111A	. Sensor: Programmed Continuity	1		X	X
2*	S500-12	. Clamp, Cushioned Loop .75 Dia	1		X	X
2	MS21919WF12	. Clamp (Superseded by S500-12)	1		X	X
3*	S500-16	. Clamp, Cushioned Loop 1.0 Dia	1		X	X
3	MS21919WF16	. Clamp (Superseded by S500-16)	1		X	X
4**	MS35206-246	. Screw	2		X	X
4*	AN515-8R10	. Screw (Superseded by MS35206-246)	2		X	X
4	AN515-8R8	. Screw (Superseded by AN515-8R10)	2		X	X
5*	MS21042-08	. Nut, Hex	2		X	X
5	MS35649-282	. Nut (Superseded by MS21042-08)	2		X	X
6	NAS1149FN816P	. Washer, Flat, Light	4		X	X
7	AN526-6R6	. Screw	1		X	X
8	MS35649-262	. Nut	1		X	X
9	NAS1149FN616P	. Washer, Flat, #6 Light	1		X	X
10	MS35338-41	. Washer, Lock, #6	1		X	X
11	CP8-TB	. Shield, Kopr	A/R		X	X
12	4192514-69	. Wire Harness, Main Rotor Transmission Chip Detector	1		X	X
13**	60617-1	. Contact: Socket	1		X	X
13	60617-0	. Contact: Socket (Superseded by 60617-1)	1		X	X
14*	S500-8	. Clamp, Cushioned Loop .50 Dia	1		X	X
14	MS21919WF8	. Clamp (Superseded by S500-8)	1		X	X
15	4192514-67	. Wire Harness, Engine Chip Detector	1		X	X
16†	AN4-XXX	. Bolt	1		X	X
17†	AN960-416L	. Washer, Flat	2		X	X
18†	MS21042-4	. Nut, Hex	1		X	X
–	CBR1M-M	. Tie: Cable	A/R		X	X
–	CBR2M-M	. Tie: Cable	A/R		X	X
–	CBR3I-M	. Tie: Cable	A/R		X	X
–	CBR3S-M	. Tie: Cable	A/R		X	X
–	CR2-M	. Ring: Connector, Cable-Tie	A/R		X	X
–	ILT2S-M	. Panduit Cable Ties	A/R		X	X
–	LCB	. Cord: Lacing, Braided Nylon	12”		X	X
–	SST1M-MP	. Tie: Cable, 4"	1		X	X
–	SST2S-MP	. Tie: Cable, 6.7"	1		X	X

UNCONTROLLED COPY WHEN DOWNLOADED OR PRINTED

Visit www.enstromhelicopter.com for instructions to order an original manual and to register for email notification of updates.

≡ See Appendix A for equivalent part information.

Note: Tie cable and wires using SST2S-MP, SST1.5I-MP, SST1M-MP, ILT2S-M, CBR1M-M, CBR2M-M, CBR3I-M, CBR3S-M Cable ties, CR2-M Closed Connector ring and LCB Braided nylon lacing cord.

* Effectivity 480B S/N 5157 and subsequent. Retrofittable to 5001.

† Hardware is furnished with the sensor.

** Effectivity 480B S/N 5194 and subsequent. Retrofittable to 480 S/N 5001 – 5041 and 480B S/N 5042 and subsequent.

UNCONTROLLED COPY WHEN DOWNLOADED OR PRINTED

Visit www.enstromhelicopter.com for instructions to order an original manual and to register for email notification of updates.

INTENTIONALLY LEFT BLANK

UNCONTROLLED COPY WHEN DOWNLOADED OR PRINTED

Visit www.enstromhelicopter.com for instructions to order an original manual and to register for email notification of updates.

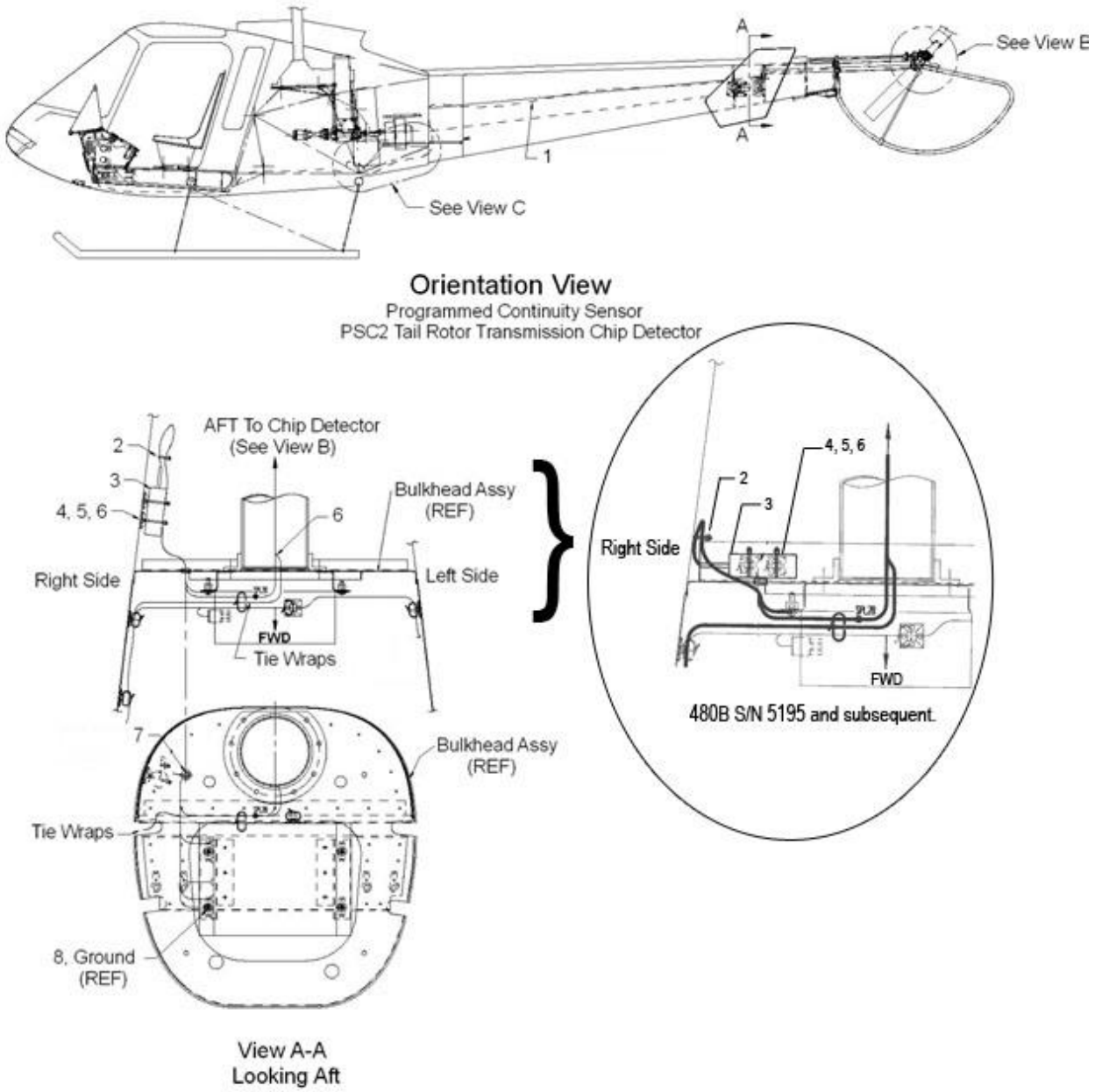

480/480B SN5001 and subsequent

Sheet 1 of 2

FIGURE 10-24.2 480/480B PROGRAMMED CONTINUITY SENSOR – TAIL ROTOR TRANSMISSION CHIP DETECTOR

UNCONTROLLED COPY WHEN DOWNLOADED OR PRINTED

Visit www.enstromhelicopter.com for instructions to order an original manual and to register for email notification of updates.

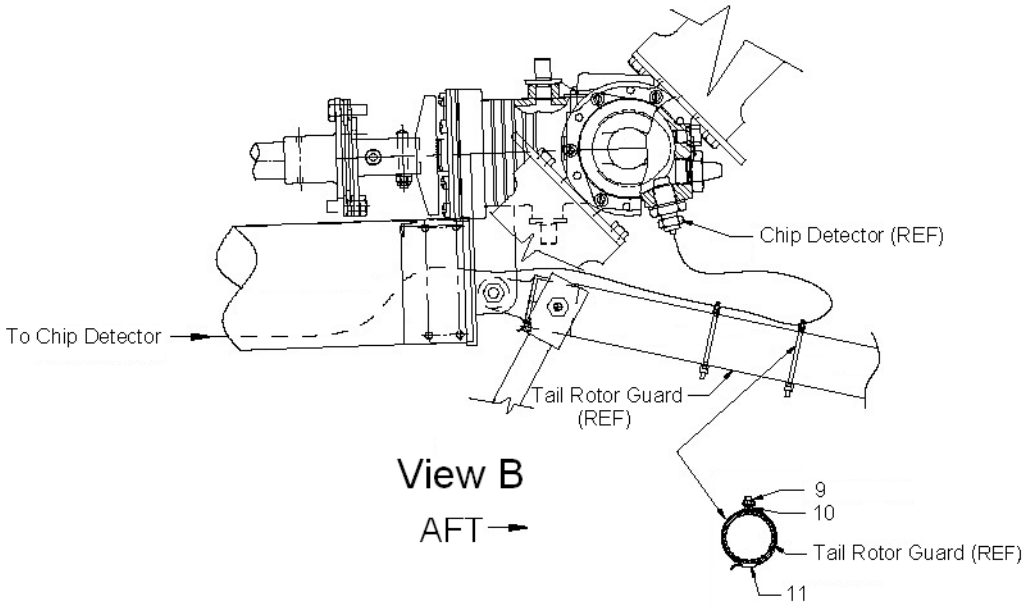

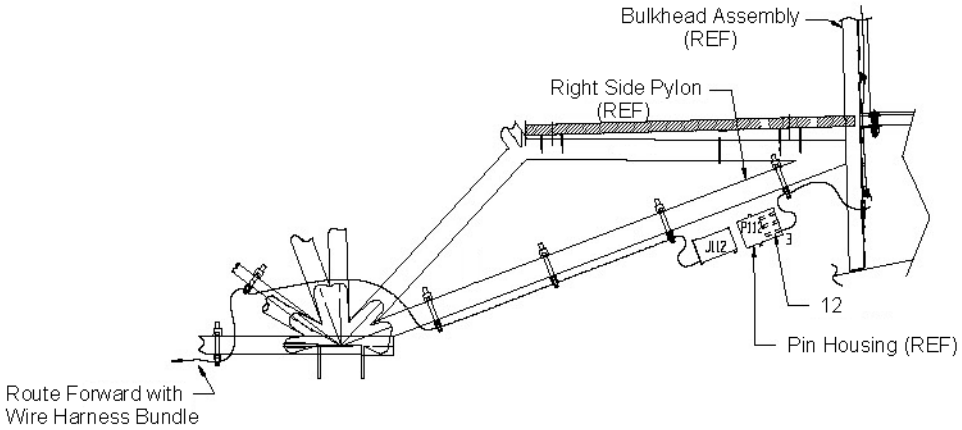

480/480B SN5001 and subsequent

Sheet 2 of 2

FIGURE 10-24.2 480/480B PROGRAMMED CONTINUITY SENSOR – TAIL ROTOR TRANSMISSION CHIP DETECTOR

UNCONTROLLED COPY WHEN DOWNLOADED OR PRINTED

Visit www.enstromhelicopter.com for instructions to order an original manual and to register for email notification of updates.

FIGURE 10-24.2 480/480B PROGRAMMED CONTINUITY SENSOR – TAIL ROTOR TRANSMISSION CHIP DETECTOR

ITEM NUMBER	PART NUMBER	DESCRIPTION	QTY PER ASSY	EFFECTIVITY		
				TH-28	480	480B
–	4199070-1	Programmed Continuity Sensor Installation	REF		X	X
1	4192514-37	. Wire Harness	1		X	X
2	SST1M-MP	. Tie: Cable, 4"	1		X	X
3 ≡	PCS-111A	. Sensor: Programmed Continuity	2		X	X
4	ABMM-AT-C	. Mount, Tie	1		X	X
5*	748-RTV	. Sealant				
5	732-RTV	. Sealant: Rubber, Clear Silicone (Superseded by 748-RTV)	A/R		X	X
6*	SST1.5I-M	. Tie: Cable				
6	SST1.5I-MP	. Tie: Cable (Superseded by SST1.5I-M)	2		X	X
7	MS35489-4	. Grommet, Rubber	1		X	X
8	CP8-TB	. Shield, Kopr	A/R		X	X
9	PLT.7M-MO	. Tie: Cable	2		X	X
10	CR2-M	. Ring: Connector, Cable-Tie	1		X	X
11	PLT2S-CO	. Tie: Cable	2		X	X
12	60618-1	. Contact: Pin	1		X	X
–	ILT2S-M	. Panduit Cable Ties	1		X	X
–	SST2S-MP	. Tie: Cable, 6.7”	1		X	X
–	CBR1M-M	. Tie: Cable	A/R		X	X
–	CBR2M-M	. Tie: Cable	A/R		X	X
–	CBR3I-M	. Tie: Cable	A/R		X	X
–	CBR3S-M	. Tie: Cable	A/R		X	X

≡ See Appendix A for equivalent part information.

Note: Tie cable and wires using SST2S-MP, SST1.5I-MP, SST1M-MP, ILT2S-M, CBR1M-M, CBR2M-M, CBR3I-M, CBR3S-M cable ties, and CR2-M connector ring.

* Effectivity 480B S/N 5195 and subsequent. Retrofittable to 480 S/N 5001 – 5041 and 480B S/N 5042 and subsequent.

UNCONTROLLED COPY WHEN DOWNLOADED OR PRINTED

Visit www.enstromhelicopter.com for instructions to order an original manual and to register for email notification of updates.

INTENTIONALLY LEFT BLANK

UNCONTROLLED COPY WHEN DOWNLOADED OR PRINTED

Visit www.enstromhelicopter.com for instructions to order an original manual and to register for email notification of updates.

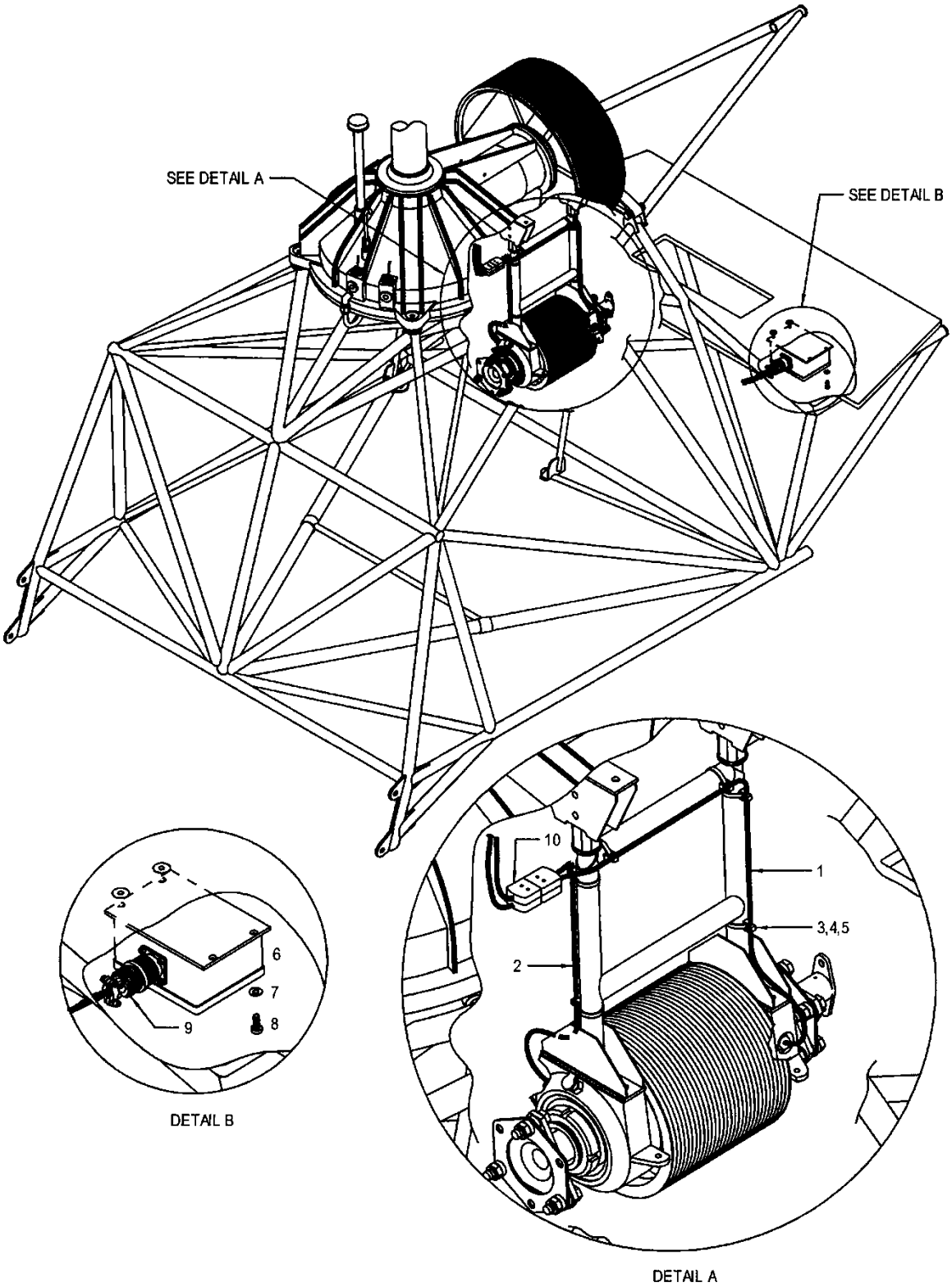

FIGURE 10-25. BEARING TEMPERATURE WARNING SYSTEM (GREASE LUBRICATED)

UNCONTROLLED COPY WHEN DOWNLOADED OR PRINTED

Visit www.enstromhelicopter.com for instructions to order an original manual and to register for email notification of updates.

FIGURE 10-25. BEARING TEMPERATURE WARNING SYSTEM (GREASE LUBRICATED)

ITEM NUMBER	PART NUMBER	DESCRIPTION	QTY PER ASSY	EFFECTIVITY		
				TH-28	480	480B
1*	4193003-5	. Thermocouple Probe Assembly	1	X	X	X
1	4193003-1	. Thermocouple Probe Assembly (Superseded by 4193003-5)	1	X	X	
–	2-008-S604-70	. . O-Ring	1	X	X	
–	MTP-J-F	. . Connector	1	X	X	X
2*	4193003-7	. Thermocouple Probe Assembly	1	X	X	X
2	4193003-3	. Thermocouple Probe Assembly (Superseded by 4193003-7)	1	X	X	
–	2-008-S604-70	. . O-Ring	1	X	X	
–	MTP-J-F	. . Connector	1	X	X	X
3	SST1.5I-MP	. Cable Tie	6	X	X	X
4	CR2-M	. Connector Ring	6	X	X	X
5	SST1M-MP	. Cable Tie	6	X	X	X
6**	ECD4039-3	. Warning Unit	1	X	X	X
6	ECD4039-1	. Warning Unit (Superseded by ECD4039-3)	1	X	X	
7	AN960D10L	. Washer	4	X	X	X
8	MS35207-263	. Screw	4	X	X	X
9	MS3126F14-15S	. Connector	1	X	X	X
10	MTP-J-M	. Connector	2	X	X	X

* Effectivity 480B S/N 5042 and subsequent. Retrofittable to 480 S/N 5001 and subsequent.

** Effectivity 480B S/N 5046 and subsequent. Retrofittable to 480 S/N 5001, 480B S/N 5042 and subsequent.

UNCONTROLLED COPY WHEN DOWNLOADED OR PRINTED

Visit www.enstromhelicopter.com for instructions to order an original manual and to register for email notification of updates.

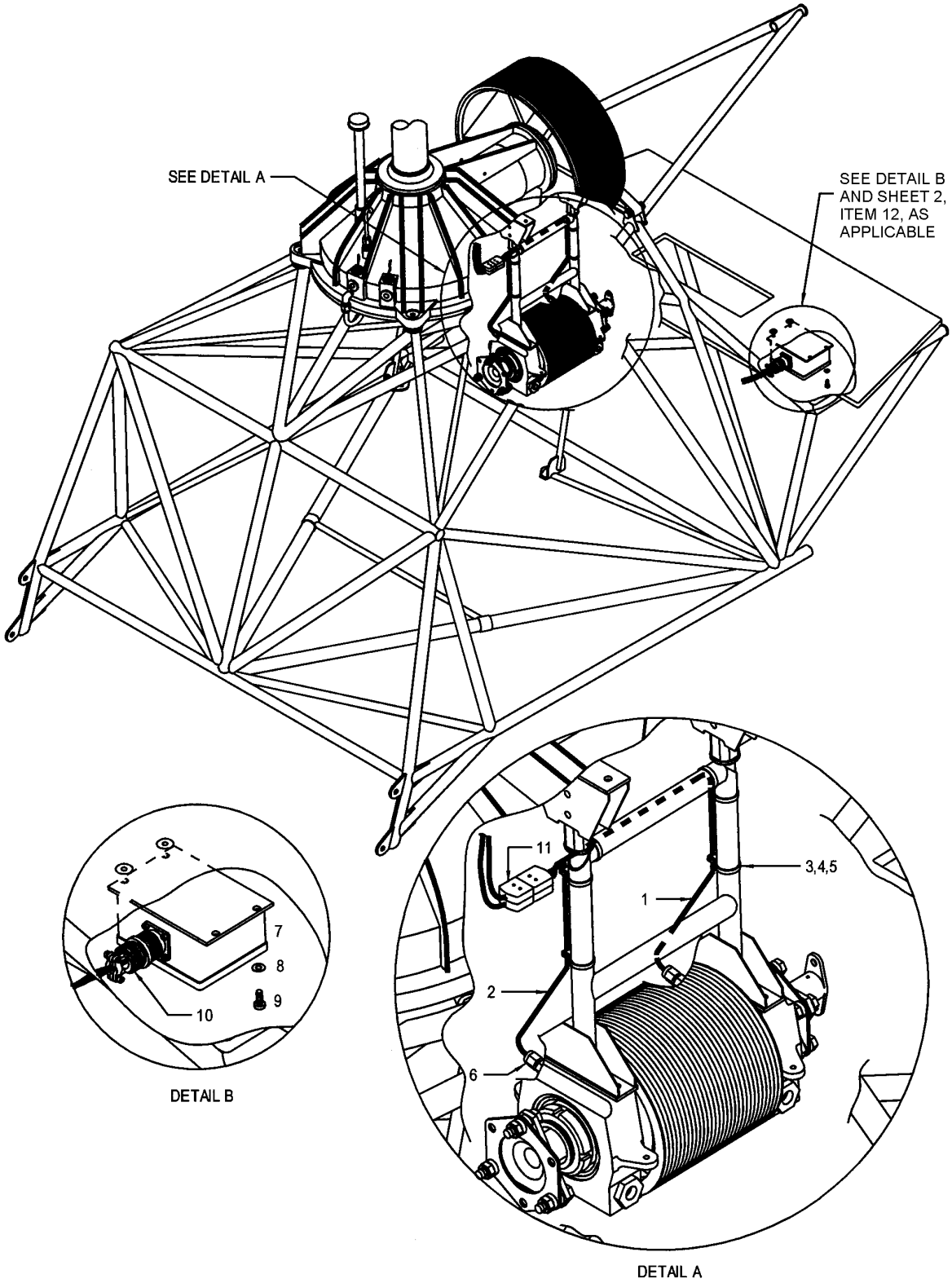

Sheet 1 of 2

FIGURE 10-26. BEARING TEMPERATURE WARNING SYSTEM (OIL LUBRICATED)

UNCONTROLLED COPY WHEN DOWNLOADED OR PRINTED

Visit www.enstromhelicopter.com for instructions to order an original manual and to register for email notification of updates.

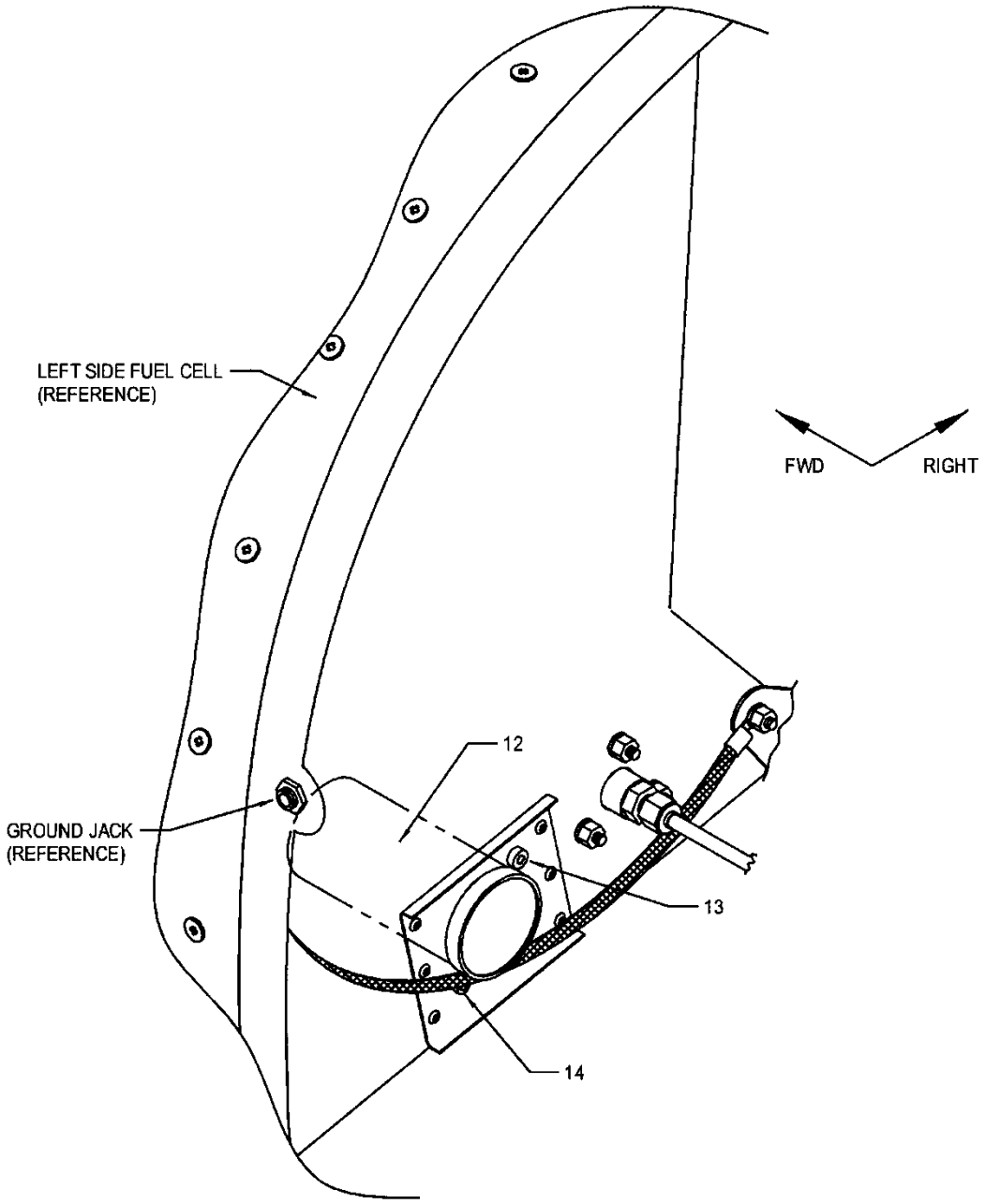

Sheet 2 of 2

FIGURE 10-26. BEARING TEMPERATURE WARNING SYSTEM (OIL LUBRICATED)

UNCONTROLLED COPY WHEN DOWNLOADED OR PRINTED

Visit www.enstromhelicopter.com for instructions to order an original manual and to register for email notification of updates.

FIGURE 10-26. BEARING TEMPERATURE WARNING SYSTEM (OIL LUBRICATED)

ITEM NUMBER	PART NUMBER	DESCRIPTION	QTY PER ASSY	EFFECTIVITY		
				TH-28	480	480B
1**	4193003-5	. Thermocouple Probe Assembly	1	X	X	X
–**	MTP-J-F	. . Connector	1	X	X	X
2**	4193003-7	. Thermocouple Probe Assembly	1	X	X	X
–**	MTP-J-F	. . Connector	1	X	X	X
3**	SST1.5I-MP	. Cable Tie	6	X	X	X
4**	CR2-M	. Connector Ring	6	X	X	X
5**	SST1M-MP	. Cable Tie	6	X	X	X
6**	SS-200-1-2SBT	. Fitting	2	X	X	X
–**	NAS617-2	. . O-Ring	1	X	X	X
7	ECD4039-1	. Warning Unit	1			X
8	AN960D10L	. Washer	4			X
9	MS35207-263	. Screw	4			X
10	MS3126F14-15S	. Connector	1			X
11	MTP-J-M	. Connector	2			X
–Δ	4192514-998	. Bearing Temperature Warning Harness	1			X
12*	ECD4039-3	. Bearing Temperature Warning Unit	1			X
–*	MS27473E14B18S	. Connector	1			X
–*	MS27506B14-2	. Back Shell	1			X
–*	M39029/89-501	. Iron Socket	2			X
–*	M39029/89-498	. Constantan Socket	2			X
–*	MS27488-20	. Wire Hole Filler	11			X
–*	MS28042-1A	. Clamp, Mounting	1			X
13*	MS35215-58	. Screw	1			X
14*	MS35214-44	. Screw	1			X

* 480B S/N: 5046, 5048 and subsequent.

** Approved for TH-28 and 480 models if equipped with oil lubricated lower pulley bearing assemblies.

Δ Wire harness assembly; includes Item 11 and following –* items.

UNCONTROLLED COPY WHEN DOWNLOADED OR PRINTED

Visit www.enstromhelicopter.com for instructions to order an original manual and to register for email notification of updates.

INTENTIONALLY LEFT BLANK

UNCONTROLLED COPY WHEN DOWNLOADED OR PRINTED

Visit www.enstromhelicopter.com for instructions to order an original manual and to register for email notification of updates.

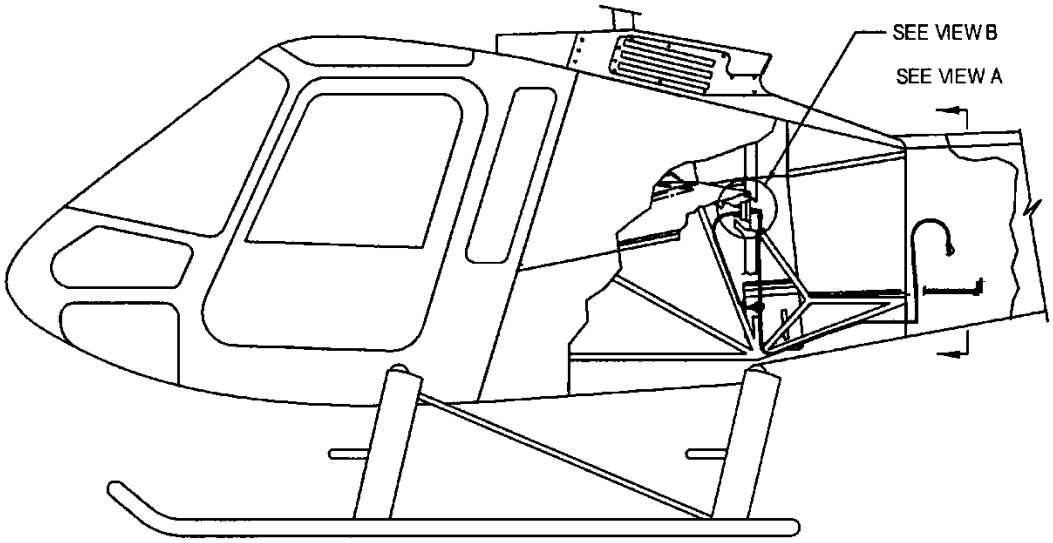

LOOKING LEFT

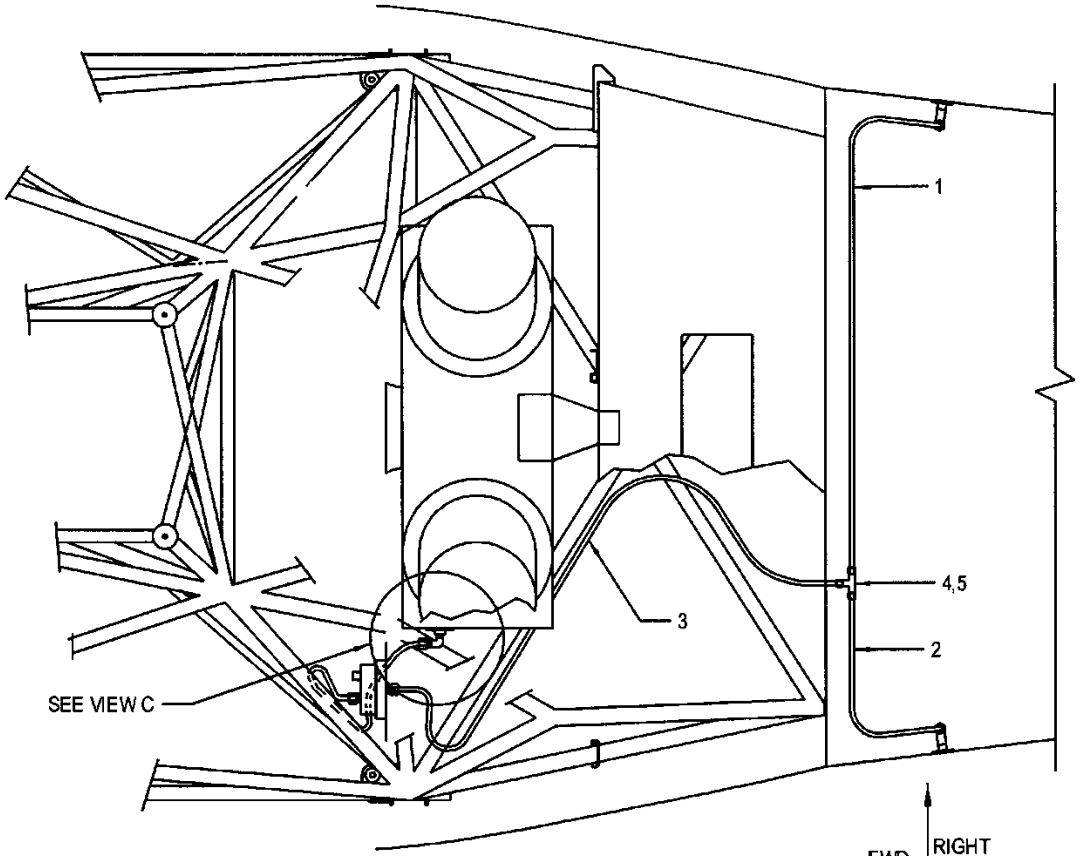

LOOKING DOWN

Sheet 1 of 2

FIGURE 10-27. ENGINE AIR INLET PRESSURE SYSTEM

UNCONTROLLED COPY WHEN DOWNLOADED OR PRINTED

Visit www.enstromhelicopter.com for instructions to order an original manual and to register for email notification of updates.

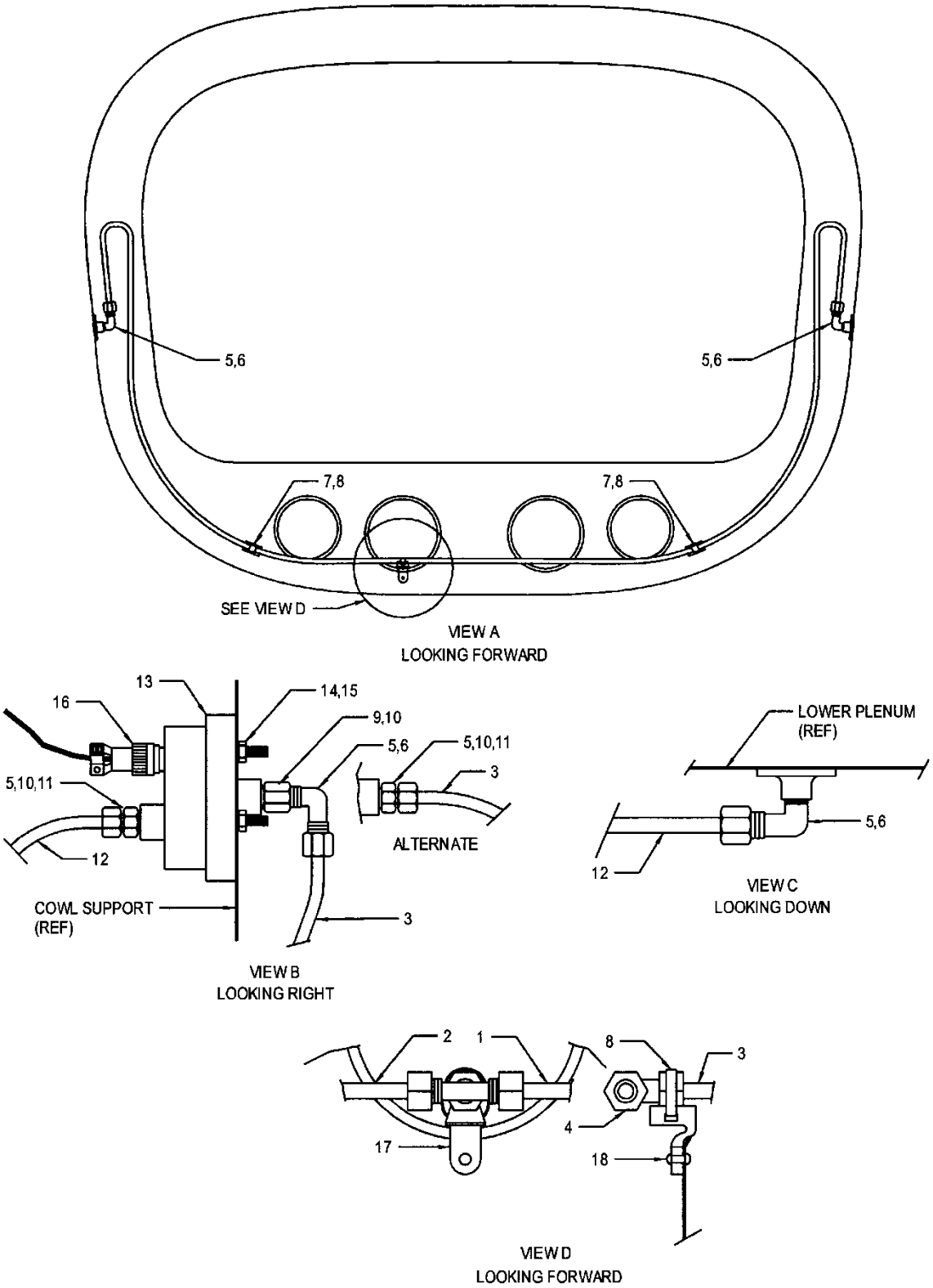

Sheet 2 of 2

FIGURE 10-27. ENGINE AIR INLET PRESSURE SYSTEM

UNCONTROLLED COPY WHEN DOWNLOADED OR PRINTED

Visit www.enstromhelicopter.com for instructions to order an original manual and to register for email notification of updates.

FIGURE 10-27. ENGINE AIR INLET PRESSURE SYSTEM

ITEM NUMBER	PART NUMBER	DESCRIPTION	QTY PER ASSY	EFFECTIVITY		
				TH-28	480	480B
1	4199019-15	. Static Line	1	X	X	X
2	4199019-17	. Static Line	1	X	X	X
3	4199019-19	. Static Line	1	X	X	X
4	264N4	. Tee	1	X	X	X
–	262N4	. . Nut and Sleeve Assembly	3	X	X	X
5	259N04	. Insert	8	X	X	X
6	269-N-04X04	. Elbow	4	X	X	X
–	262N4	. . Nut and Sleeve Assembly	1	X	X	X
7	PWMS-H25-C	. Stud Mount	2	X	X	X
8*	SST1M-MP	. Cable Tie	A/R	X	X	X
9	4199019-11	. Fitting	1	X	X	X
10	2-011	. O-Ring (E515-80)	2	X	X	X
11	4199019-13	. Fitting	1	X	X	X
–	262N4	. . Nut and Sleeve Assembly	1	X	X	X
12	4199019-21	. Static Line	1	X	X	X
13	SPDD2405	. Pressure Switch	1	X	X	X
13**	SPDD2415	. Pressure Switch	1			X
14	AN364-1032A	. Nut	3	X	X	X
15	AN960-10L	. Washer	3	X	X	X
16	MS3116F8-33S	. Connector	1	X	X	X
17	LHMS-S5-D	. Mount	1	X	X	X
18	SS-44F	. Rivet	1	X	X	X

* Secure to pylon at approximately 6 inch/15 cm intervals.

** 480B S/N: 5043 - 5046, 5048 and subsequent. Used with Donaldson particle separators.

UNCONTROLLED COPY WHEN DOWNLOADED OR PRINTED

Visit www.enstromhelicopter.com for instructions to order an original manual and to register for email notification of updates.

INTENTIONALLY LEFT BLANK

UNCONTROLLED COPY WHEN DOWNLOADED OR PRINTED

Visit www.enstromhelicopter.com for instructions to order an original manual and to register for email notification of updates.

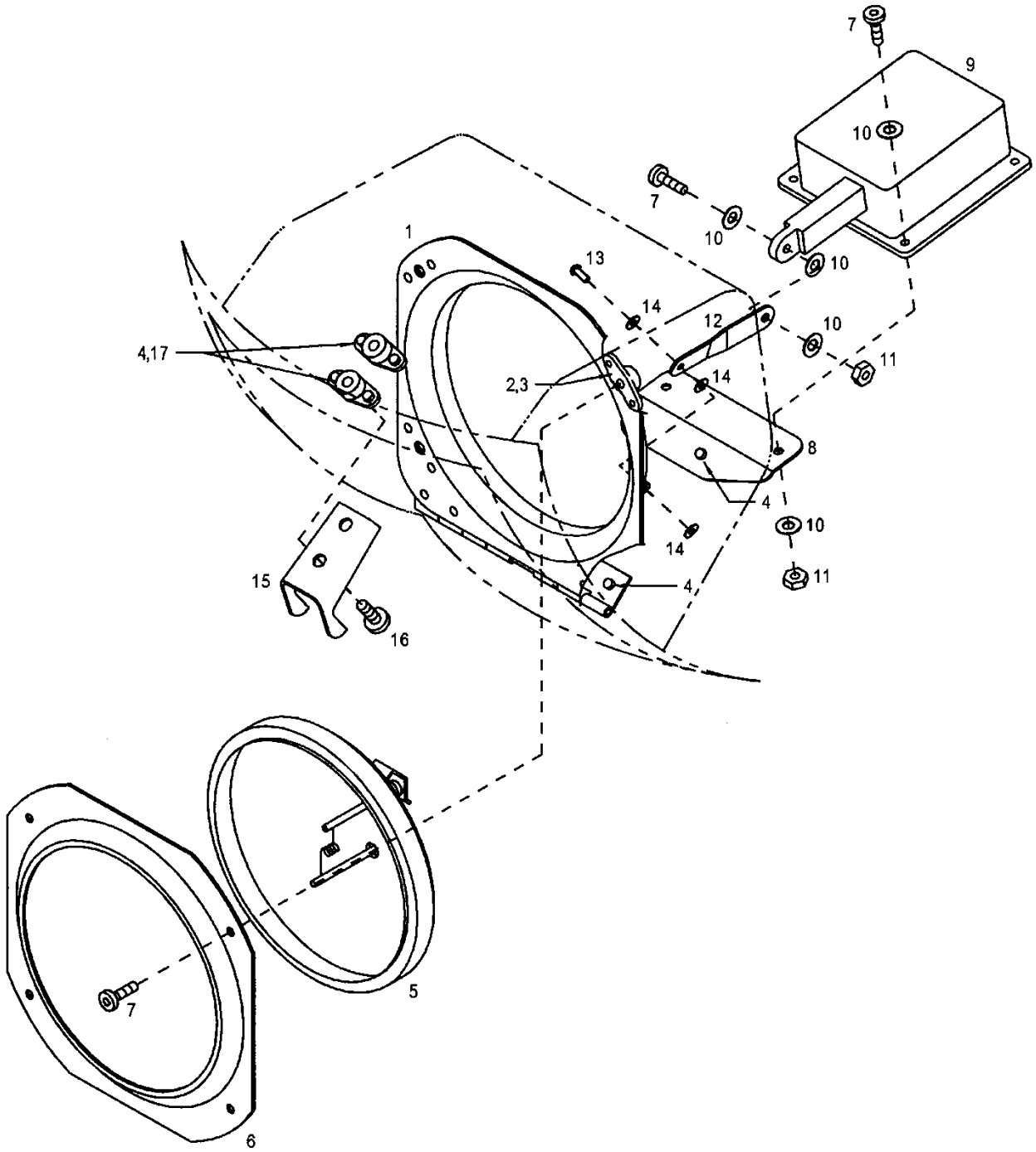

FIGURE 10-28. LANDING LIGHT ASSEMBLY INSTALLATION

UNCONTROLLED COPY WHEN DOWNLOADED OR PRINTED

Visit www.enstromhelicopter.com for instructions to order an original manual and to register for email notification of updates.

FIGURE 10-28. LANDING LIGHT ASSEMBLY INSTALLATION

ITEM NUMBER	PART NUMBER	DESCRIPTION	QTY PER ASSY	EFFECTIVITY		
				TH-28	480	480B
1	4212103-5	. Holder, Landing Light Lens	1		X	X
2*	NAS686A06K	. . Nut Plate	4	X	X	X
2	F22NA1-62	. . Nut Plate (Replaced by NAS686A06K)	4	X	X	X
3*	MS20426AD3-4	. . Rivet	6	X	X	X
3	MS20426AD3-3	. . Rivet (Replaced by MS20426AD3-4)	6	X	X	X
4*	MS20426AD3-6	. Rivet	4	X	X	X
5	4596	. Lamp, Landing	1	X	X	X
5	01-0771424-20	. Lamp, Landing, LED (Alternate)	1	X	X	X
6	28-21009-13	. Lens Clamp	1	X	X	X
7	AN526-632R8	. Screw	4	X	X	X
8	4212103-21	. Angle	1	X	X	X
9	T3-120-1	. Actuator, Landing Light	1	X	X	X
10*	AN960-6L	. Washer	2	X	X	X
10	AN960D8L	. Washer (Replaced by AN960-6L)	2	X	X	X
11	AN364-632A	. Nut	2	X	X	X
12	4212103-19	. Link	1	X	X	X
13	MS20615-3M4	. Rivet	1	X	X	X
14	AN960D3L	. Washer	3	X	X	X
15	4212104-11	. Stop, Landing Light	1	X	X	X
16	AN526-832R8	. Screw	2	X	X	X
17*	NAS686A08K	. Nut Plate	2	X	X	X
17	NAJ1-82-BC	. Nut Plate (Replaced by NAS686A08K)	2	X	X	X
–	506	. Adhesive: Structural Acrylic	1	X	X	X

* Effectivity 480/480B SN 5148 and subsequent.

UNCONTROLLED COPY WHEN DOWNLOADED OR PRINTED

Visit www.enstromhelicopter.com for instructions to order an original manual and to register for email notification of updates.

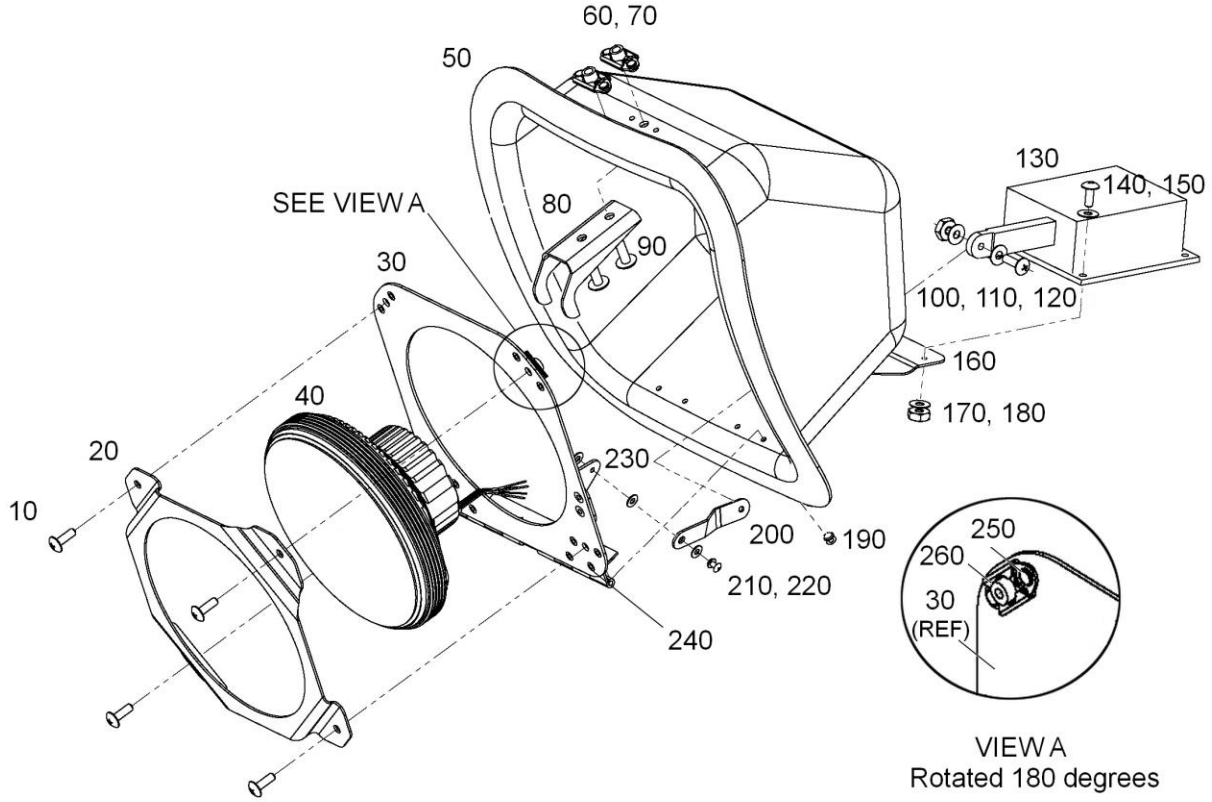

FIGURE 10-29. LED LANDING LIGHT ASSEMBLY INSTALLATION

UNCONTROLLED COPY WHEN DOWNLOADED OR PRINTED

Visit www.enstromhelicopter.com for instructions to order an original manual and to register for email notification of updates.

FIGURE 10-29. LED LANDING LIGHT ASSEMBLY INSTALLATION

ITEM NUMBER	PART NUMBER	DESCRIPTION	QTY PER ASSY	EFFECTIVITY		
				TH-28	480	480B
–†	4212101-9	Landing Light Housing Install	REF		X	X
–	4212101-5	Landing Light Housing Install (Superseded by 4212101-9)	REF		X	X
–†	4212101-101	Housing Assembly	REF		X	X
–	4212101-7	Housing Assembly (Superseded by 4212101-101)	REF		X	X
10	AN526-632R7	. Screw	4		X	X
–	4212103-7	. Lens Holder Assembly	1		X	X
–	4212103-5	. Lens Holder Assembly (Superseded by 4212103-7)	1		X	X
20†	4212103-31	. . Bezel Clamp	1		X	X
20	4212103-25	. . Bezel Clamp (Superseded by 4212103-31)	1		X	X
30◊	4212103-35	. Hinged Holder, Plate	1		X	X
30Δ	4212103-33	. Hinged Holder, Plate (Superseded by 4212103-35)	1		X	X
30	4212103-29	. Hinged Holder, Plate (Superseded by 4212103-35)	1		X	X
40°	01-1030-H-A-P Rev C	. Sunspot 36 HX – Landing (Alternate)	1		X	X
40**	01-1030-H-A-P Rev B	. Sunspot 36 HX – Landing (Alternate)	1		X	X
40†	01-1030-H-A-P Rev A	. Sunspot 36 HX – Landing	1		X	X
40	01-1030-H-A-P	. Lamp, Landing, LED 36X - Obsolete (Superseded by 01-1030-H-A-P Rev A)	1		X	X
–	60618-1	. . Contact, Pin	2		X	X
–	1-480319-0	. . Housing, Cap	1		X	X
50	4212102-11	. Housing	1		X	X
60	NAS686A06K	. Nut Plate	4		X	X
70	MS20426AD3-4	. . Rivet	8		X	X
80	4212104-13	. Stop, Landing Light	1		X	X
90	AN526-832R8	. Screw	2		X	X
100	AN526-632R8	. Screw	1		X	X
110	AN960-6L	. Washer	2		X	X
120	AN364-632A	. Nut	1		X	X
130	T3-120-1	. Actuator, Landing Light	1		X	X
140	AN526-632R	. Screw	2		X	X
150	AN960-6L	. Washer	2		X	X
160	4212103-21	. Angle	1		X	X

UNCONTROLLED COPY WHEN DOWNLOADED OR PRINTED

Visit www.enstromhelicopter.com for instructions to order an original manual and to register for email notification of updates.

FIGURE 10-29. LED LANDING LIGHT ASSEMBLY INSTALLATION

ITEM NUMBER	PART NUMBER	DESCRIPTION	QTY PER ASSY	EFFECTIVITY		
				TH-28	480	480B
170	AN960-6L	. Washer	2		X	X
180	AN364-632A	. Nut	2		X	X
190	MS20470A3-4	. Rivet	4		X	X
200	4212103-23	. Link	1		X	X
210	MS20615-3M4	. Rivet	1		X	X
220	AN960D3L	. Washer	3		X	X
230	4212103-27	. Tab	1		X	X
240	MS20426A3-5	. Rivet	4		X	X
250	MS20426AD3-4	. Rivet	8		X	X
260	NAS686A06K	. . Nut Plate	2		X	X
–	506	. Adhesive: Structural Acrylic	1		X	X
–	4199005-901	Landing Light Sun Spot with Connector (Obsolete – Superseded by 01-1030-H-A-P)	1		X	X

* These parts comprise the Landing Light Sun Spot with Connector Kit. The kit comes assembled.

† Effectivity 480B S/N 5168 and subsequent.

◊ Effectivity 480B S/N 5246 and subsequent. Retrofittable to 480B S/N 5042 and subsequent if equipped with 01-1030-H-A-P Rev C.

Δ Effectivity 480B S/N 5168 and subsequent. (See also SIL T-060, latest revision, if equipped with 01-1030-H-A-P Rev C.)

** Effectivity 480B S/N 5207 and subsequent. Retrofittable to 480 S/N 5001 – 5041 and 480B S/N 5042 and subsequent.

° Effectivity 480B S/N 5233 and subsequent. Retrofittable to 480 S/N 5001 – 5041 and 480B S/N 5042 and subsequent.

UNCONTROLLED COPY WHEN DOWNLOADED OR PRINTED

Visit www.enstromhelicopter.com for instructions to order an original manual and to register for email notification of updates.

INTENTIONALLY LEFT BLANK

UNCONTROLLED COPY WHEN DOWNLOADED OR PRINTED

Visit www.enstromhelicopter.com for instructions to order an original manual and to register for email notification of updates.

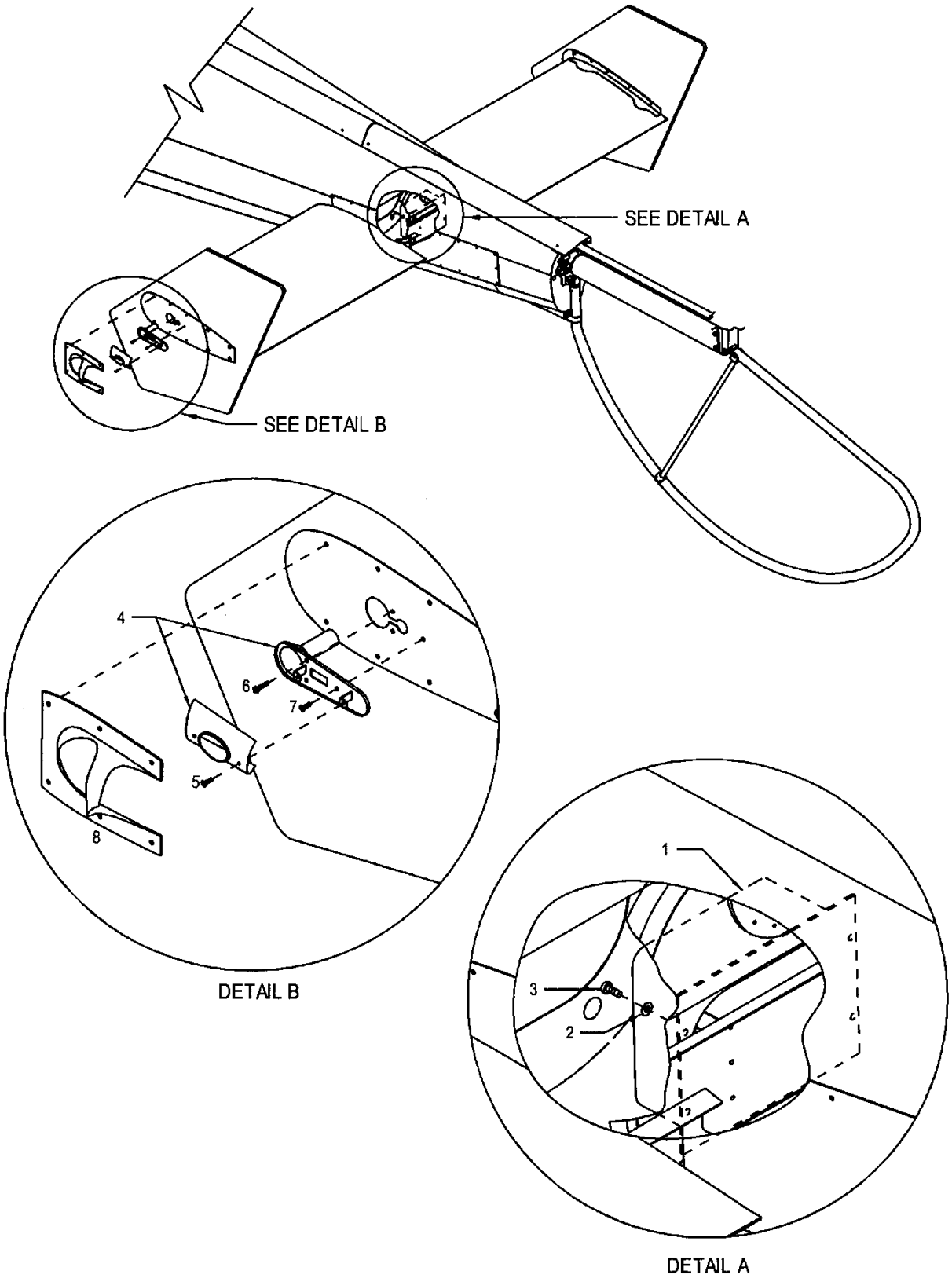

FIGURE 10-30. POSITION/ANTI-COLLISION LIGHT INSTALLATION

UNCONTROLLED COPY WHEN DOWNLOADED OR PRINTED

Visit www.enstromhelicopter.com for instructions to order an original manual and to register for email notification of updates.

FIGURE 10-30. POSITION/ANTI-COLLISION LIGHT INSTALLATION

ITEM NUMBER	PART NUMBER	DESCRIPTION	QTY PER ASSY	EFFECTIVITY		
				TH-28	480	480B
1	01-0770028-05	. Power Supply	1	X	X	X
1	A413AHDACF-14/28	. Power Supply (Replaced with 01-0770028-05)	1	X	X	X
2	MS35206-244	. Screw	4	X	X	X
3	AN960-8L	. Washer	4	X	X	X
4	01-0790006-01	. Green Forward Position Light, Clear Tail Position Light, and Clear Anti-Collision Light Assembly, See Figure 10-31 for breakdown	1	X	X	X
4	A600-PG-28	. Position/Strobe Light Assembly (Green), RH (Alternate)	1	X	X	X
4	01-0790340-03	. LED Green Forward Position Light, LED Clear Tail Position Light, and Strobe Anti-Collision Light Assembly (Alternate)	1	X	X	X
4	01-0790006-03	. Red Forward Position Light, Clear Tail Position Light, and Clear Anti-Collision Light Assembly, See Figure 10-31 for breakdown	1	X	X	X
4	A600-PR-28	. Position/Strobe Light Assembly (Red), LH (Alternate)	1	X	X	X
4	01-0790340-04	. LED Red Forward Position Light, LED Clear Tail Position Light, and Strobe Anti-Collision Light Assembly (Alternate)	1	X	X	X
5	AN507-632R4	. . Screw	2	X	X	X
6	AN526-632R10	. Screw	4	X	X	X
7	AN507-632R7	. Screw	2	X	X	X
8*	4200017-1	. Light Shield, L/H	1	X	X	X
8*	4200017-2	. Light Shield, R/H	1	X	X	X

* See Figure 3-4 for installation hardware.

UNCONTROLLED COPY WHEN DOWNLOADED OR PRINTED

Visit www.enstromhelicopter.com for instructions to order an original manual and to register for email notification of updates.

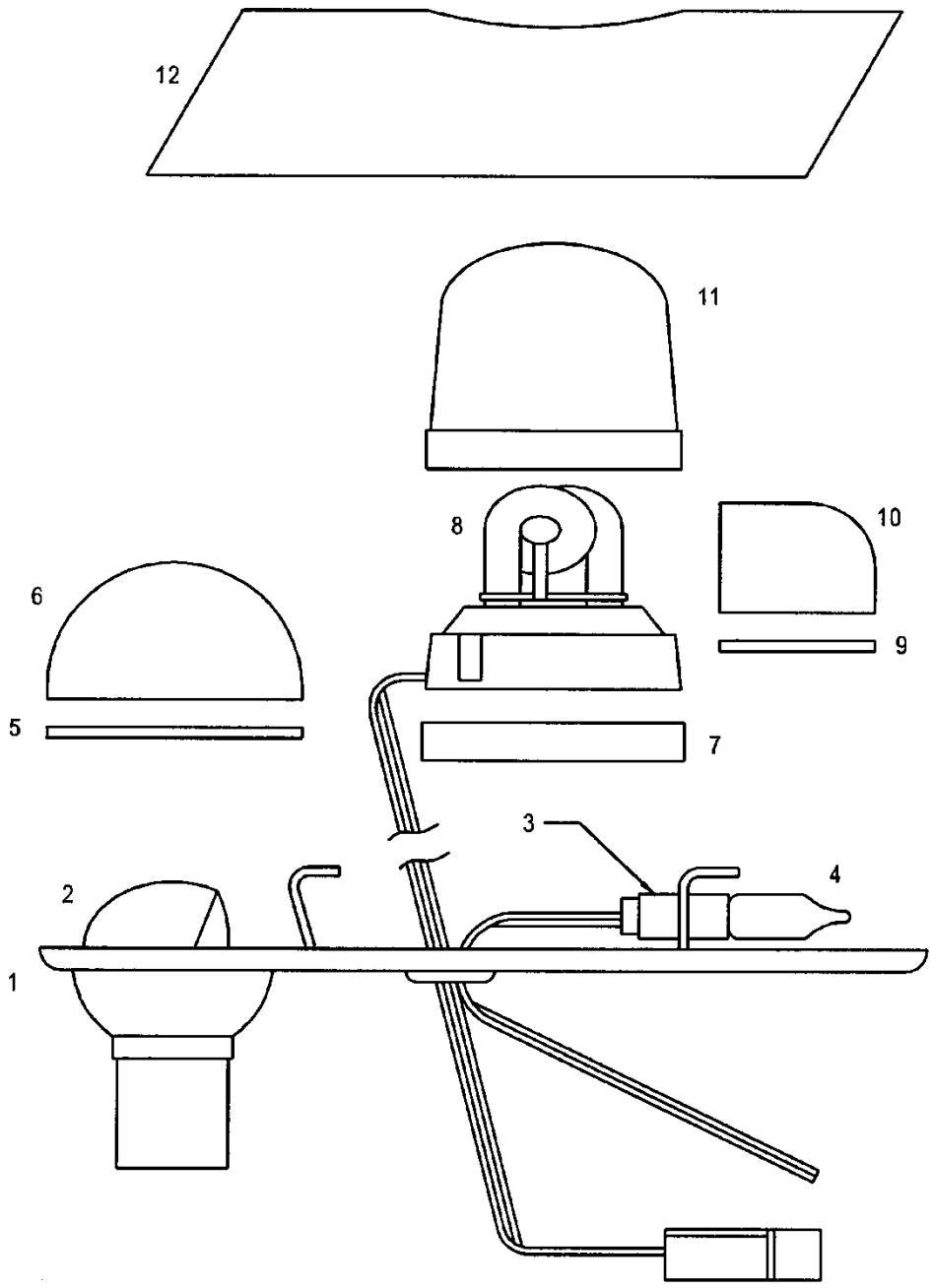

FIGURE 10-31. POSITION/ANTI-COLLISION LIGHT ASSEMBLY

UNCONTROLLED COPY WHEN DOWNLOADED OR PRINTED

Visit www.enstromhelicopter.com for instructions to order an original manual and to register for email notification of updates.

FIGURE 10-31. POSITION/ANTI-COLLISION LIGHT ASSEMBLY

ITEM NUMBER	PART NUMBER	DESCRIPTION	QTY PER ASSY	EFFECTIVITY		
				TH-28	480	480B
–*	01-0790006-03	. Red Forward Position Light, Clear Tail Position Light, and Clear Anti-Collision Light Assembly	1	X	X	X
–*	A600-PR-28	. Position/Strobe Light Assembly (Red) LH Alternate	1	X	X	X
–*	01-0790006-01	. Green Forward Position Light, Clear Tail Position Light, and Clear Anti-Collision Light Assembly	1	X	X	X
–*	A600-PG-28	. Position/Strobe Light. Assembly (Green) RH Alternate	1	X	X	X
1*	02-0350259-00	. . Base Plate Assembly	1	X	X	X
1*	A605	. . Base Plate Assembly (Alternate)	1	X	X	X
2*	34-0428020-65	. . Lamp, Reflector 28V 26W	1	X	X	X
2*	W1290-28	. . Lamp, Reflector 28V 26W (Alternate)	1	X	X	X
3*	02-0350260-00	. . Socket Assembly	1	X	X	X
3*	A507	. . Socket Assembly (Alternate)	1	X	X	X
4*	34-0428070-64	. . Lamp 28V	1	X	X	X
4*	A508-28	. . Lamp (Alternate)	1	X	X	X
5*	38-0230021-00	. . Gasket, Position Light Lens	1	X	X	X
5*	W1283	. . Gasket (Alternate)	1	X	X	X
6*	68-4230020-40	. . Lens, Green Position Light RH	1	X	X	X
6*	W1284-G	. . Lens, Green Position Light (Alternate) RH	1	X	X	X
6*	68-4230020-50	. . Lens, Red Position Light LH	1	X	X	X
6*	W1284-R	. . Lens, Red Position Light (Alternate) LH	1	X	X	X
7*	38-0130107-00	. . Gasket, 4 1/4” Spacer	1	X	X	X
7*	A427-4	. . Spacer (Alternate)	1	X	X	X
8*	02-0250276-00	. . Strobe Tube Assembly	1	X	X	X
8*	A610	. . Flash Tube Assembly (Alternate)	1	X	X	X
9*	38-0130090-00	. . Gasket/Spacer	1	X	X	X
9*	A616	. . Spacer (Alternate)	1	X	X	X
10*	68-4250066-30	. . Lens, Clear	1	X	X	X
10*	A615	. . Lens (Alternate)	1	X	X	X
11*	68-2290005-30	. . Lens, Clear	1	X	X	X
11*	A612	. . Lens (Alternate)	1	X	X	X
12*	19-170049-009	. . Lens Retainer	1	X	X	X
12*	A606	. . Retainer (Alternate)	1	X	X	X

* Obtain parts from Whelen Engineering Company, Inc.

UNCONTROLLED COPY WHEN DOWNLOADED OR PRINTED

Visit www.enstromhelicopter.com for instructions to order an original manual and to register for email notification of updates.

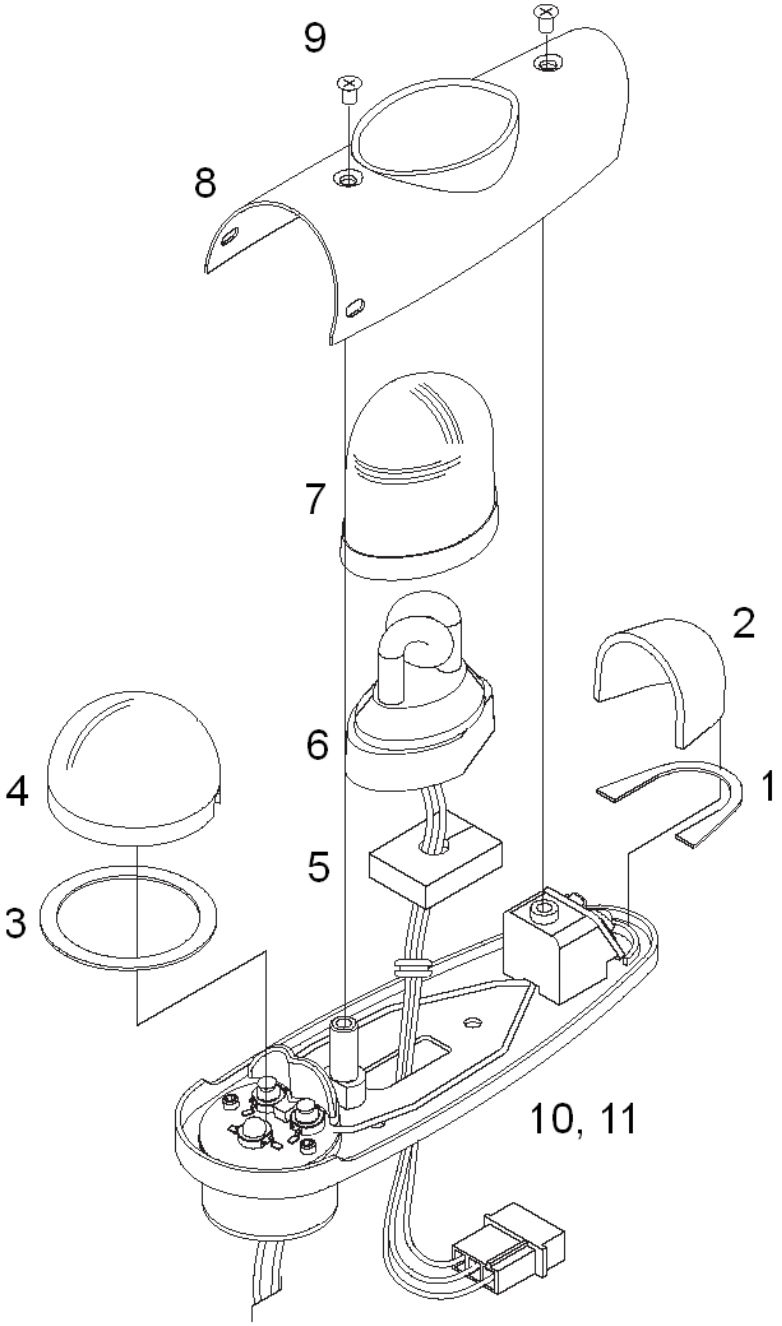

FIGURE 10-32. POSITION/ANTI-COLLISION LED LIGHT ASSEMBLY

UNCONTROLLED COPY WHEN DOWNLOADED OR PRINTED

Visit www.enstromhelicopter.com for instructions to order an original manual and to register for email notification of updates.

FIGURE 10-32. LED POSITION/ANTI-COLLISION LIGHT ASSEMBLY

ITEM NUMBER	PART NUMBER	DESCRIPTION	QTY PER ASSY	EFFECTIVITY		
				TH-28	480	480B
1*	38-0250901-00	. . Gasket	1	X	X	X
2*	68-3950903A30	. . Lens, Clear Tail Position Light	1	X	X	X
3*	38-0230021-01	. . Gasket	1	X	X	X
4*	68-3950902A30	. . Lens, Clear Forward Position Light	1	X	X	X
5*	38-0130878-01	. . Gasket	1	X	X	X
6*	36-0050626-01	. . Flash Tube Assembly	1	X	X	X
7*	68-2290005-34	. . Lens, Clear/Coated	1	X	X	X
8*	19-170049-010	. . Retainer	1	X	X	X
9*	14-0050508-27	. . Screw	2	X	X	X
10*	01-0790340-03	. LED Green Forward Position Light, LED Clear Tail Position Light, and Strobe Anti-Collision Light Assembly	1	X	X	X
11*	01-0790340-04	. LED Red Forward Position Light, LED Clear Tail Position Light, and Strobe Anti-Collision Light Assembly	1	X	X	X

* Obtain parts from Whelen Engineering Company, Inc.

UNCONTROLLED COPY WHEN DOWNLOADED OR PRINTED

Visit www.enstromhelicopter.com for instructions to order an original manual and to register for email notification of updates.

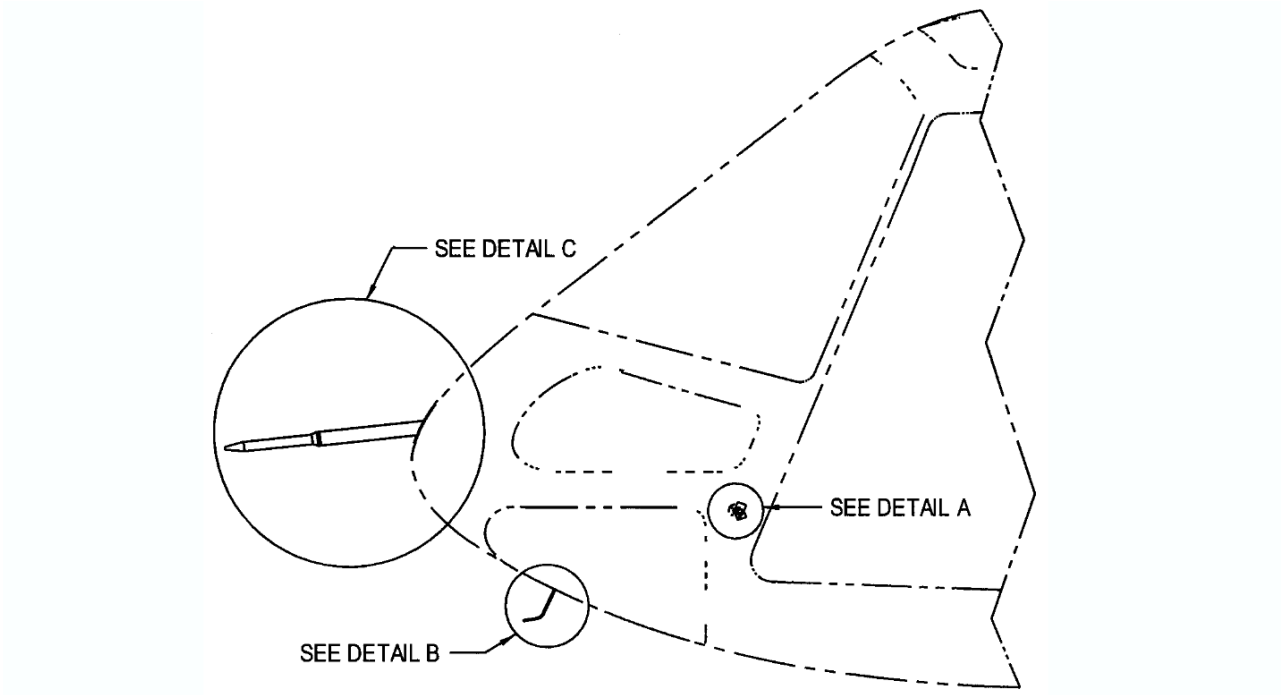

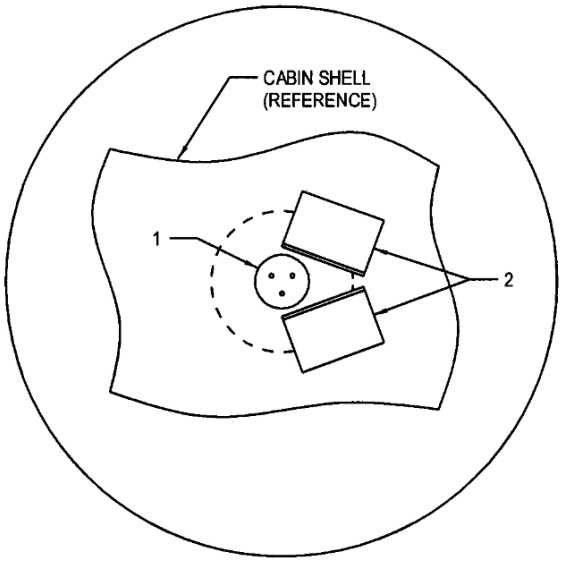

DETAIL A

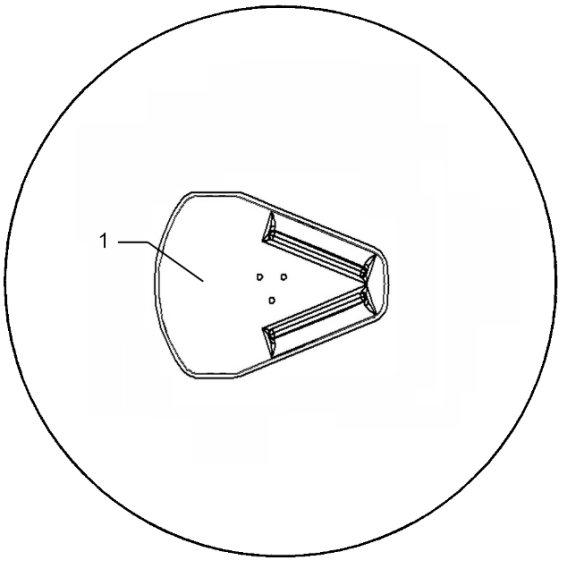

DETAIL A
S/N 5147 AND SUBSEQUENT.
SUITABLE FOR 5001 AND SUBSEQUENT

Sheet 1 of 2

FIGURE 10-33. STATIC PORT AND PITOT TUBE INSTALLATION

UNCONTROLLED COPY WHEN DOWNLOADED OR PRINTED

Visit www.enstromhelicopter.com for instructions to order an original manual and to register for email notification of updates.

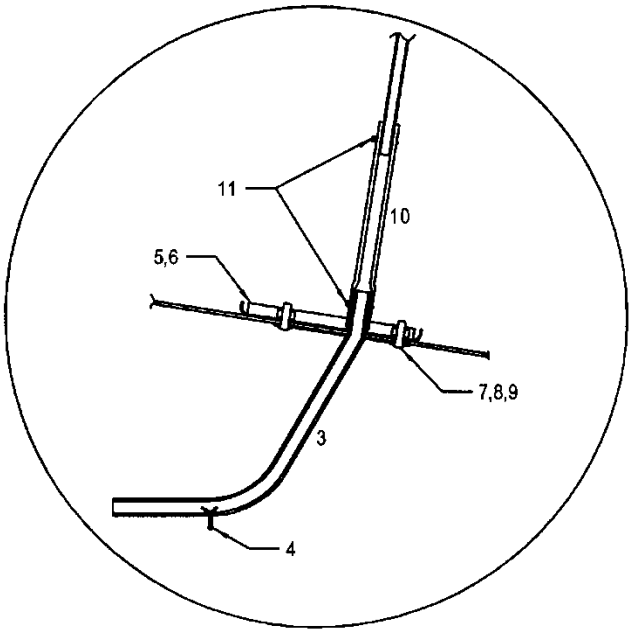

DETAIL B

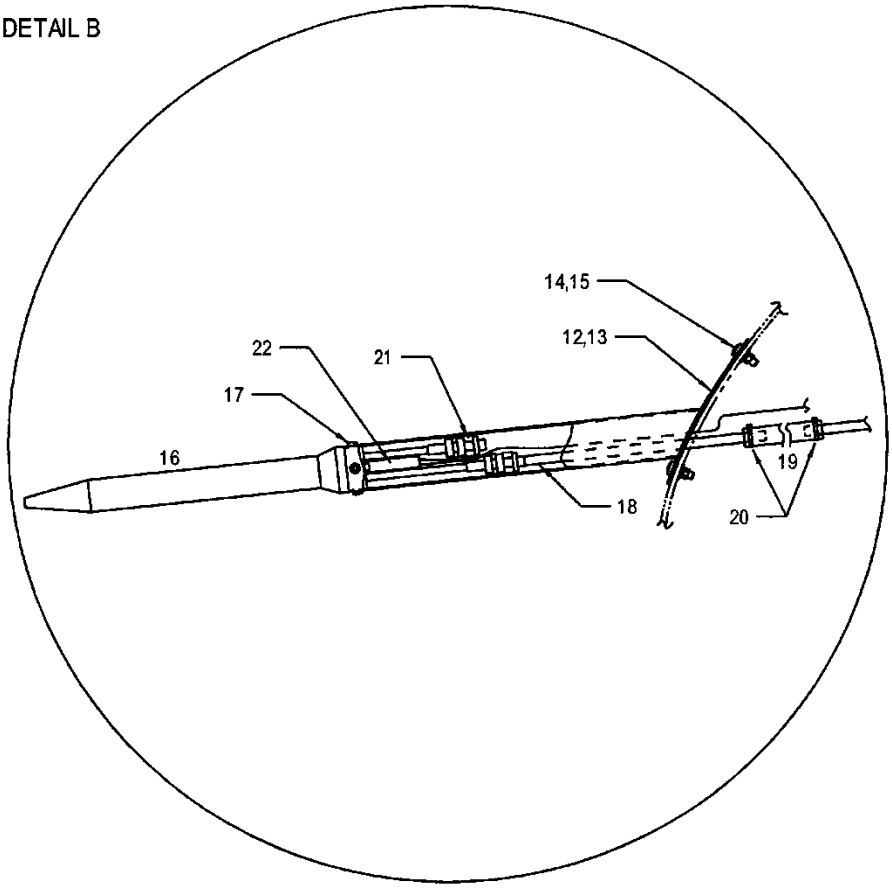

DETAIL C

Sheet 2 of 2

FIGURE 10-33. STATIC PORT AND PITOT TUBE INSTALLATION

UNCONTROLLED COPY WHEN DOWNLOADED OR PRINTED

Visit www.enstromhelicopter.com for instructions to order an original manual and to register for email notification of updates.

FIGURE 10-33. STATIC PORT AND PITOT TUBE INSTALLATION

ITEM NUMBER	PART NUMBER	DESCRIPTION	QTY PER ASSY	EFFECTIVITY		
				TH-28	480	480B
–	4199003-103	Static Air/Pitot Tube Installation	REF	X	X	X
1†	4182310-21	. Static Port	2		X	X
–†	Weld-On 45	. . Structural Adhesive (Use with 4182310-21)	1		X	X
1	4182310-13	. Static Port Fitting (Alternate)	2	X	X	X
2	4182310-15	. Gate (Use with 4182310-13)	4	X	X	X
–	4182310-17	. . Shim (Use with 4182310-13)	AR	X	X	X
–	4182310-19	. . Shim (Use with 4182310-13)	AR	X	X	X
–	506	. . Structural Adhesive (Use with 4182310-13)	1	X	X	X
3	4199041-1	. Pitot Tube Assembly	1	X	X	X
4●	MS24665-151	. . Cotter Pin	1	X	X	X
4	AN381-3-8	. . Cotter Pin (Replaced by MS24665-151)	1	X	X	X
5	4199041-13	. Shim	1	X	X	X
6	28-11121-7	. Stiffener	1	X	X	X
7	AN525-832R8	. Screw	4	X	X	X
8†	AN960D8L	. Washer	4	X	X	X
8	AN960-8	. Washer (Replaced by AN960D8L)	4	X	X	X
9	AN364-832A	. Nut	4	X	X	X
10	28-11121-4	. Tubing	1	X	X	X
11†	SST2S-MP	. Cable Tie	2	X	X	X
11	SST1.5I-MP	. Cable Tie (Replaced by SST2S-MP)	2	X	X	X
12*†	4196536-5	. Sleeve Weldment (Supersedes 4196536-1)	1	X	X	X
12*	4196536-1	. Sleeve Assembly (Superseded)	1	X	X	X
13*†	732-RTV	. Sealant: Rubber, Clear Silicone	1	X	X	X
13*†	4508-1	. Foam Tape (No longer used)	A/R	X	X	X
14*±	MS5198-26	. Screw	4	X	X	X
14*	MS27039-1-09	. Screw (Replaced by MS5198-26)	4	X	X	X
15*●	S10P175	. PlusNut	4	X	X	X
–●	MS35333-40	. Lock Washer	4	X	X	X
16*	AN5816-2	. Pitot: Heated 28 Volts	1	X	X	X
17*●	MS51958-26	. Screw	4	X	X	X
17*	MS35207-225	. Screw (Replaced by MS51958-26)	4	X	X	X
–*	MS35338-136	. Lock Washer	4	X	X	X
18*†	4196536-25	. Tube, Heated Pitot	1	X	X	X
18*	4199003-101	. Pitot Line Assembly (Superseded by 4196536-25)	1	X	X	X

UNCONTROLLED COPY WHEN DOWNLOADED OR PRINTED

Visit www.enstromhelicopter.com for instructions to order an original manual and to register for email notification of updates.

FIGURE 10-33. STATIC PORT AND PITOT TUBE INSTALLATION

ITEM NUMBER	PART NUMBER	DESCRIPTION	QTY PER ASSY	EFFECTIVITY		
				TH-28	480	480B
–*	4199003-11	. . Isolator, Rubber	1	X	X	X
–*	AN818-4D	. . Nut	1	X	X	X
–*	MS20819-4D	. . Sleeve	1	X	X	X
19*	28-11121-4	. Hose	1	X	X	X
20*†	SST2S-MP	. Cable Tie	2	X	X	X
20*	SST1.5I-MP	. Cable Tie (Replaced by SST2S-MP)	2	X	X	X
21*†	AN929-4D	. Cap (Now a part of Pitot Tube AN5816-2)	1	X	X	X
22*	AN3115-1	. Connector	1	X	X	X
–*	7270-1-7 1/2	. Circuit Breaker 7 1/2 Amp, Toggle	1	X	X	X

* Optional heated pitot tube installation.

± Effectivity 5092 and subsequent.

• Effectivity 5127 and subsequent.

† Effectivity 5147 and subsequent.

UNCONTROLLED COPY WHEN DOWNLOADED OR PRINTED

Visit www.enstromhelicopter.com for instructions to order an original manual and to register for email notification of updates.

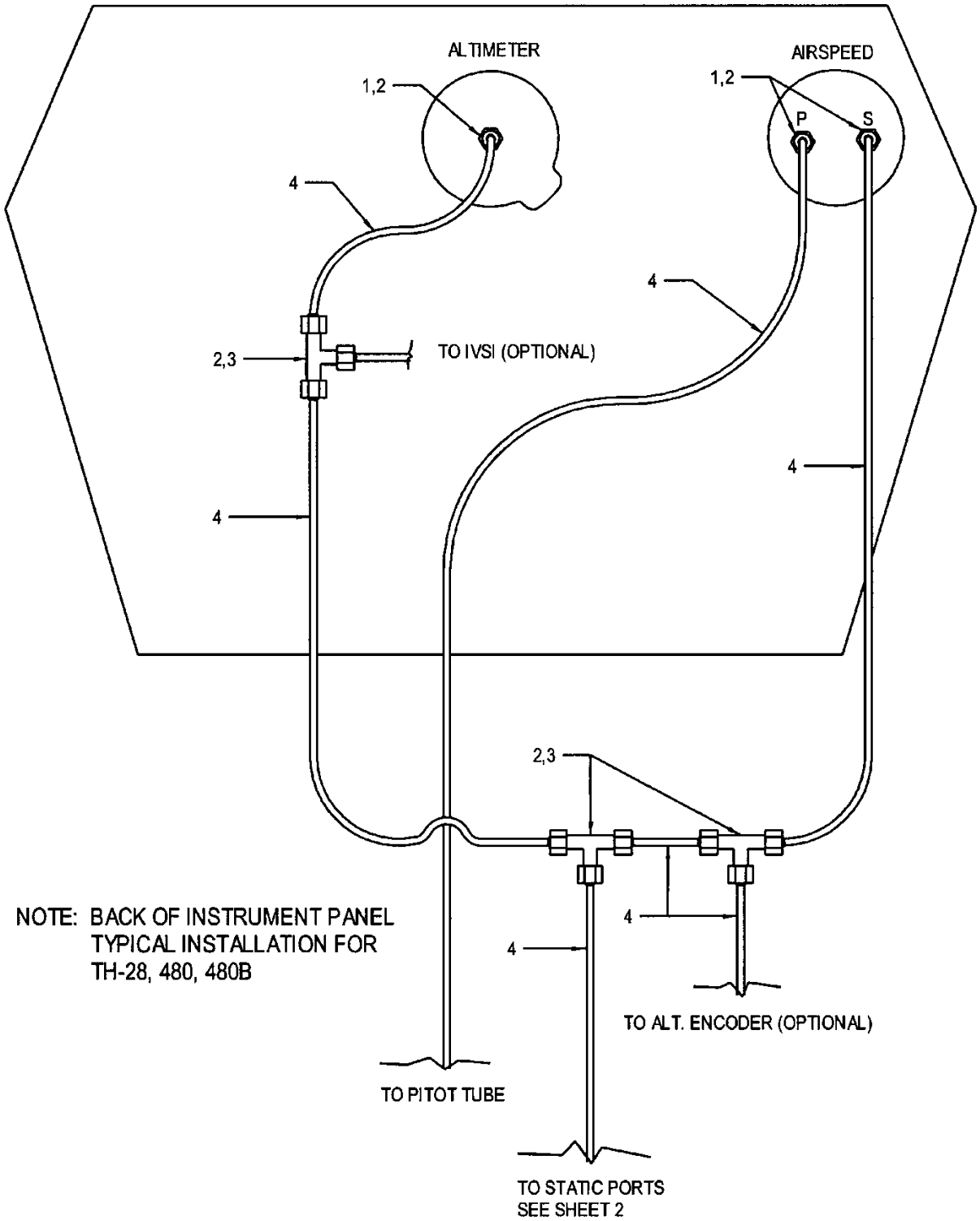

Sheet 1 of 2

FIGURE 10-34. STATIC AND PITOT LINE INSTALLATION

UNCONTROLLED COPY WHEN DOWNLOADED OR PRINTED

Visit www.enstromhelicopter.com for instructions to order an original manual and to register for email notification of updates.

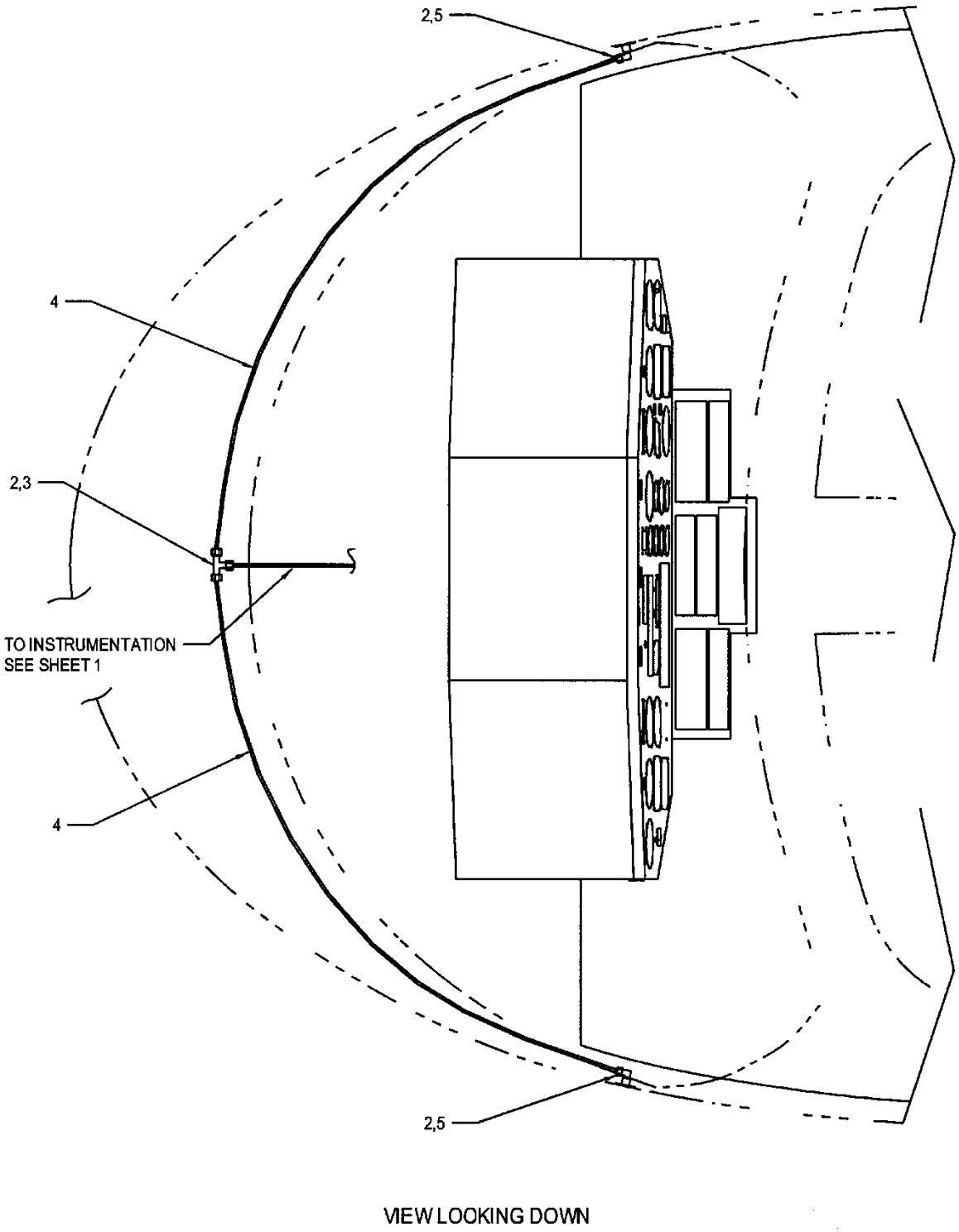

Sheet 2 of 2

FIGURE 10-34. STATIC AND PITOT LINE INSTALLATION

UNCONTROLLED COPY WHEN DOWNLOADED OR PRINTED

Visit www.enstromhelicopter.com for instructions to order an original manual and to register for email notification of updates.

FIGURE 10-34. STATIC AND PITOT LINE INSTALLATION

ITEM NUMBER	PART NUMBER	DESCRIPTION	QTY PER ASSY	EFFECTIVITY		
				TH-28	480	480B
1≡	268N04X02	. Adapter	3*	X	X	X
1≡	219N04X02	. . Nut and Sleeve Assembly	1	X	X	X
2≡	259N04	. Insert	11*	X	X	X
3≡	264N04	. Union Tee	2*	X	X	X
–≡	261N04X02	. . Nut and Sleeve Assembly	1	X	X	X
4	520-006	. Tube: 0.250" Black	A/R	X	X	X
5≡	269N04X02	. Male Elbow	2	X	X	X
–≡	261N04X02	. . Nut and Sleeve Assembly	1	X	X	X

* The quantities listed only correspond to “Standard” equipment installations. “Optional” equipment installations (IVSI, Blind Encoder, etc.) will require adjustments to the quantities listed.

≡ See Appendix A for equivalent part information.

UNCONTROLLED COPY WHEN DOWNLOADED OR PRINTED

Visit www.enstromhelicopter.com for instructions to order an original manual and to register for email notification of updates.

INTENTIONALLY LEFT BLANK

UNCONTROLLED COPY WHEN DOWNLOADED OR PRINTED

Visit www.enstromhelicopter.com for instructions to order an original manual and to register for email notification of updates.

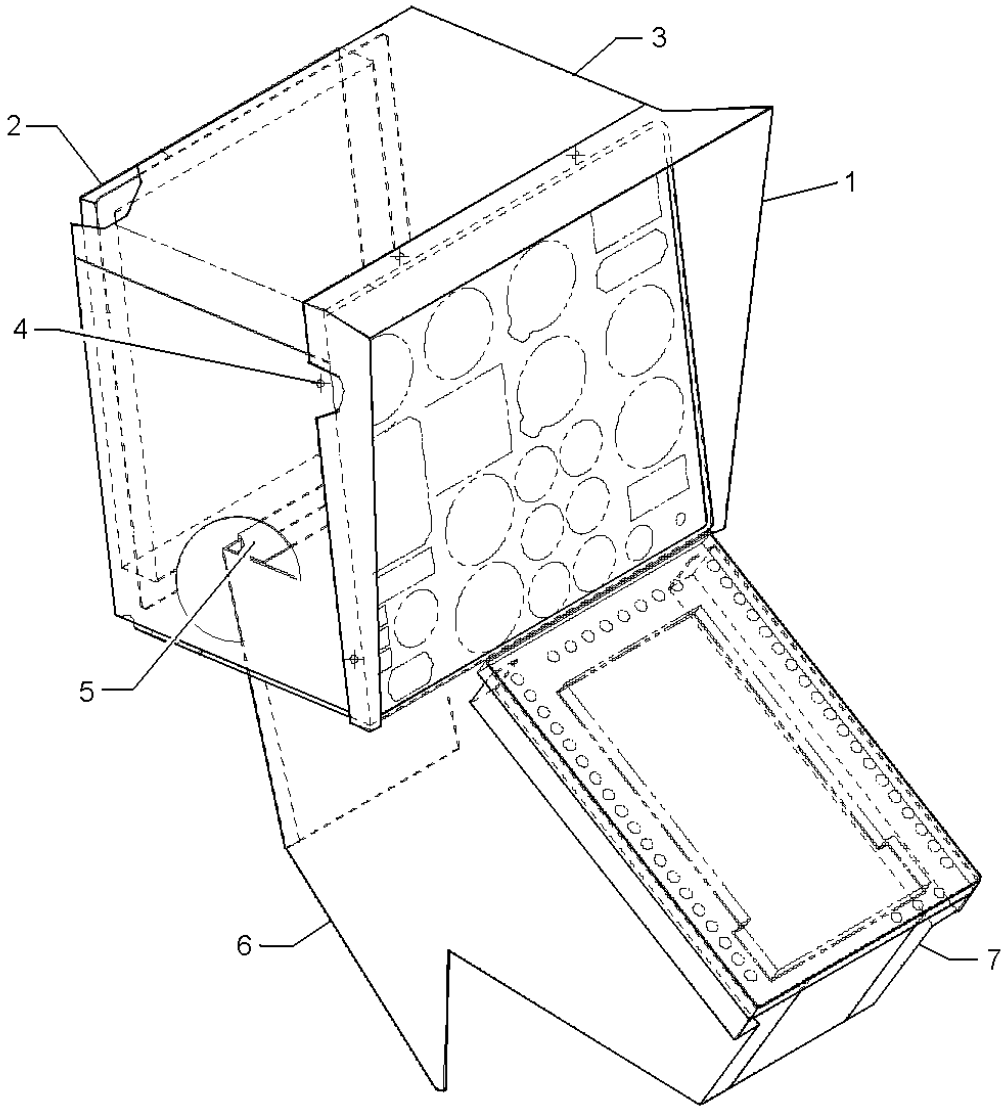

FIGURE 10-35. INSTRUMENT CONSOLE SHROUD INSTALLATION

UNCONTROLLED COPY WHEN DOWNLOADED OR PRINTED

Visit www.enstromhelicopter.com for instructions to order an original manual and to register for email notification of updates.

FIGURE 10-35. INSTRUMENT CONSOLE SHROUD INSTALLATION

ITEM NUMBER	PART NUMBER	DESCRIPTION	QTY PER ASSY	EFFECTIVITY		
				TH-28	480	480B
1	4119865-5	. Visor Assembly	1	X	X	X
1**	4119865-7	. Visor Assembly (alternate)	1			X
2	4119887-911	. Back Shroud with Velcro Attachment	1	X	X	X
–	ECD4089-11	. . Velcro Hook, 1.0”	A/R	X	X	X
–	ECD4089-15	. . Velcro Loop, 1.0”	A/R	X	X	X
2	4119887-11	. Back Shroud	1	X	X	X
2*	4119887-13	. Back Shroud	1	X	X	X
3	4119893-3	. Shroud Assembly	1	X	X	X
4	AN526-632R6	. Screw	6	X	X	X
5	4115000-1	. Shroud Assembly	1	X	X	X
6	4119890-7	. Lower Console Shroud (L/H)	1	X	X	X
7	4119890-6	. Lower Console Shroud (R/H)	1	X	X	X
–	SJ-3526	. Hook Fastener	A/R	X	X	X
–	SJ-3527	. Loop Fastener	A/R	X	X	X

* For aircraft equipped with air conditioner P/N 4220176.

** Reduced profile side visor.

UNCONTROLLED COPY WHEN DOWNLOADED OR PRINTED

Visit www.enstromhelicopter.com for instructions to order an original manual and to register for email notification of updates.

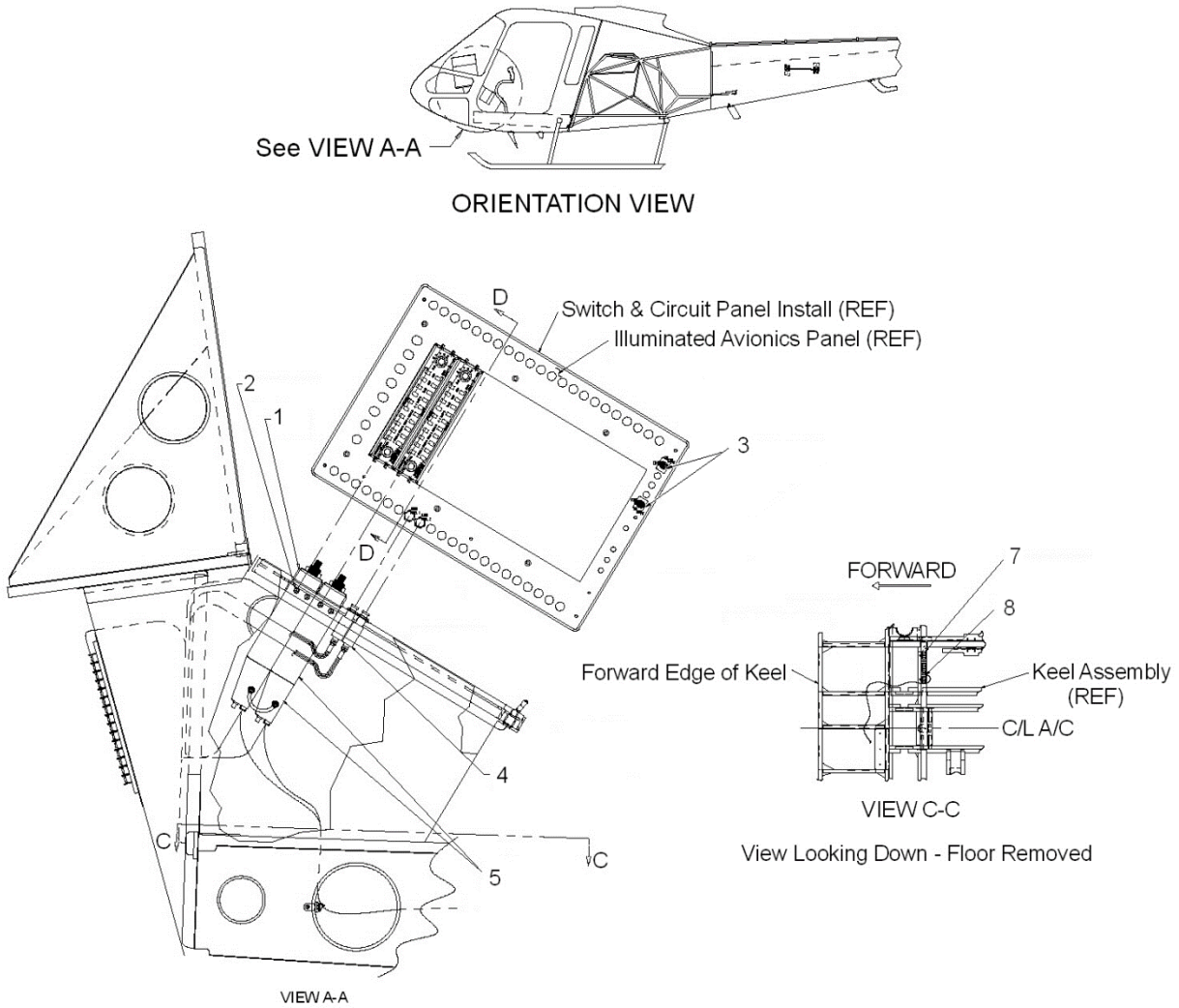

Sheet 1 of 2

FIGURE 10-36. KMA 24H-71 AUDIO PANEL INSTALLATION

UNCONTROLLED COPY WHEN DOWNLOADED OR PRINTED

Visit www.enstromhelicopter.com for instructions to order an original manual and to register for email notification of updates.

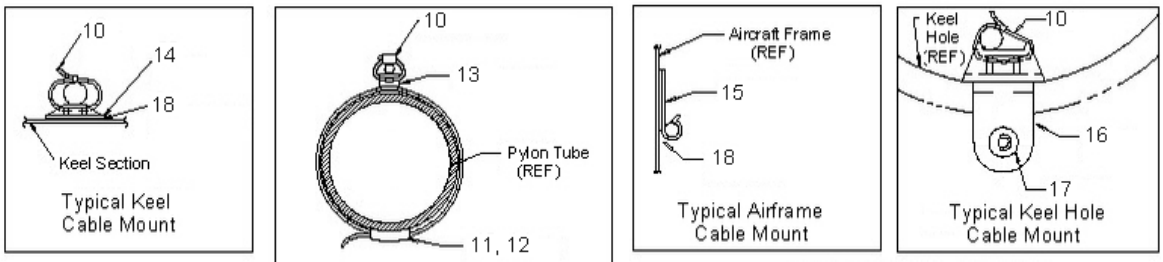

Cable Mounting Details
Mount approximately 8-12 inches apart as required.

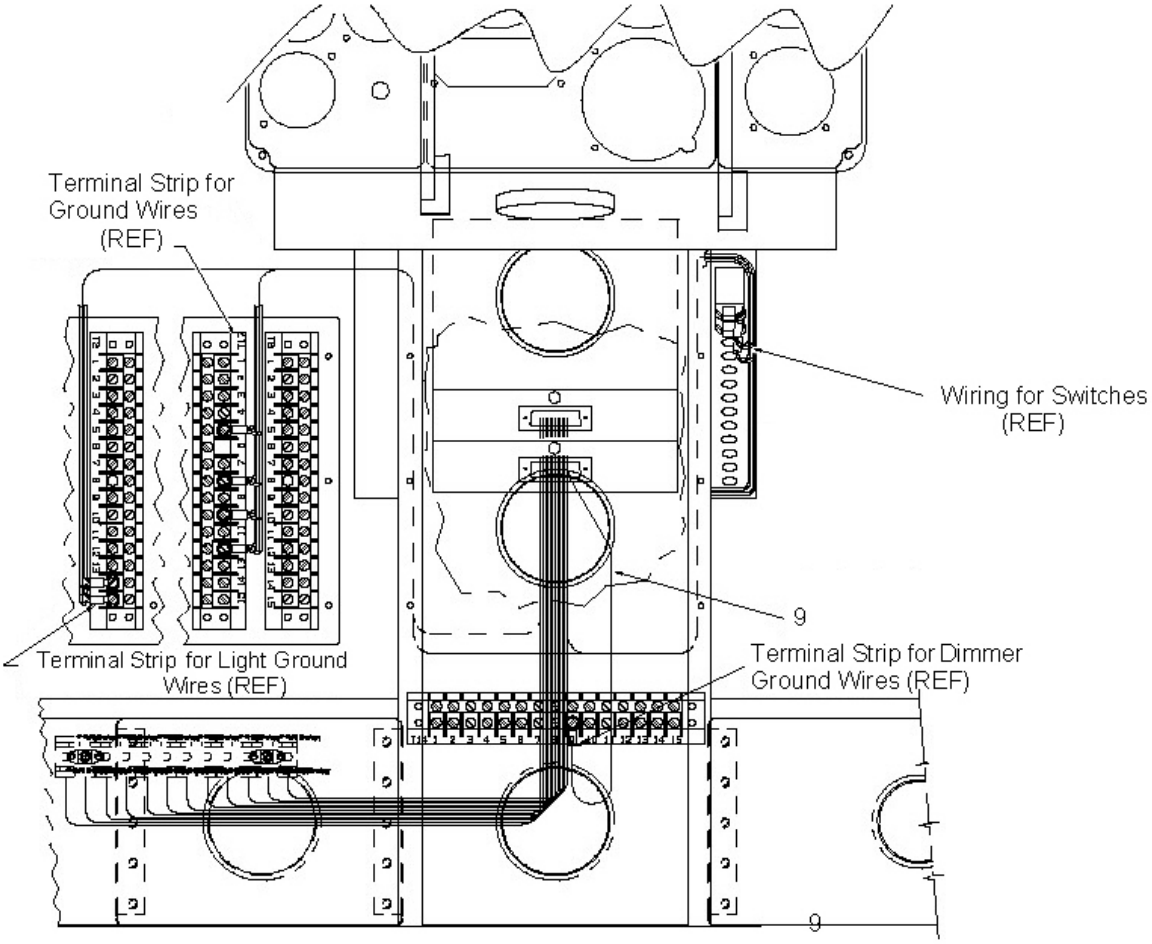

Sheet 2 of 2

FIGURE 10-36. KMA 24H-71 AUDIO PANEL INSTALLATION

UNCONTROLLED COPY WHEN DOWNLOADED OR PRINTED

Visit www.enstromhelicopter.com for instructions to order an original manual and to register for email notification of updates.

FIGURE 10-36. KMA 24H-71 AUDIO PANEL INSTALLATION

ITEM NUMBER	PART NUMBER	DESCRIPTION	QTY PER ASSY	EFFECTIVITY		
				TH-28	480	480B
1	0660-1055-0071	KMA24H-71 Audio Panel	2		X	X
2	MS24693-S24	. Screw	8		X	X
3	7203K2ZQE	. DP Switch	2		X	X
4	7277-5-5	. Circuit Breaker 5 Amp	2		X	X
5*	MS51957-26	. Screw	2		X	X
6	050-01780-0003	. KMA 24H-70/71 Installation Kit	2		X	X
–	008-00041-0001	. . Slider Lug Duel	1		X	X
–	030-01094-0077	. . Connector With Polarizer	1		X	X
–	030-01107-0048	. . Connector Terminal 48T	1		X	X
–	047-05860-0001	. . Ground Plate	1		X	X
–	089-02013-0037	. . Nut Hex	2		X	X
–	089-02051-0024	. . Nut Speed (Not used in this installation)	4		X	X
–	089-02191-0022	. . Nut Hex	2		X	X
–	089-02353-0001	. . Clip Nut (Not used in this installation)	6		X	X
–	089-05903-0007	. . Screw PHP	2		X	X
–	089-05907-0012	. . Screw PHP	2		X	X
–	089-06012-0008	. . Screw PHP (Not used in this installation)	6		X	X
–	091-00072-0003	. . Cable Clamp	1		X	X
7	4199006-5	. Audio Buss Installation	1		X	X
8	CTJ122E25E	. Module, Bussing	12		X	X
9	4192570-1	. KMA-24H Audio Interface	1		X	X
10	ILT1M-M	. Cable Tie	A/R		X	X
11	ILT1.5IM	. Cable Tie	A/R		X	X
12	ILT2S-M	. Cable Tie	A/R		X	X
13	CR2-M	. Connector Ring	A/R		X	X
14	ABMM-AT-C	. Mount	A/R		X	X
15	AJC19-A-C	. Mount	A/R		X	X
16	LHMS-S5-D	. Mount	A/R		X	X
17	SS-44F	. Rivet	A/R		X	X
18	748-RTV	. Sealant	A/R		X	X
–	SST2S-MP	. Cable Tie	A/R		X	X
–	SST1.5IMP	. Cable Tie	A/R		X	X
–	SST1M-MP	. Cable Tie	A/R		X	X
–	CBR1M-M	. Cable Tie	A/R		X	X

UNCONTROLLED COPY WHEN DOWNLOADED OR PRINTED

Visit www.enstromhelicopter.com for instructions to order an original manual and to register for email notification of updates.

FIGURE 10-36. KMA 24H-71 AUDIO PANEL INSTALLATION

ITEM NUMBER	PART NUMBER	DESCRIPTION	QTY PER ASSY	EFFECTIVITY		
				TH-28	480	480B
–	CBR2M-M	. Cable Tie	A/R		X	X
–	CBR3I-M	. Cable Tie	A/R		X	X
–	CBR3S-M	. Cable Tie	A/R		X	X
–	FIT-221V-3/32	. Shrink Tube	A/R		X	X
–	LCB	. Lacing Cord	A/R		X	X

* These longer screws replace those provided with the circuit breaker.

UNCONTROLLED COPY WHEN DOWNLOADED OR PRINTED

Visit www.enstromhelicopter.com for instructions to order an original manual and to register for email notification of updates.

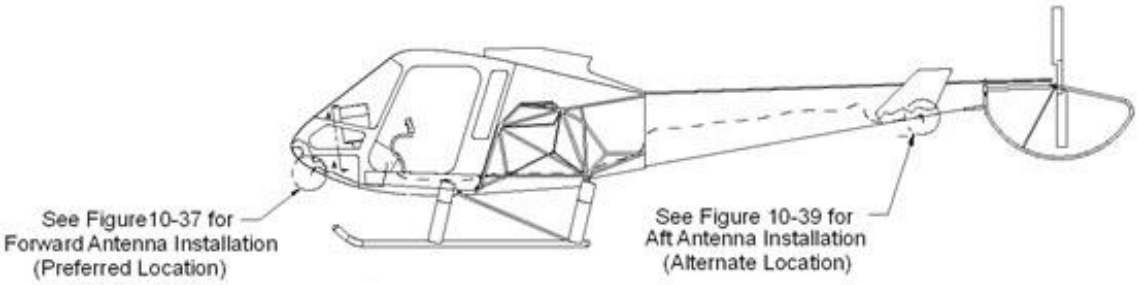

ORIENTATION VIEW

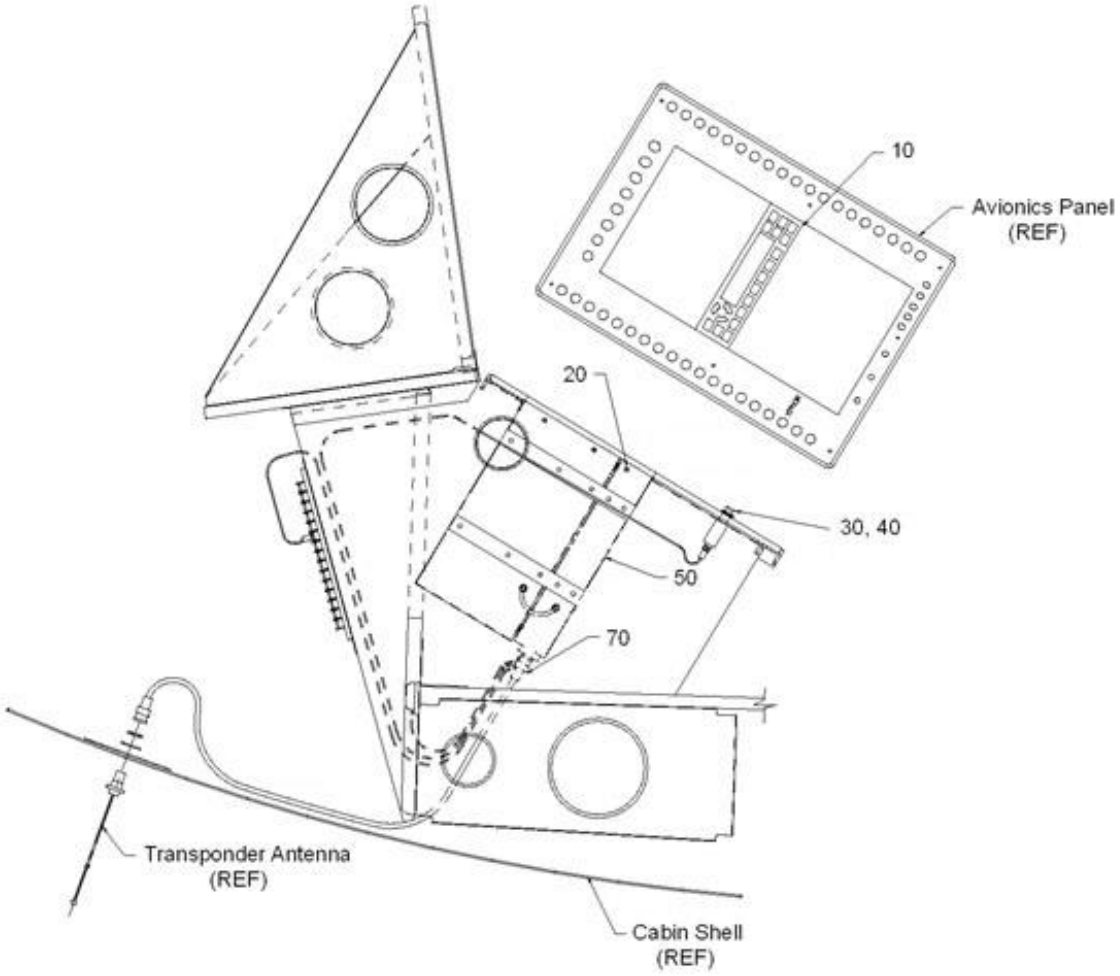

PREFERRED ANTENNA INSTALLATION SHOWN

Sheet 1 of 2

FIGURE 10-37. GTX 327 TRANSPONDER INSTALLATION

UNCONTROLLED COPY WHEN DOWNLOADED OR PRINTED

Visit www.enstromhelicopter.com for instructions to order an original manual and to register for email notification of updates.

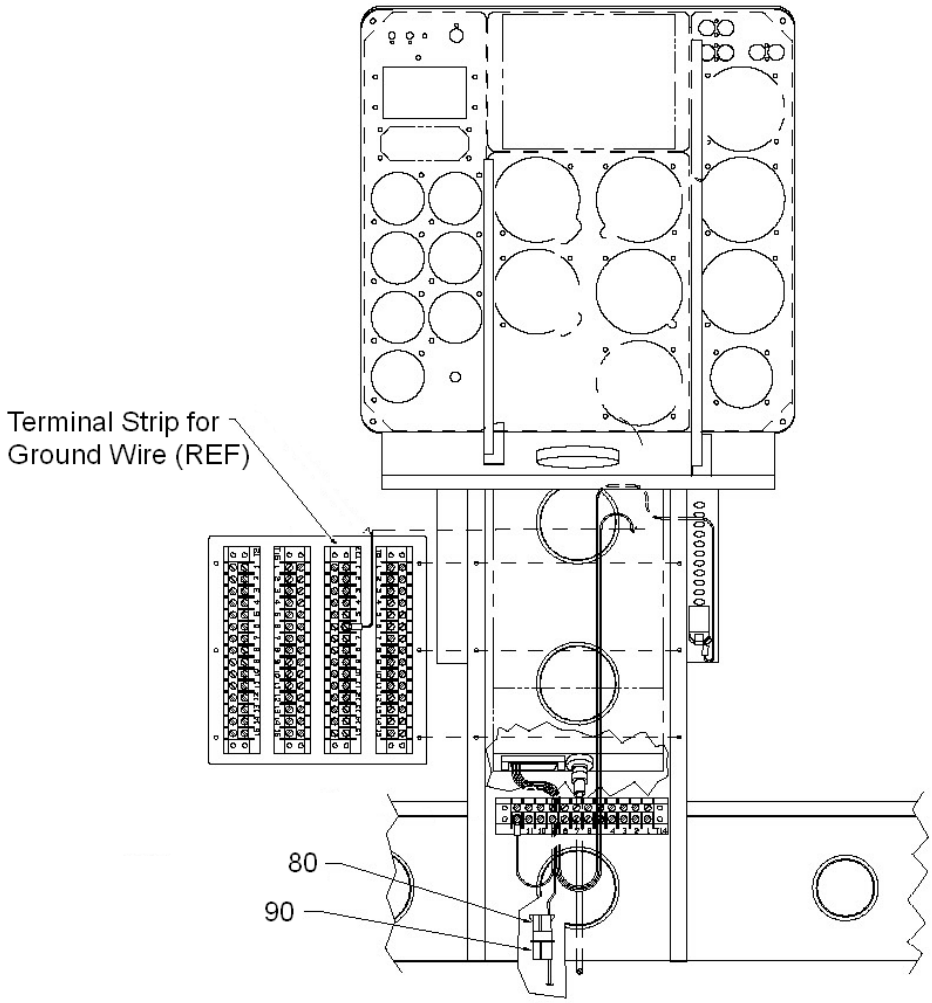

Sheet 2 of 2

See Figure 10-38 for Transponder Antenna Forward Installation.
See Figure 10-39 for Transponder Antenna Aft Installation.

FIGURE 10-37. GTX 327 TRANSPONDER INSTALLATION

UNCONTROLLED COPY WHEN DOWNLOADED OR PRINTED

Visit www.enstromhelicopter.com for instructions to order an original manual and to register for email notification of updates.

FIGURE 10-37. GTX 327 TRANSPONDER INSTALLATION

ITEM NUMBER	PART NUMBER	DESCRIPTION	QTY PER ASSY	EFFECTIVITY		
				TH-28	480	480B
10	010-00188-03	. Transponder Garmin GTX327	1		X	X
20≡	MS24693-S24	. Screw	4		X	X
30	7277-5-3	. Circuit Breaker, 3 Amp	1		X	X
40*	MS51957-26	. Screw	1		X	X
50	4220143-1	. Radio Tray Assembly	1		X	X
70	4192507-103	. GTX327 Interface	1		X	X
80	1-480303-0	. Housing, Socket	1		X	X
–	60617-1	. . Socket	1		X	X
90	1-480305-0	. Housing, Pin	1		X	X
–	60618-1	. . Pin	1		X	X

* These longer screws replace those provided with the circuit breaker.

≡ See Appendix A for equivalent part information.

UNCONTROLLED COPY WHEN DOWNLOADED OR PRINTED

Visit www.enstromhelicopter.com for instructions to order an original manual and to register for email notification of updates.

INTENTIONALLY LEFT BLANK

UNCONTROLLED COPY WHEN DOWNLOADED OR PRINTED

Visit www.enstromhelicopter.com for instructions to order an original manual and to register for email notification of updates.

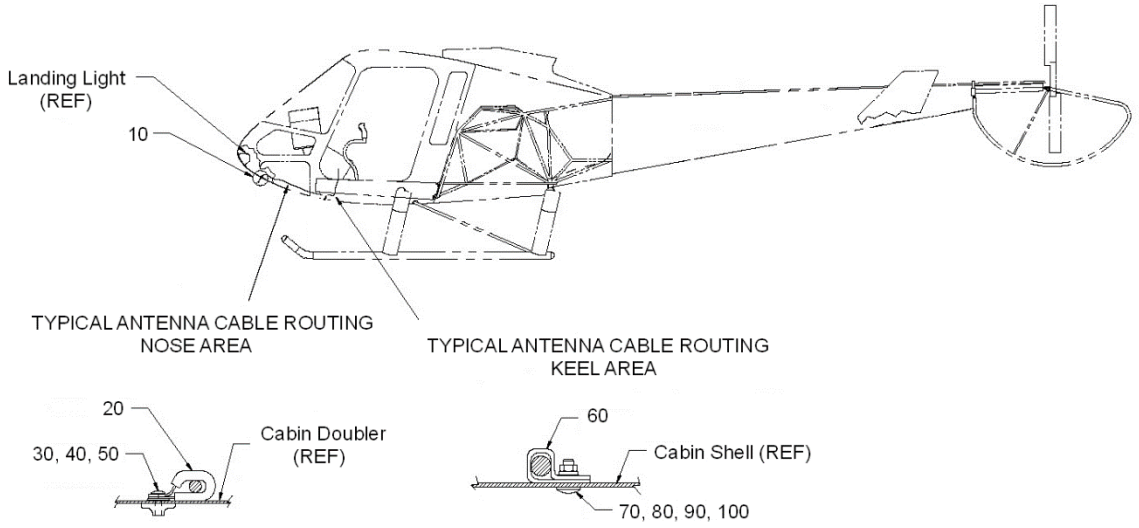

Sheet 1 of 2

See Figure 10-37 for Transponder Installation.

FIGURE 10-38. GTX 327 ANTENNA INSTALLATION FORWARD (PREFERRED) LOCATION

UNCONTROLLED COPY WHEN DOWNLOADED OR PRINTED

Visit www.enstromhelicopter.com for instructions to order an original manual and to register for email notification of updates.

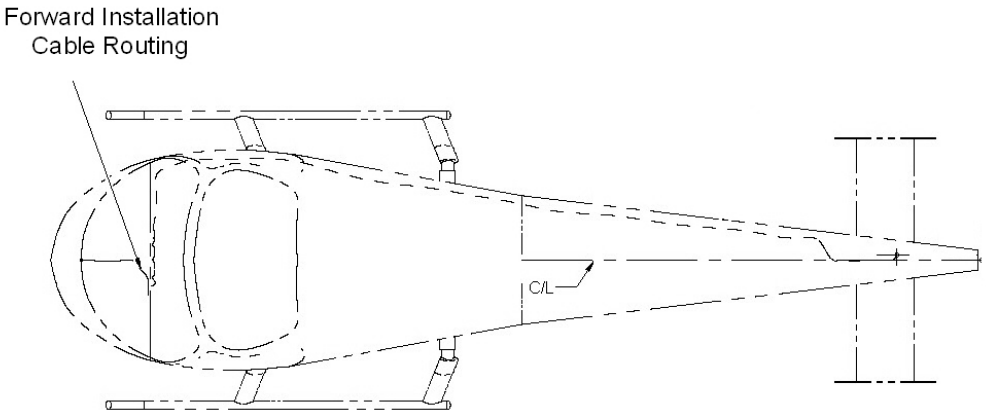

CABLE ROUTING FOR FORWARD (PREFERRED) INSTALLATION

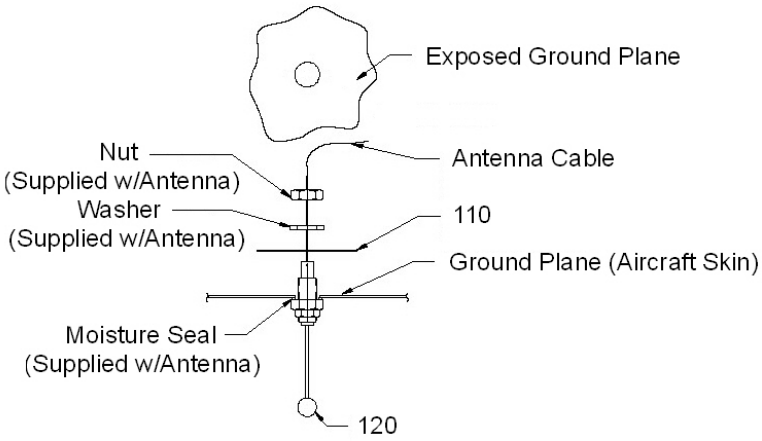

TRANSPONDER ANTENNA INSTALLATION FOR FORWARD (PREFERRED) LOCATION

Sheet 2 of 2

See Figure 10-37 for Transponder Installation.

FIGURE 10-38. GTX 327 ANTENNA INSTALLATION FORWARD (PREFERRED) LOCATION

UNCONTROLLED COPY WHEN DOWNLOADED OR PRINTED

Visit www.enstromhelicopter.com for instructions to order an original manual and to register for email notification of updates.

FIGURE 10-38. GTX 327 ANTENNA INSTALLATION FORWARD (PREFERRED) LOCATION

ITEM NUMBER	PART NUMBER	DESCRIPTION	QTY PER ASSY	EFFECTIVITY		
				TH-28	480	480B
10	4220521-1	. Antenna Installation Fwd	1		X	X
20	439-SS4-8-2-6	. . Clip, Adel, 1/4" (3-Tube)	3		X	X
30	AN525-832R8	. . Screw	3		X	X
40	S8P150	. . PlusNut	3		X	X
50	MS35333-40	. . Washer, Lock	3		X	X
60	CCH25-S10-C	. . Clamp: Nylon	1		X	X
70	AN525-832R7	. . Screw	1		X	X
80	NAS1149FN816P	. . Washer: Flat	1		X	X
90	MS35338-42	. . Washer: Lock	1		X	X
100	MS35649-282	. . Nut: Hex	1		X	X
110	28-22184-11	. . Backing Plate for Antenna	1		X	X
120	AV-22	. . Antenna: Transponder, Stub	1		X	X

UNCONTROLLED COPY WHEN DOWNLOADED OR PRINTED

Visit www.enstromhelicopter.com for instructions to order an original manual and to register for email notification of updates.

INTENTIONALLY LEFT BLANK

UNCONTROLLED COPY WHEN DOWNLOADED OR PRINTED

Visit www.enstromhelicopter.com for instructions to order an original manual and to register for email notification of updates.

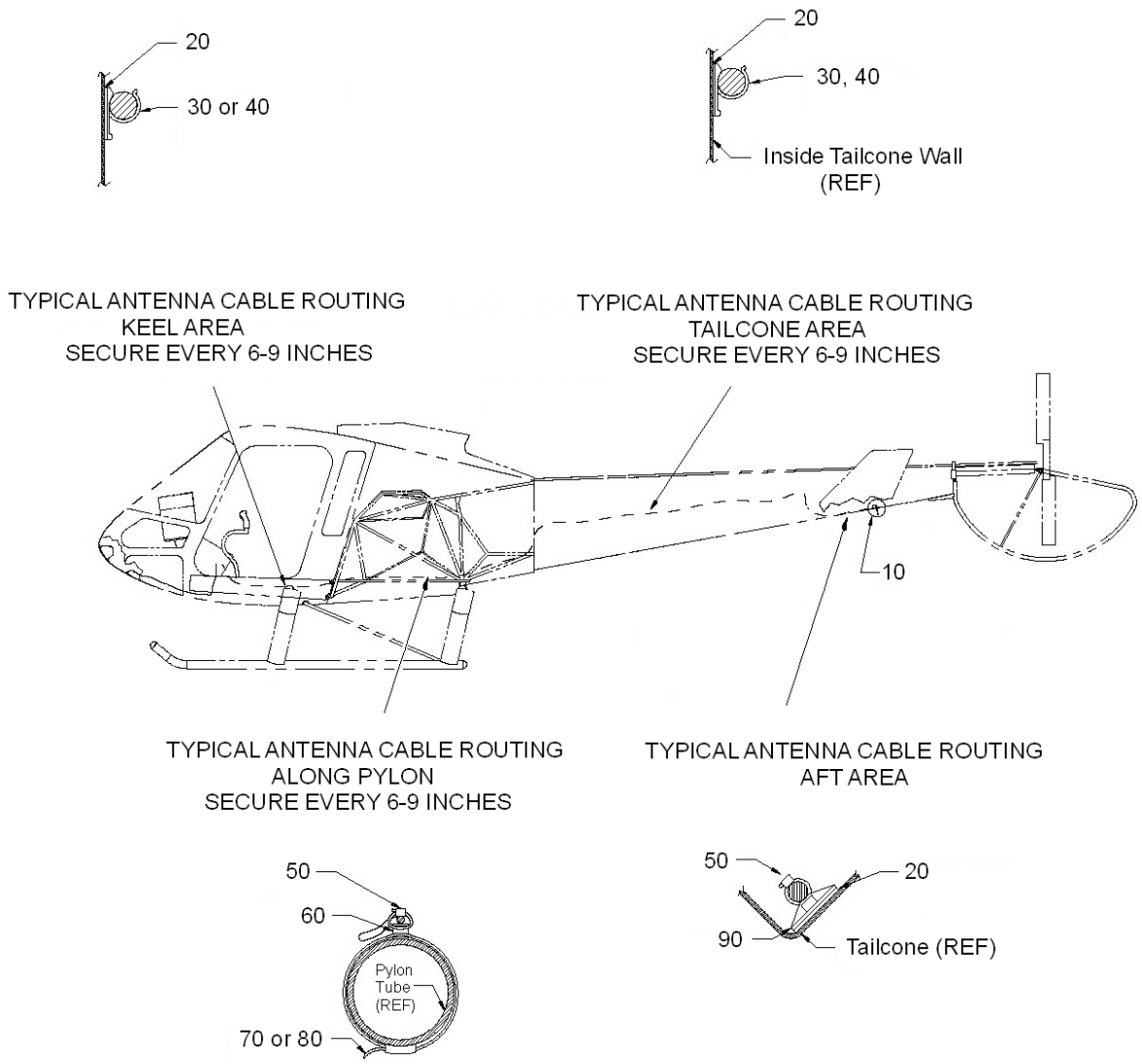

Sheet 1 of 2

See Figure 10-37 for Transponder Installation.

FIGURE 10-39. GTX 327 ANTENNA INSTALLATION AFT (ALTERNATE) LOCATION

UNCONTROLLED COPY WHEN DOWNLOADED OR PRINTED

Visit www.enstromhelicopter.com for instructions to order an original manual and to register for email notification of updates.

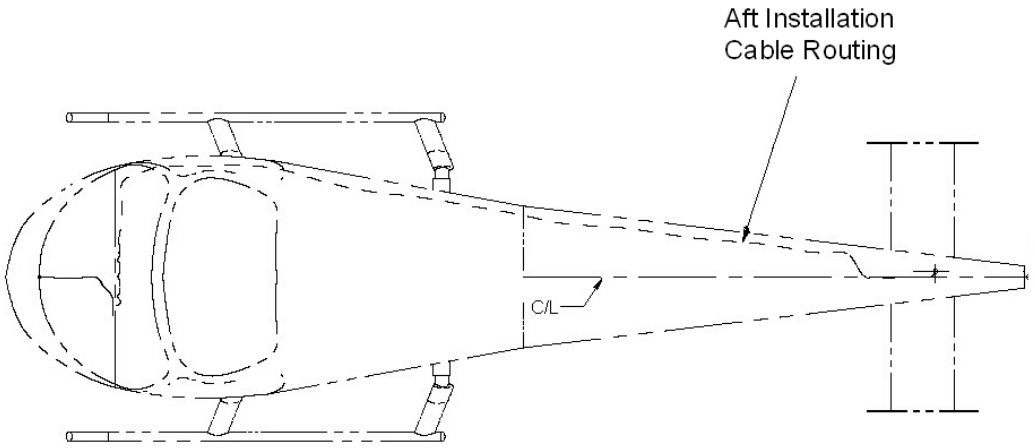

CABLE ROUTING FOR AFT (ALTERNATE) INSTALLATION

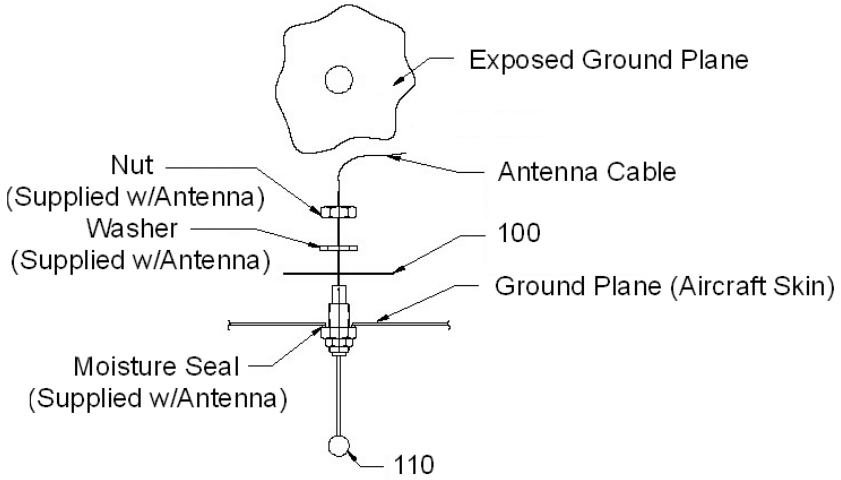

TRANSPONDER ANTENNA AFT (ALTERNATE) INSTALLATION

Sheet 2 of 2

See Figure 10-37 for Transponder Installation.

FIGURE 10-39. GTX 327 ANTENNA INSTALLATION AFT (ALTERNATE) LOCATION

UNCONTROLLED COPY WHEN DOWNLOADED OR PRINTED

Visit www.enstromhelicopter.com for instructions to order an original manual and to register for email notification of updates.

FIGURE 10-39. GTX 327 ANTENNA INSTALLATION AFT (ALTERNATE) LOCATION

ITEM NUMBER	PART NUMBER	DESCRIPTION	QTY PER ASSY	EFFECTIVITY		
				TH-28	480	480B
10	4220521-3	. Antenna Installation Aft	1		X	X
20	748-RTV	. . Sealant: Non-Corrosive.	0.25		X	X
30	ACC38-A-C20	. . Clip, Cord	6		X	X
40	ACC62-A-C20	. . Clip, Cord	6		X	X
50	CBR1M-M	. . Cable Tie	A/R		X	X
60	CR2-M	. . Ring: Connector, Cable Tie	10		X	X
70	SST1.5I-MP	. . Cable Tie	10		X	X
80	SST2S-MP	. . Cable: Tie	A/R		X	X
90	ABM1M-A-C	. . Mount: Tie	6		X	X
100	28-22184-11	. . Backing Plate for Antenna	1		X	X
110	AV-22	. . Antenna, Transponder Stub	1		X	X

UNCONTROLLED COPY WHEN DOWNLOADED OR PRINTED

Visit www.enstromhelicopter.com for instructions to order an original manual and to register for email notification of updates.

SECTION 11

UTILITY SYSTEMS

UNCONTROLLED COPY WHEN DOWNLOADED OR PRINTED

Visit www.enstromhelicopter.com for instructions to order an original manual and to register for email notification of updates.

INTENTIONALLY LEFT BLANK

UNCONTROLLED COPY WHEN DOWNLOADED OR PRINTED

Visit www.enstromhelicopter.com for instructions to order an original manual and to register for email notification of updates.

SECTION 11 – TABLE OF CONTENTS

	Cover	11-1
	Table of Contents	11-1.2
11-1	Bleed Air Heater and Defroster Installation	11-2
11-2	Heater and Defroster Valve Assemblies	11-8
11-3	Heater Manifold Assembly	11-10
11-4	Fresh Air Ventilation Installation	11-12
11-5	Fresh Air Ventilation Installation	11-16
11-6	Overhead Console Vent/Light Assembly	11-20

UNCONTROLLED COPY WHEN DOWNLOADED OR PRINTED

Visit www.enstromhelicopter.com for instructions to order an original manual and to register for email notification of updates.

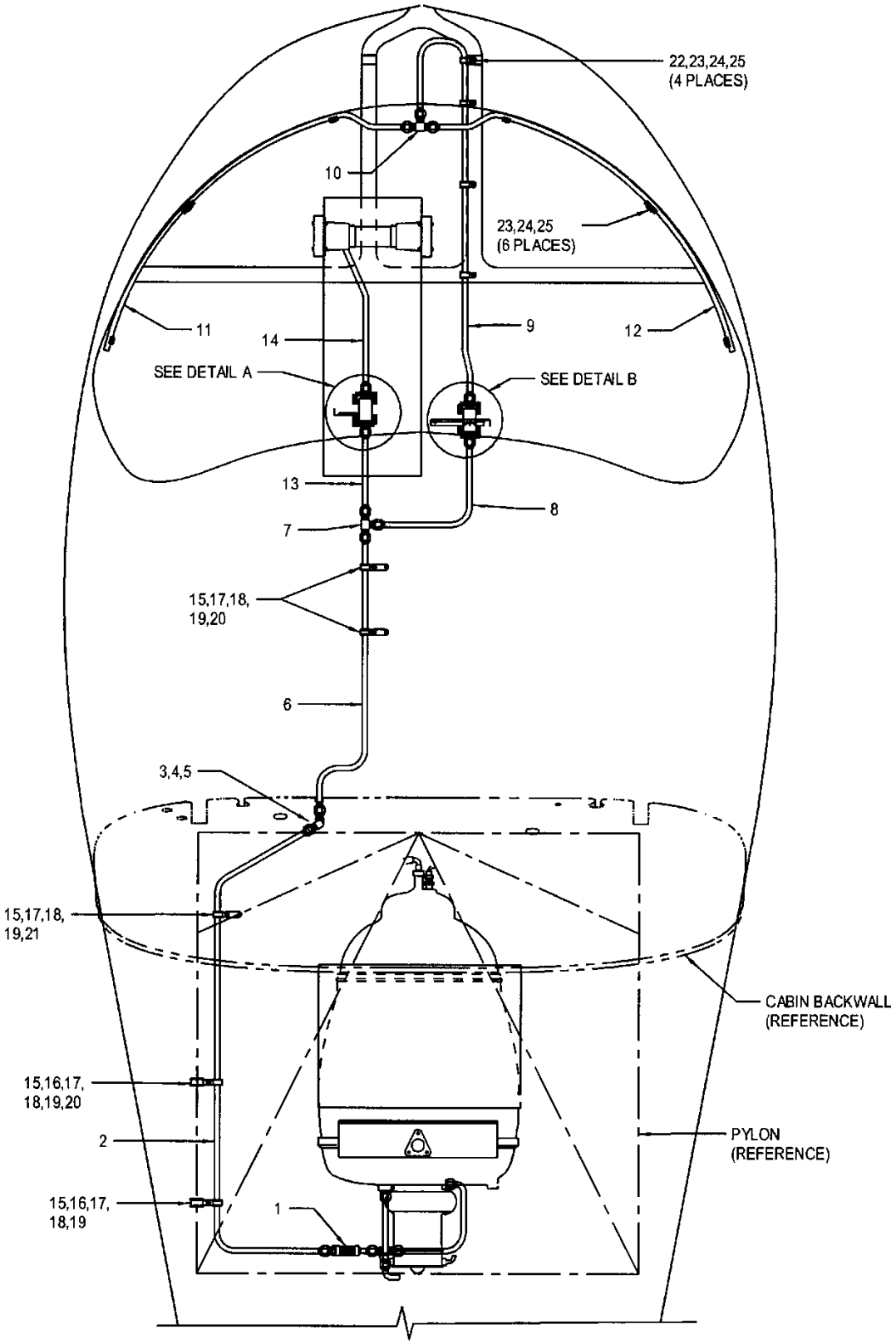

Sheet 1 of 3

Figure 11-1. BLEED AIR HEATER AND DEFROSTER INSTALLATION

UNCONTROLLED COPY WHEN DOWNLOADED OR PRINTED

Visit www.enstromhelicopter.com for instructions to order an original manual and to register for email notification of updates.

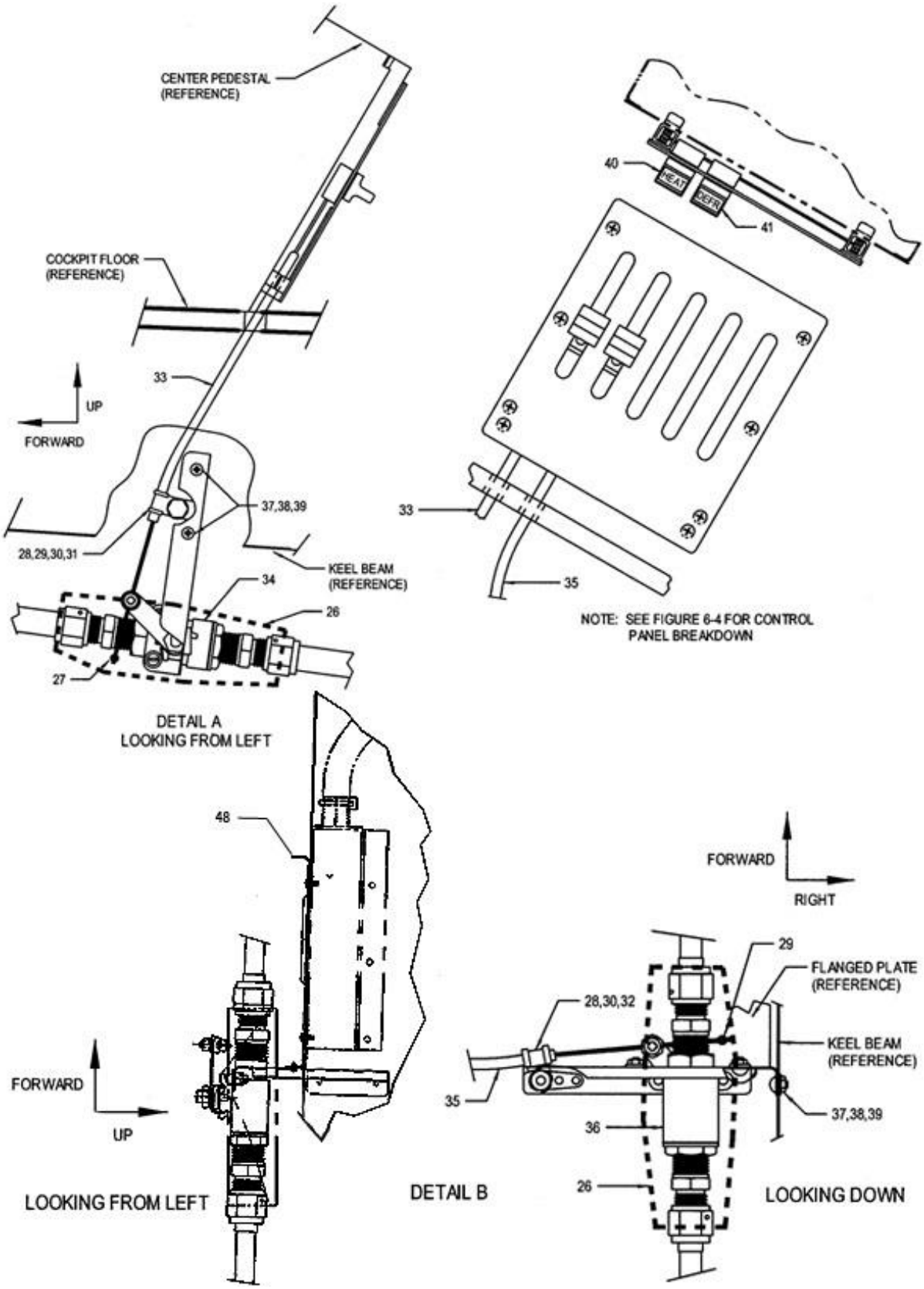

Sheet 2 of 3

FIGURE 11-1. BLEED AIR HEATER AND DEFROSTER INSTALLATION

UNCONTROLLED COPY WHEN DOWNLOADED OR PRINTED

Visit www.enstromhelicopter.com for instructions to order an original manual and to register for email notification of updates.

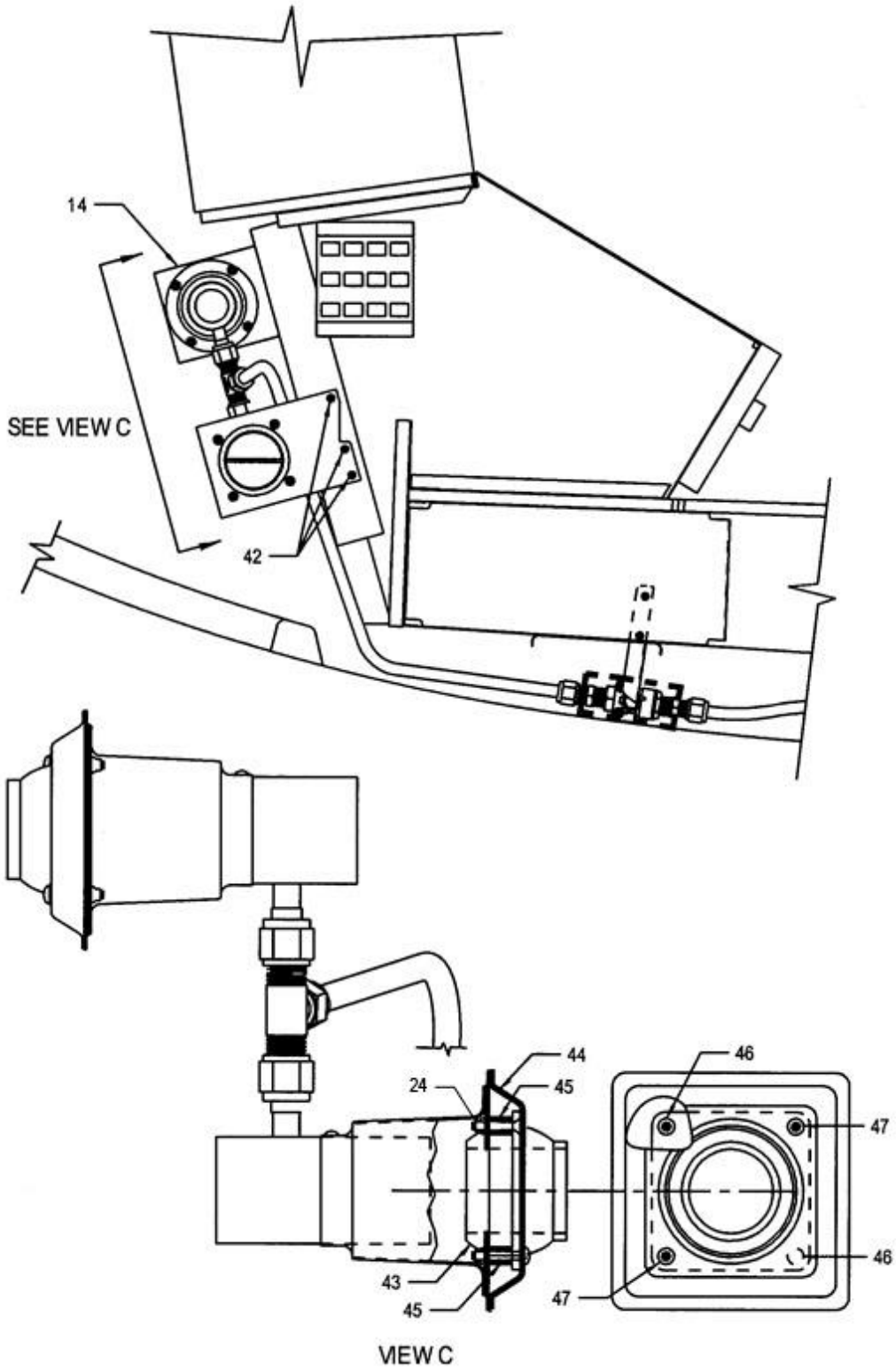

Sheet 3 of 3

FIGURE 11-1. BLEED AIR HEATER AND DEFROSTER INSTALLATION

UNCONTROLLED COPY WHEN DOWNLOADED OR PRINTED

Visit www.enstromhelicopter.com for instructions to order an original manual and to register for email notification of updates.

FIGURE 11-1. BLEED AIR HEATER AND DEFROSTER INSTALLATION

ITEM NUMBER	PART NUMBER	DESCRIPTION	QTY PER ASSY	EFFECTIVITY		
				TH-28	480	480B
1	S-9213EC-2	. Hose Assembly	1		X	X
2	4129554-1	. Line Assembly	1		X	X
3	S-9230EC-1	. Drain Valve	1		X	X
4‡	ES49026-8	. Fitting	1		X	X
4	8-8MTX-SS	. Tee (Superseded by ES49026-8) (Non – Preferred Alternate)	1		X	X
5	MS51521B8S	. Swivel Nut Elbow	1		X	X
6†	4129553-1	. Line Assembly	1		X	X
7	AN824-8J	. Tee	1		X	X
8†	4129556-1	. Line Assembly	1		X	X
9	4129555-1	. Line Assembly	1		X	X
10	AN824-8D	. Tee	1		X	X
11	E9002-1	. Defroster Assembly (L/H)	1		X	X
12	E9002-2	. Defroster Assembly (R/H)	1		X	X
13†	4129552-1	. Line Assembly	1		X	X
14	4129559-1	. Heater Manifold Assembly (See Figure 11-3 for breakdown)	1		X	X
15	MS21919WF12	. Clamp	5		X	X
16	MS21919WF16	. Clamp	2		X	X
17	AN515-8R8	. Screw	9		X	X
18	AN960-8L	. Washer	18		X	X
19	AN364-832A	. Nut	9		X	X
20	4129551-11	. Support Bracket	3		X	X
21	4129550-11	. Support Bracket	1		X	X
22	MS21919WF8	. Clamp	4		X	X
23	AN525-8R7	. Screw	10		X	X
24	S8P-150	. PlusNut	14		X	X
25*	AN936A416	. Lock Washer	10		X	X
26	4129558-11	. Fire Sleeve	2		X	X
27	1053	. Stop Nut	2		X	X
28	MS21919WF4	. Clamp	2		X	X
29	AN3-8A	. Bolt	1		X	X
30	AN960-10L	. Washer	2		X	X
31‡	MS21042-3	. Nut	1		X	X
31	AN364-1032A	. Nut (Superseded by MS21042-3)	1		X	X
32	AN3-3A	. Bolt	1		X	X
33	4129560-1	. Wire and Conduit	1		X	X
34	4129501-901	. Heater Valve Assembly (See Figure 11-2 for breakdown)	1		X	X

UNCONTROLLED COPY WHEN DOWNLOADED OR PRINTED

Visit www.enstromhelicopter.com for instructions to order an original manual and to register for email notification of updates.

FIGURE 11-1. BLEED AIR HEATER AND DEFROSTER INSTALLATION

ITEM NUMBER	PART NUMBER	DESCRIPTION	QTY PER ASSY	EFFECTIVITY		
				TH-28	480	480B
35	4129560-3	. Wire and Conduit	1		X	X
36	4129501-902	. Defroster Valve Assembly (See Figure 11-2 for breakdown)	1		X	X
37	AN515-8R7	. Screw	6		X	X
38	AN960-8	. Washer	6		X	X
39	AN364-832A	. Nut	6		X	X
40	4119894-15	. Placard, Heat	1		X	X
41	4119894-19	. Placard, Defroster	1		X	X
42	AN515-8R6	. Screw	6		X	X
43	4129562-3	. Eyeball, Heater Outlet	2		X	X
44	4129561-11	. Cover, Heater Outlet	2		X	X
45	4129563-11	. Spacer	8		X	X
46	AN509-8R16	. Screw	4		X	X
47	AN525-832R16	. Screw	4		X	X
48**	4196518-19	. Bracket	1		X	X

* Lock washer installed between PlusNut and cabin structure.

** Used on helicopters with G1000H installation or if standard cooling fan is not installed.

† Use -3 line assemblies if ship is installed with G1000H.

‡ Effectivity 480B S/N 5157 and subsequent. Retrofittable to 480 S/N 5001 – 5041 and 480B S/N 5042 and subsequent.

UNCONTROLLED COPY WHEN DOWNLOADED OR PRINTED

Visit www.enstromhelicopter.com for instructions to order an original manual and to register for email notification of updates.

INTENTIONALLY LEFT BLANK

UNCONTROLLED COPY WHEN DOWNLOADED OR PRINTED

Visit www.enstromhelicopter.com for instructions to order an original manual and to register for email notification of updates.

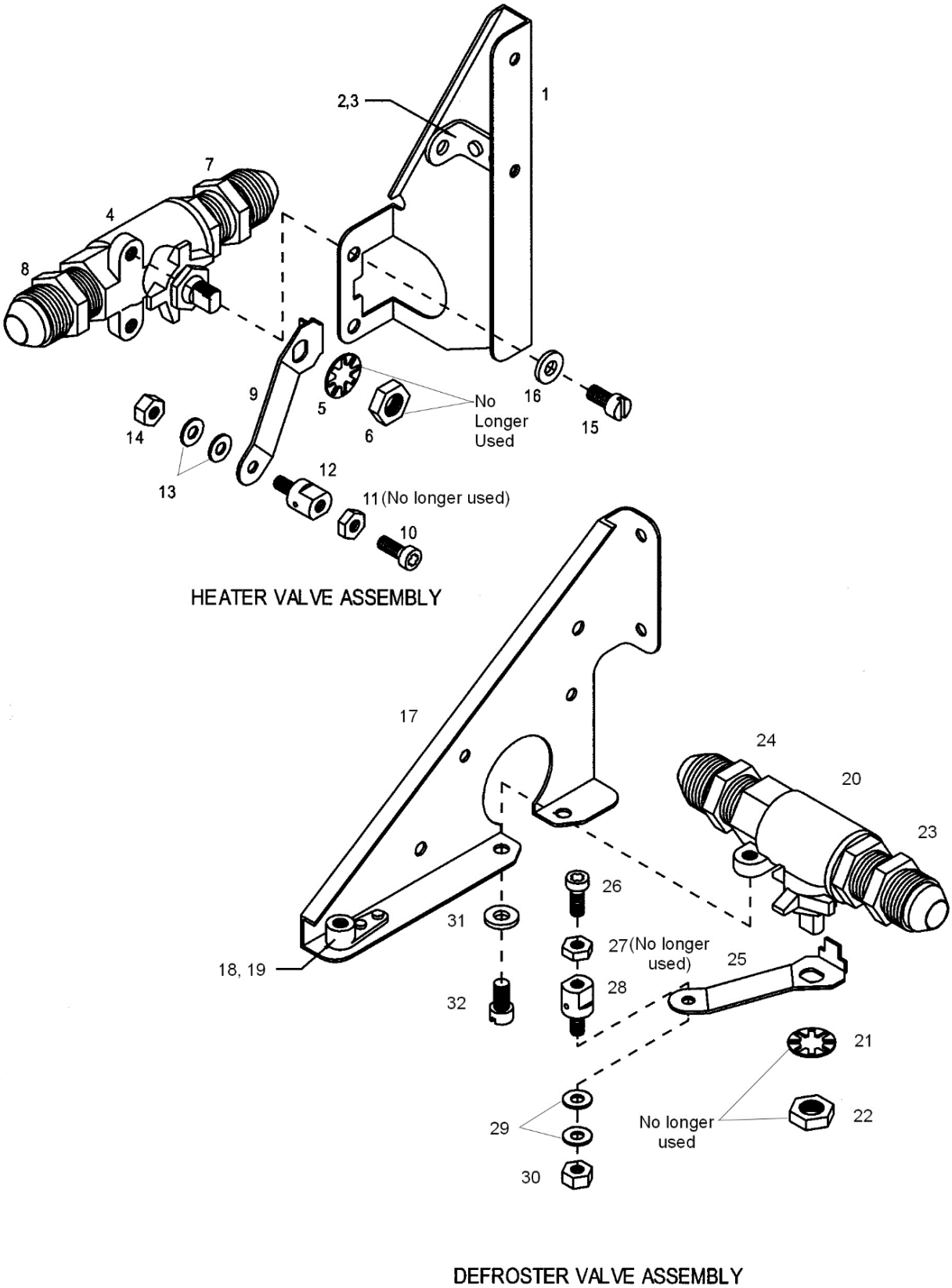

FIGURE 11-2. HEATER AND DEFROSTER VALVE ASSEMBLIES

UNCONTROLLED COPY WHEN DOWNLOADED OR PRINTED

Visit www.enstromhelicopter.com for instructions to order an original manual and to register for email notification of updates.

FIGURE 11-2. HEATER AND DEFROSTER VALVE ASSEMBLIES

ITEM NUMBER	PART NUMBER	DESCRIPTION	QTY PER ASSY	EFFECTIVITY		
				TH-28	480	480B
–	4129501-901	. Heater Valve Assembly	1		X	X
1	4129541-1	. . Bracket Assembly	1		X	X
2	AN743-13	. . . Clip	1		X	X
3**	MS20470AD4-4	. . . Rivet	2		X	X
3	MS20470AD4-3	. . . Rivet (Superseded by MS20470AD4-4)	2		X	X
4	4120027-1	. . Valve, Scavenge Air	1		X	X
5†	AN936-A516	. . . Lock Washer (No longer used)	1		X	X
6†	AN316-5R	. . . Nut (No longer used)	1		X	X
7	AN816-8J	. . Union	1		X	X
8	AN816-8D	. . Union	1		X	X
9‡	4129540-15	. . Arm	1		X	X
9**	4129540-13	. . Arm (Superseded by 4129540-15)	1		X	X
9	4129540-11	. . Arm (Superseded by 4129540-13)	1		X	X
10**	90251A190	. . Screw, Set	1		X	X
10	AN515-8R7	. . Screw (Superseded by 90251A190)	1		X	X
11**	AN340-8	. . Nut (No longer used)	1		X	X
12*	4122015-23	. . Screw, Fuel Shutoff	1		X	X
12	4122015-21	. . Screw, Fuel Shutoff (Alternate to 4122015-23)	1		X	X
13**	NAS1149FN832P	. . Washer	2		X	X
13	AN960-8	. . Washer (Superseded by NAS1149FN832P)	2		X	X
14	AN654-832A	. . Nut	1		X	X
15	AN503-10-6	. . Screw, Machine	2		X	X
16**	NAS1149D0363H	. . Washer, Flat	2		X	X
16	AN960D10	. . Washer, Flat (Superseded by (NAS1149D0363H)	2		X	X
–	MS20995C32	. . Safety Wire	A/R		X	X
–	4129501-902	. Defroster Valve Assembly	1		X	X
17	4129542-1	. . Bracket Assembly	1		X	X
18●	MS21080-08	. . . Nut Plate	1		X	X
18	F22NA17A-02	. . . Nut Plate (Superseded by MS21080-08)	1		X	X
19●	NAS1097AD3-4	. . . Rivet	2		X	X
19	MS20426AD3-3	. . . Rivet (Superseded by NAS1097AD3-4)	2		X	X
20	4120027-1	. . Valve, Scavenge Air	1		X	X
21†	AN936-A516	. . . Lock Washer (No longer used)	1		X	X
22†	AN316-5R	. . . Nut (No longer used)	1		X	X
23	AN816-8J	. . Union	1		X	X

UNCONTROLLED COPY WHEN DOWNLOADED OR PRINTED

Visit www.enstromhelicopter.com for instructions to order an original manual and to register for email notification of updates.

ITEM NUMBER	PART NUMBER	DESCRIPTION	QTY PER ASSY	EFFECTIVITY		
				TH-28	480	480B
24	AN816-8D	. . Union	1		X	X
25‡	4129540-15	. . Arm	1		X	X
25**	4129540-13	. . Arm (Superseded by 4129540-15)	1		X	X
25	4129540-11	. . Arm (Superseded by 4129540-13)	1		X	X
26**	90251A190	. . Screw, Set	1		X	X
26	AN515-8R7	. . Screw (Superseded by 90251A190)	1		X	X
27**	AN340-8	. . Nut (No longer used)	1		X	X
28*	4122015-23	. . Screw, Fuel Shutoff	1		X	X
28	4122015-21	. . Screw, Fuel Shutoff (Alternate to 4122015 -23)	1		X	X
29**	NAS1149FN832P	. . Washer, Flat	2		X	X
29	AN960-8	. . Washer (Superseded by NAS1149FN832P)	2		X	X
30	AN654-832A	. . Nut	1		X	X
31**	NAS1149D0363H	. . Washer, Flat	2		X	X
31	AN960D10	. . Washer, Flat (Superseded by NAS1149D0363H)	2		X	X
32	AN503-10-6	. . Screw, Machine	2		X	X
–	MS20995C32	. . Safety Wire	A/R		X	X

* Effectivity 480B S/N 5136 and subsequent.

** Effectivity 480B S/N 5148 and subsequent.

† Replaced by a valve stem nut that is included with the valve from the manufacturer.

‡ Effectivity 480B S/N 5155 and subsequent. Retrofittable to 480 S/N 5001, 480B S/N 5042 and subsequent.

• Effectivity 480B S/N 5195 and subsequent. Retrofittable to 480 S/N 5001 – 5041, 480B S/N 5042 and subsequent.

UNCONTROLLED COPY WHEN DOWNLOADED OR PRINTED

Visit www.enstromhelicopter.com for instructions to order an original manual and to register for email notification of updates.

INTENTIONALLY LEFT BLANK

UNCONTROLLED COPY WHEN DOWNLOADED OR PRINTED

Visit www.enstromhelicopter.com for instructions to order an original manual and to register for email notification of updates.

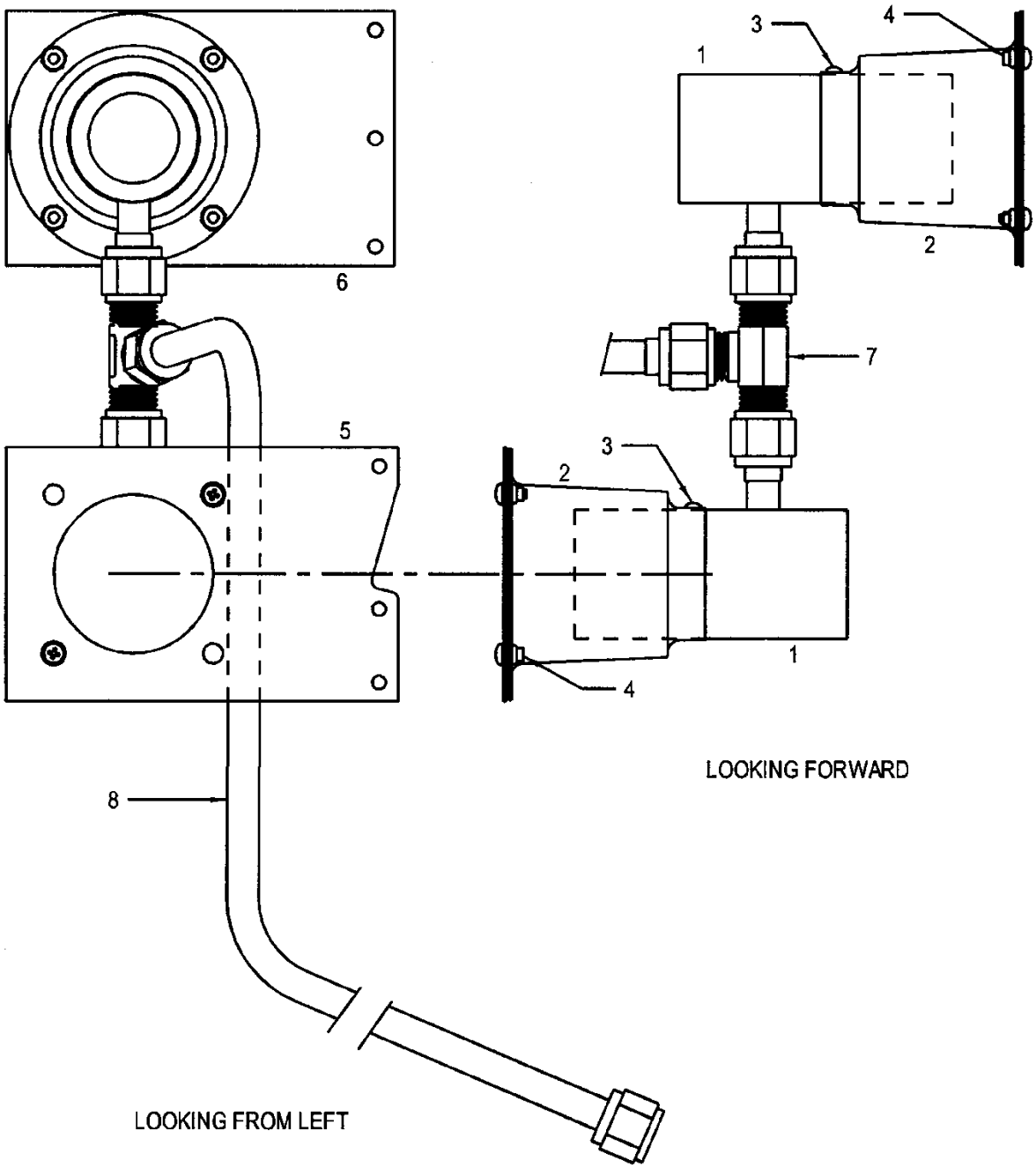

FIGURE 11-3. HEATER MANIFOLD ASSEMBLY

UNCONTROLLED COPY WHEN DOWNLOADED OR PRINTED

Visit www.enstromhelicopter.com for instructions to order an original manual and to register for email notification of updates.

FIGURE 11-3. HEATER MANIFOLD ASSEMBLY

ITEM NUMBER	PART NUMBER	DESCRIPTION	QTY PER ASSY	EFFECTIVITY		
				TH-28	480	480B
–	4129559-1	. Heater Manifold Assembly	1		X	X
1	S-6424EC-1	. . Heater Ejector Assembly	2		X	X
2	S9704EC-1	. . Adapter Assembly	2		X	X
3 ≡	6X3/8	. . Screw	2		X	X
4	S8P150	. . PlusNut	8		X	X
5	4129557-13	. . Support Plate	1		X	X
6	4129557-11	. . Support Plate	1		X	X
7	AN824-8D	. . Tee	1		X	X
8*	4129543-3	. . Line Assembly	1		X	X
8	4129543-1	. . Line Assembly (Superseded by 4129543-3)	1		X	X

≡ See Appendix A for equivalent part information.

* Effectivity 480B S/N 5195 and subsequent. Retrofittable to 480 S/N 5001 – 5041, 480B S/N 5042 and subsequent.

UNCONTROLLED COPY WHEN DOWNLOADED OR PRINTED

Visit www.enstromhelicopter.com for instructions to order an original manual and to register for email notification of updates.

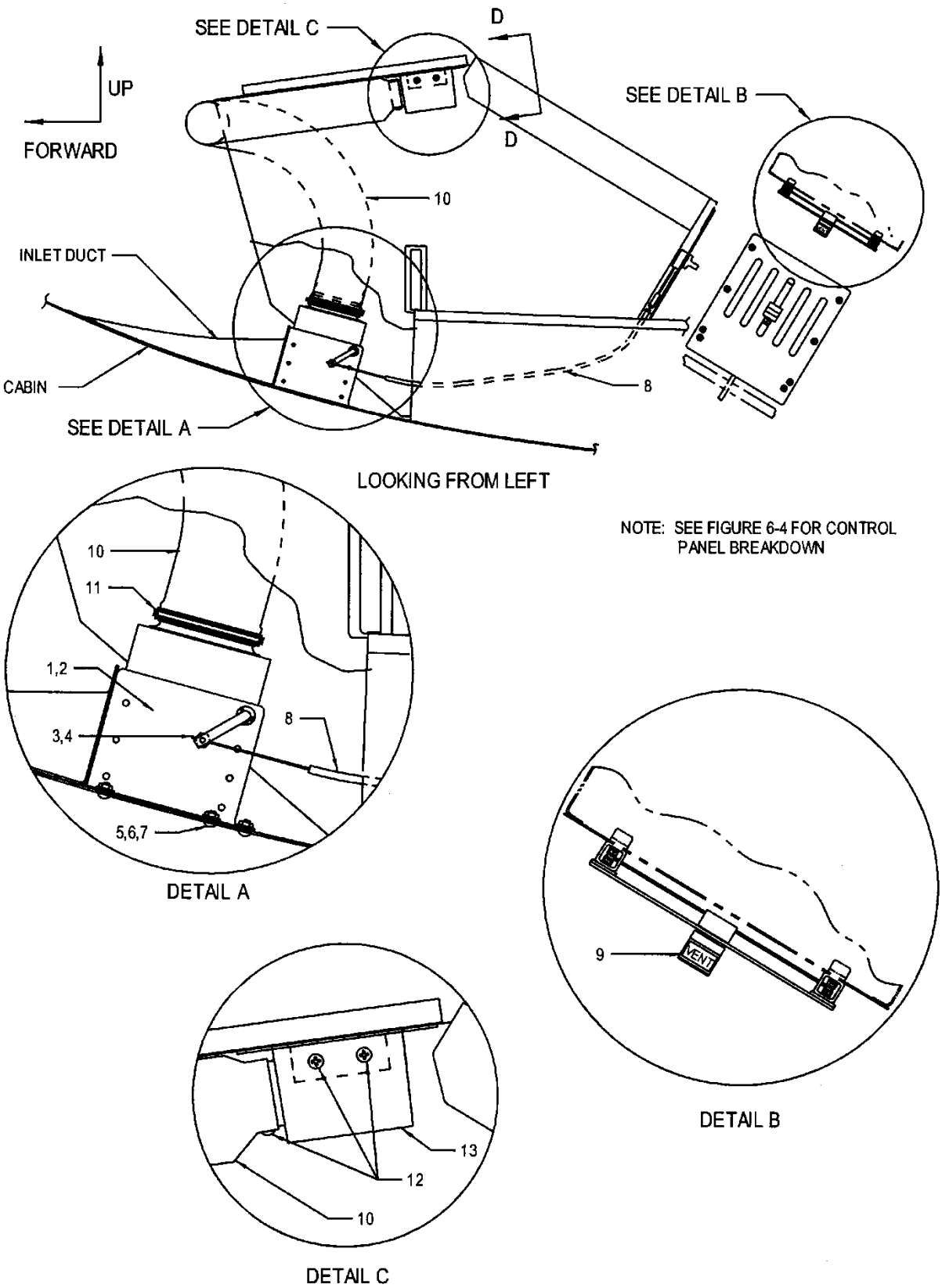

Sheet 1 of 2

FIGURE 11-4. FRESH AIR VENTILATION INSTALLATION

UNCONTROLLED COPY WHEN DOWNLOADED OR PRINTED

Visit www.enstromhelicopter.com for instructions to order an original manual and to register for email notification of updates.

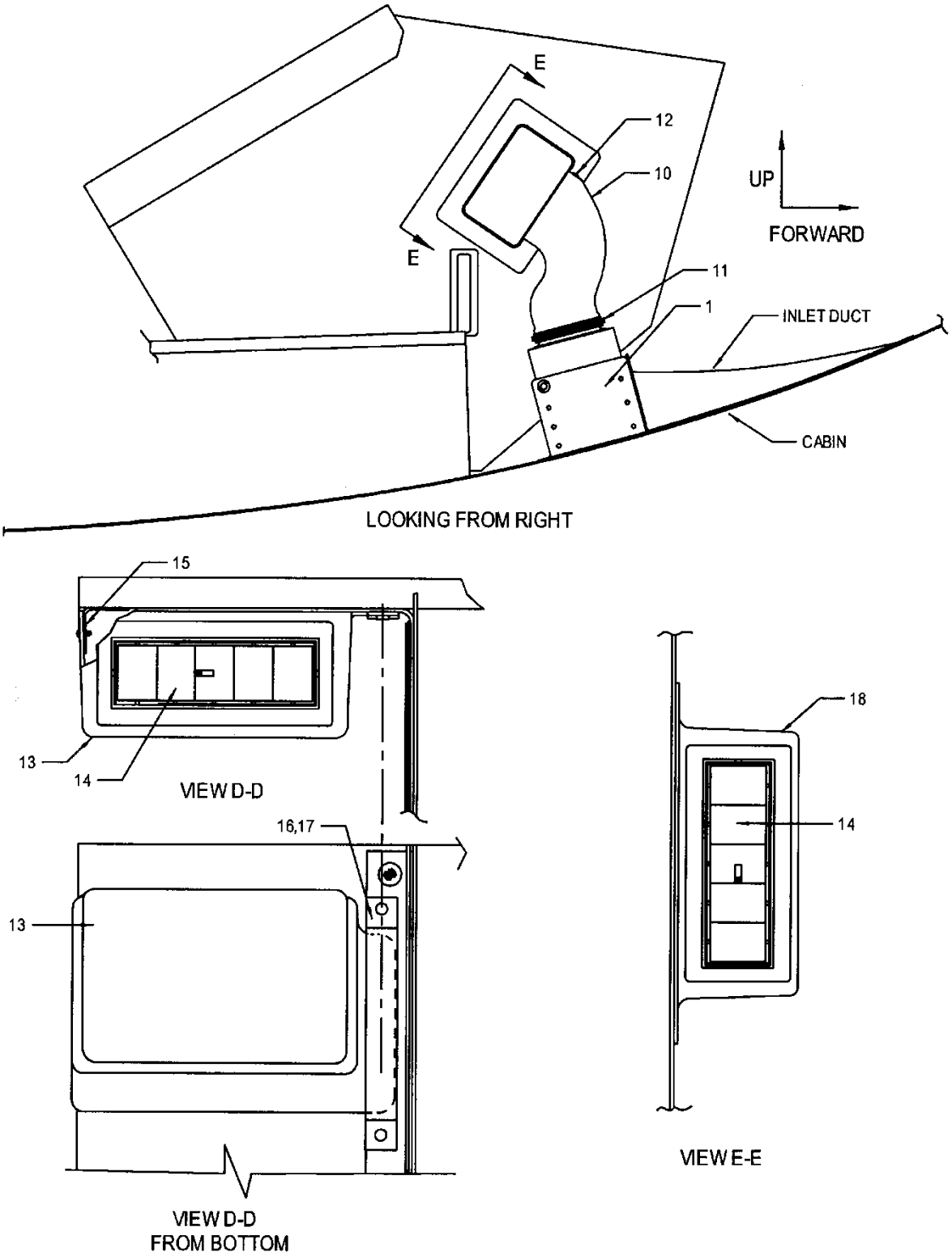

Sheet 2 of 2

FIGURE 11-4. FRESH AIR VENTILATION INSTALLATION

UNCONTROLLED COPY WHEN DOWNLOADED OR PRINTED

Visit www.enstromhelicopter.com for instructions to order an original manual and to register for email notification of updates.

FIGURE 11-4. FRESH AIR VENTILATION INSTALLATION

ITEM NUMBER	PART NUMBER	DESCRIPTION	QTY PER ASSY	EFFECTIVITY		
				TH-28	480	480B
1	4129530-1	. Ventilation Plenum Assembly	1		X	X
2	4516-75	. . Foam Tape	A/R		X	X
3†	MS35206-203	. . Screw	1		X	X
3	AN515-6R8	. . Screw (Superseded by MS35206-203)	1		X	X
4	4129524-11	. . Nut	1		X	X
5	AN526-632R7	. Screw	6		X	X
6	AN960-6	. Washer	6		X	X
7	AN364-632A	. Nut	6		X	X
8	4129560-5	. Vent Cable Assembly	1		X	X
9	4119894-17	. Vent Placard	1		X	X
10	4129500-29	. Duct	2		X	X
11	PLT4S-CO	. Cable Tie	2		X	X
12	AN530-6R6	. Screw	4		X	X
13*	4119890-7	. Console Shroud (Left Side)	1			X
13**	4119895-3	. Vent (Superseded by 4119890-7)	1		X	X
14	10-796-00	. Louver	2		X	X
15	4129548-11	. Angle	1		X	X
16	4129548-13	. Bracket	1		X	X
17	MS20426AD4-4	. Rivet	2		X	X
18*	4119890-6	. Console Shroud (Right Side)	1			X
18**	4119895-1	. Vent	1		X	X

* Refer to Figure 10-30.

** S/N 5071 and earlier.

† Effectivity 480B S/N 5215 and subsequent. Retrofittable to 480 S/N 5001 – 5041 and 480B S/N 5042 and subsequent.

UNCONTROLLED COPY WHEN DOWNLOADED OR PRINTED

Visit www.enstromhelicopter.com for instructions to order an original manual and to register for email notification of updates.

INTENTIONALLY LEFT BLANK

UNCONTROLLED COPY WHEN DOWNLOADED OR PRINTED

Visit www.enstromhelicopter.com for instructions to order an original manual and to register for email notification of updates.

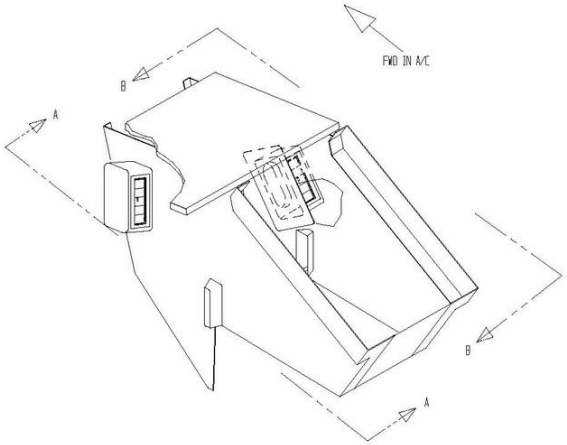

ORIENTATION VIEW

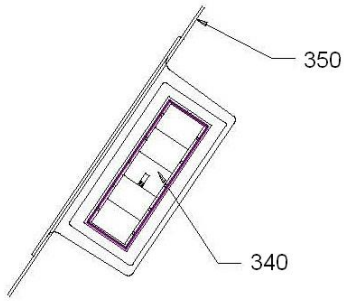

RIGHT SIDE LOUVER

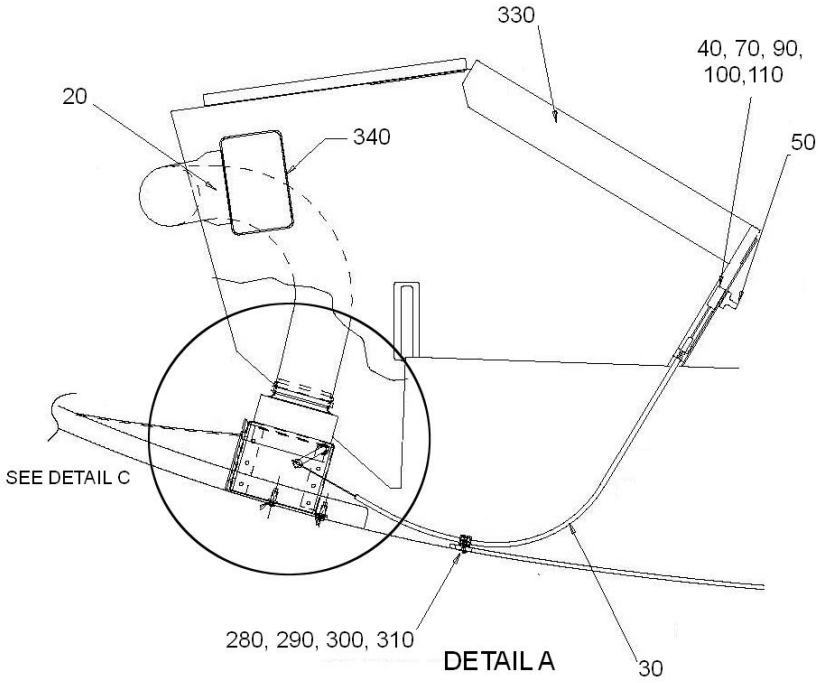

DETAIL A

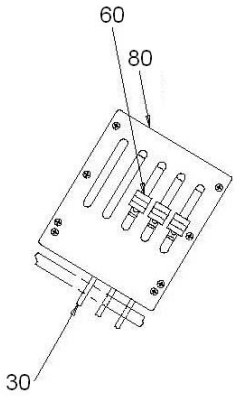

Sheet 1 of 2

FIGURE 11-5. FRESH AIR VENTILATION INSTALLATION

UNCONTROLLED COPY WHEN DOWNLOADED OR PRINTED

Visit www.enstromhelicopter.com for instructions to order an original manual and to register for email notification of updates.

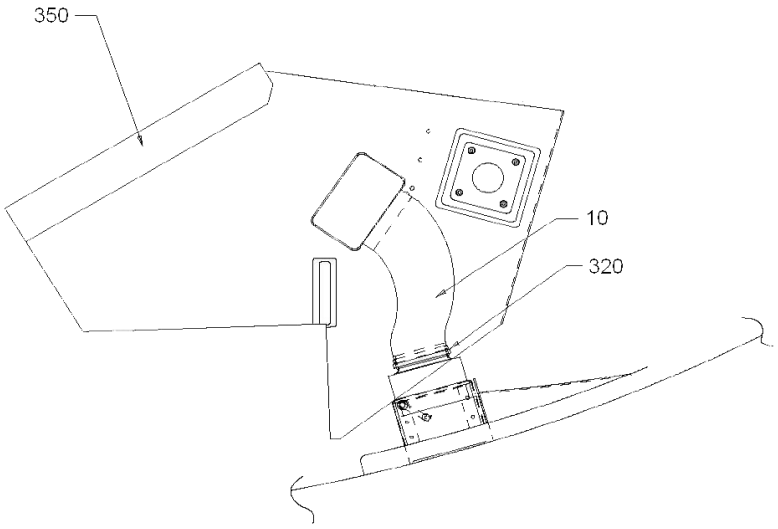

DETAIL B

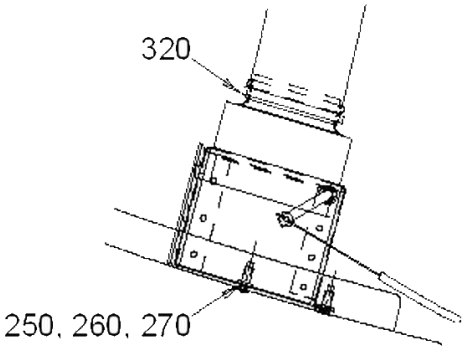

DETAIL C

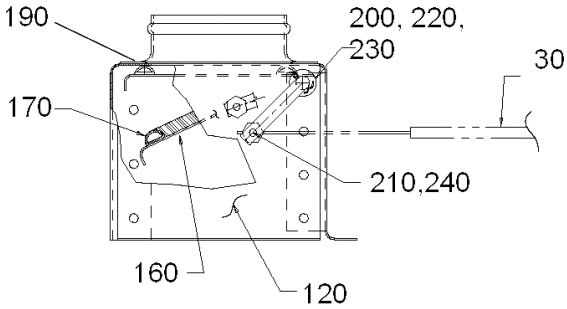

DETAIL C - LEFT SIDE

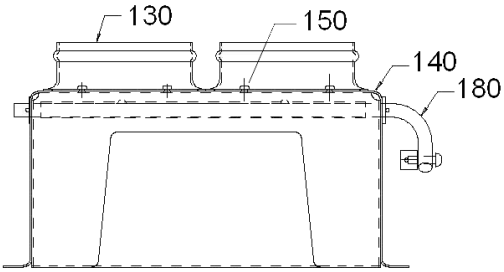

DETAIL C - ROTATED 90 DEGREES

Sheet 2 of 2

FIGURE 11-5. FRESH AIR VENTILATION INSTALLATION

UNCONTROLLED COPY WHEN DOWNLOADED OR PRINTED

Visit www.enstromhelicopter.com for instructions to order an original manual and to register for email notification of updates.

FIGURE 11-5. FRESH AIR VENTILATION INSTALLATION

ITEM NUMBER	PART NUMBER	DESCRIPTION	QTY PER ASSY	EFFECTIVITY		
				TH-28	480	480B
–	4129548-3	. Fresh Air Ventilation Installation	REF		X	X
10	4129548-15	. Duct (Right Side of Console)	1		X	X
20	4129548-17	. Duct (Left Side of Console)	1		X	X
30	4129560-5	. Vent Cable Assembly	1		X	X
40	K1A-N	. Spring Plunger	1		X	X
50	4129533-11	. Slide, Upper, HVAC System	1		X	X
60	4119894-17	. Vent Placard	1		X	X
70	4129533-13	. Slide Mechanical HVAC System	1		X	X
80	4182142-1	. Slider Control	1		X	X
90	1/8 x 832	. Set Screw	1		X	X
100	ECD093-11	. Stop Nut	1		X	X
110	AN509-8R10	. Screw	1		X	X
120	4129530-1	. Ventilation Plenum Assembly	1		X	X
130	4129523-21	. Adapter	2		X	X
140	732BL	. Sealant, Silicone	1		X	X
150	MS20426AD3-4	. Rivet	8		X	X
160	4129522-17	. Gate	1		X	X
170	X1333HT	. Seal	20		X	X
180	4129522-13	. Tube	1		X	X
190	AN530-4-6	. Screw	2		X	X
200	MS24665-151	. Cotter Pin	2		X	X
210	AN515-6R8	. Screw	1		X	X
220	AN960D416L	. Washer	AR		X	X
230	AN960D416	. Washer	AR		X	X
240	4129524-11	. Nut	1		X	X
250	AN526-632R12	. Screw	4		X	X
260	AN936-416	. Washer	4		X	X
270	S6P150	. PlusNut	4		X	X
280	AN960-8L	. Washer	1		X	X
290	AN364-832A	. Nut	1		X	X
300	AN525-832R8	. Screw	1		X	X
310	MS21919WFA	. Clamp	1		X	X
320	PLT4S-CO	. Cable Tie	2		X	X
330*	4119890-5	. Console Shroud (Left Side)	1		X	X

UNCONTROLLED COPY WHEN DOWNLOADED OR PRINTED

Visit www.enstromhelicopter.com for instructions to order an original manual and to register for email notification of updates.

FIGURE 11-5. FRESH AIR VENTILATION INSTALLATION

ITEM NUMBER	PART NUMBER	DESCRIPTION	QTY PER ASSY	EFFECTIVITY		
				TH-28	480	480B
340	10-796-00	. Louver	2		X	X
350	4119890-6	. Console Shroud (Right Side)	1		X	X

* Refer to Figure 10-30.

UNCONTROLLED COPY WHEN DOWNLOADED OR PRINTED

Visit www.enstromhelicopter.com for instructions to order an original manual and to register for email notification of updates.

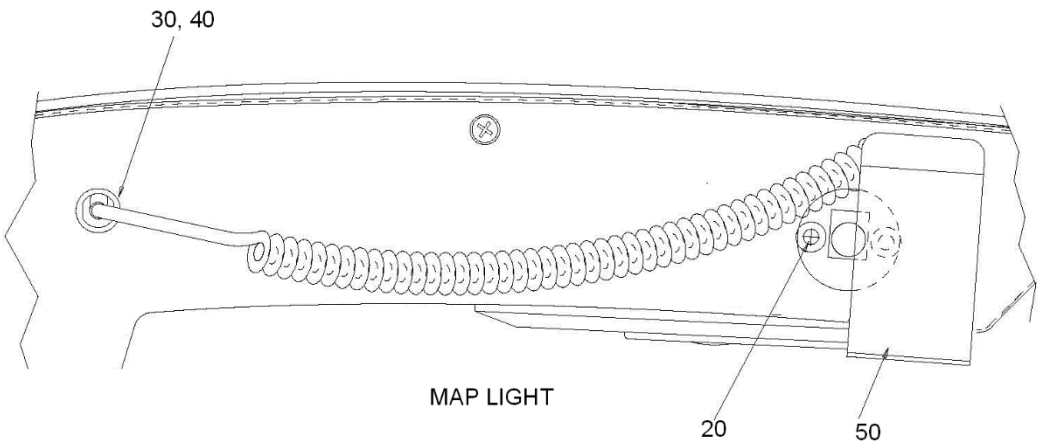

MAP LIGHT

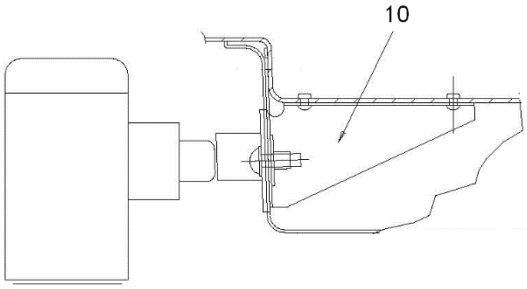

MAP LIGHT - ROTATED 90 DEGREES

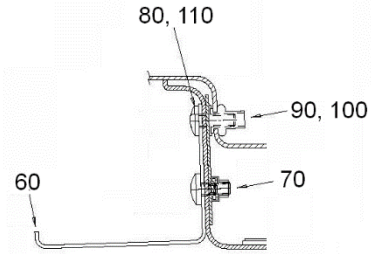

HEADPHONE OR HELMET HOOK

Sheet 1 of 2
480/480B S/N 5001 and subsequent

FIGURE 11-6. OVERHEAD CONSOLE VENT/LIGHT ASSEMBLY

UNCONTROLLED COPY WHEN DOWNLOADED OR PRINTED

Visit www.enstromhelicopter.com for instructions to order an original manual and to register for email notification of updates.

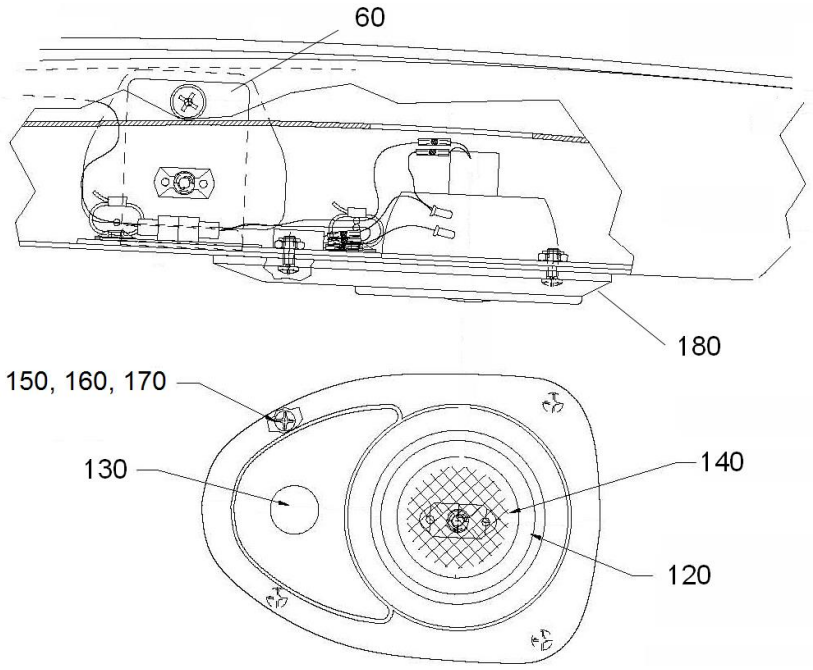

INCANDESCENT DOME LIGHT

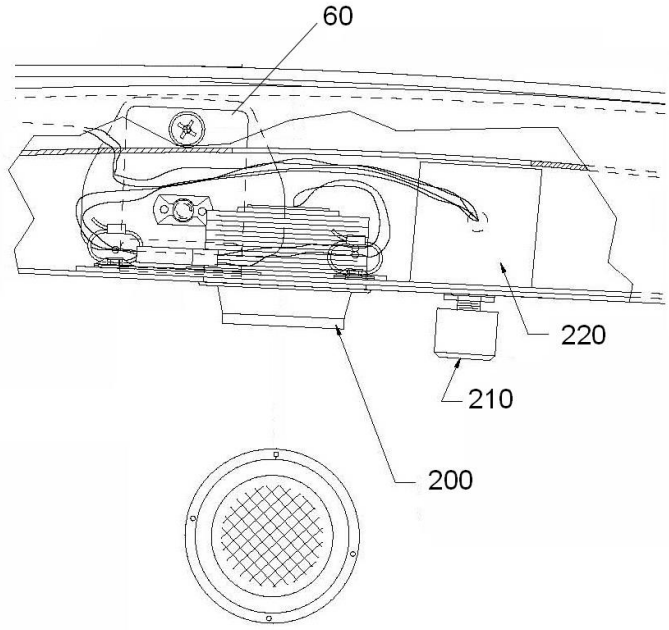

LED DOME LIGHT

Sheet 2 of 2
480/480B S/N 5001 and subsequent

FIGURE 11-6. OVERHEAD CONSOLE VENT/LIGHT ASSEMBLY

UNCONTROLLED COPY WHEN DOWNLOADED OR PRINTED

Visit www.enstromhelicopter.com for instructions to order an original manual and to register for email notification of updates.

FIGURE 11-6. OVERHEAD CONSOLE VENT/LIGHT ASSEMBLY

ITEM NUMBER	PART NUMBER	DESCRIPTION	QTY PER ASSY	EFFECTIVITY		
				TH-28	480	480B
10	4220171-1	. Bracket Mounting Map Light	1		X	X
20	MS27039-1-08	. Screw	1		X	X
30	7592	. Washer	1		X	X
40	1157	. Bushing, Relief	1		X	X
50	2000653-001	. Light, Map, 28V RD/WHT Cockpit	1		X	X
–	313	. . Lamp	1		X	X
–	7277-5-1/2	. Circuit Breaker, 1/2 Amp	1		X	X
–	MS51957-26	. . Screw	1		X	X
–	229001	. Fuse, Slo-Blo, 1A (Alternate to 7277-5-1/2 Circuit Breaker)	1		X	X
–	286377	. . Fuse Retainer	1		X	X
–	4119835-35	. . Placard (Map Light)	1		X	X
60	4115001-21	. Hook-Headphone	2		X	X
70	AN525-832R7	. Screw	2		X	X
80	AN525-10R8	. Screw	2		X	X
90	AN960D10	. Washer	2		X	X
100	AN960D10L	. Washer	6		X	X
110	A10K130	. Rivnut	2		X	X
120	24004-71-71	. Light: Dome Black, Incandescent	1		X	X
130	SW44	. . Switch, Power (Supplied with Item 120)	1		X	X
140	464	. . Miniature Indicator Lamp 28 V (Supplied with Item 120)	1		X	X
–	7277-5-1/2	. Circuit Breaker, 1/2 Amp	1		X	X
–	MS51957-26	. . Screw	1		X	X
–	229001	. Fuse, Slo-Blo, 1A (Alternate to 7277-5-1/2 Circuit Breaker)	1		X	X
–	286377	. . Fuse Retainer	1		X	X
–	4119835-33	. . Placard (Dome Light)	1		X	X
150	MS35206-228	. Screw, Machine	4		X	X
160	AN960-6L	. Washer	4		X	X
170	AN364-632A	. Nut, Hex	4		X	X
180	24004TR71	. Ring: Trim	1		X	X
190	VC-3	. Sealant: Thread	1		X	X
200	ELR17-2800WB-2	. LED Reading Light	1		X	X
200	ELR07-2800WB-2	. LED Reading Light (Discontinued and Superseded by ELR17-2800WB-2)	1		X	X
210*	6-1437622-0	. KN700B1/4 Knob	1		X	X
210≡	KN700B1/4	. Knob (Superseded by 6-1437622-0)	1		X	X

UNCONTROLLED COPY WHEN DOWNLOADED OR PRINTED

Visit www.enstromhelicopter.com for instructions to order an original manual and to register for email notification of updates.

FIGURE 11-6. OVERHEAD CONSOLE VENT/LIGHT ASSEMBLY

ITEM NUMBER	PART NUMBER	DESCRIPTION	QTY PER ASSY	EFFECTIVITY		
				TH-28	480	480B
220*	ELP30-28-03	. Dimmer module, 28VDC Input	1		X	X
220	ELP30-2803-281	. 28 Volt Dimmer Module (Superseded by ELP30-28-03)	1		X	X
–	7277-5-1/2	. Circuit Breaker, 1/2 Amp	1		X	X
–	MS51957-26	. . Screw	1		X	X
–	286377	. .Fuse Retainer	1		X	X
–	229001	. Fuse, Slo-Blo, 1A (Alternate to 7277-5-1/2 Circuit Breaker)	1		X	X
–	4119835-33	. . Placard (Dome Light)	1		X	X

≡ See Appendix A for equivalent part information.

* Effectivity 480B S/N 5192 and subsequent. Retrofittable to 480 S/N 5001 – 5041 and 480B S/N 5042 and subsequent.

UNCONTROLLED COPY WHEN DOWNLOADED OR PRINTED

Visit www.enstromhelicopter.com for instructions to order an original manual and to register for email notification of updates.

INTENTIONALLY LEFT BLANK

UNCONTROLLED COPY WHEN DOWNLOADED OR PRINTED

Visit www.enstromhelicopter.com for instructions to order an original manual and to register for email notification of updates.

APPENDIX A

EQUIVALENT PART NUMBERS

UNCONTROLLED COPY WHEN DOWNLOADED OR PRINTED

Visit www.enstromhelicopter.com for instructions to order an original manual and to register for email notification of updates.

INTENTIONALLY LEFT BLANK

UNCONTROLLED COPY WHEN DOWNLOADED OR PRINTED

Visit www.enstromhelicopter.com for instructions to order an original manual and to register for email notification of updates.

APPENDIX A – EQUIVALENT PARTS

Cover	A-1
Table of Contents	A-3
Introduction	A-4
Equivalent Parts Tables	A-4

UNCONTROLLED COPY WHEN DOWNLOADED OR PRINTED

Visit www.enstromhelicopter.com for instructions to order an original manual and to register for email notification of updates.

.

1. Introduction

This Appendix lists various equivalent part numbers which have been used to identify parts. The parts listed below have not changed, although they may have been supplied under any of the alternate part numbers listed. The changes may have resulted from a supplier change, a procedural change, or simply a correction of a typographical error. Any of the equivalent part numbers may be installed in place of the corresponding primary part number listed.

Enstrom Helicopter ECD-series parts (not listed) may have part numbers in the format ECDXXXX-YY, ECD-XXXX-YY, or ECD XXXX-YY. All three of these part number formats may be used interchangeably. Parts with the same numbers are identical, regardless of the number format

For example:

PART NUMBER	EQUIVALENT PART NUMBERS	DESCRIPTION
ECD4055-11	ECD-4055-11 ECD 4055-11	Illuminated Panel

When ordering new parts, please use the “PART NUMBER” column for faster service.

2. Equivalent Part Numbers Table

TABLE A-1 EQUIVALENT PART NUMBERS

PART NUMBER	EQUIVALENT PART NUMBERS	DESCRIPTION
01-0790006-01	A600-PG-28 A600PG28	Position/Strobe Light. Assembly (Green)
01-0790006-03	A600-PR-28 A600PR28	Position/Strobe Light Assembly (Red)
10065 H1L5	10065	Seal: Oil
02-0250276-00	A610	Strobe Tube Assembly
02-0350259-00	A605	Base Plate Assembly
02-0350260-00	A507	Socket Assembly
1219-4200-Z3Y	S4-200	Spring: Stud Fastener
19-170049-009	A606	Lens Retainer
259N04	259 N4 259-N-04X02	Insert, Tube
264N04	264N 4 264-N-04X02	Tee, Tube

UNCONTROLLED COPY WHEN DOWNLOADED OR PRINTED

Visit www.enstromhelicopter.com for instructions to order an original manual and to register for email notification of updates.

TABLE A-1 EQUIVALENT PART NUMBERS

PART NUMBER	EQUIVALENT PART NUMBERS	DESCRIPTION
265N04	265N 4 265-N-04X02	Union, Elbow
268N04X02	268N 4X2 268-N-04X02	Adapter, Straight
269-N-04X02	269N 4X2	Elbow, 90 Degree
3001-127-470/180C-6.3M	3001-127-47018	Detector: Fire/Overheat, Eng.
34-0428020-65	W1290-28 W129028	Lamp, Reflector 28V 26W
34-0428070-64	A508-28 A50828	Lamp 28V
38-0130090-00	A616	Gasket/Spacer
38-0130107-00	A427-4 A4274	Gasket, 4 1/4” Spacer
38-0230021-00	W1283	Gasket, Position Light Lens
381N-500-S	381N-500 381N500	Potentiometer, 1W, 500 OHM
3SNE-094A-72	3-SNE-094A-72 3SNE094A-72	Cable Throttle
428-3-VG	428-3VG	Sleeve, Crimp
68-2290005-30	A612	Lens, Clear
68-4230020-40	W1284-G W1284G	Lens, Green Position Light
68-4230020-50	W1284-R W1284R	Lens, Red Position Light
68-4250066-30	A615	Lens, Clear
6X1/2	6RX1/2	Screw, Self-Tapping
6X3/8	6R X 3/8 6RX3/8	Screw, Self-Tapping
8473RUPH5-L16	8473 H5L16	Seal
8X1/2	8RX1/2 1/2 X8	Screw: Sheet Metal
9276 H1L5	9276	Seal, Oil
97CSX-2 24VDC	W97CSX-2	Relay, Power, 24V
AA521-4	AA-521-4	Bronze Bushing
A01787-8Z-1D	A1787-8Z1 A1787-8Z-1	Nut , Speed, Tinnerman
A01789-8Z-1D	A1789-8Z-1	Nut Tinnerman
A06194-8Z-1D	A6194-8Z-1	Nut Tinnerman

UNCONTROLLED COPY WHEN DOWNLOADED OR PRINTED

Visit www.enstromhelicopter.com for instructions to order an original manual and to register for email notification of updates.

TABLE A-1 EQUIVALENT PART NUMBERS

PART NUMBER	EQUIVALENT PART NUMBERS	DESCRIPTION
A-700RD1180	A700RD11800 A-700	Cable, Shutoff
AN515B6R10	AN515-B6R10	Screw, Machine
ANL-100	ANL100	Low Voltage Limiter
ANL-150	ANL150	Low Voltage Limiter
ANL-35	ANL35	Low Voltage Limiter
B-1210	B1210	Bearing: Needle
CR20526	20526	Seal, Oil
CCR264-3-3	CCR-264 SS-3-3	Rivet
CR 17240	17240	Seal: Retention
CR3212-4-02	CR3212-4-2	Rivet
CR3213-4-02	CR3213-4-2	Rivet
CR3213-6-3	CR3213-6-03	Rivet
CRWI14809	14809	Seal: Oil
FN22M-624	FN-22M-624	Nut, Lock
GCSG501-2	GCSG 501-2	Control Unit: Starter Generator
G08DU	DU-08 DU08 08DU	Thrust Washer
HD6158510090030	HD6158-510-090-030	Switch, Ignition
HFLVV3M	HFLVV-3M	Rod End
HFVV3M	HFVV-3M	Rod End
HGVV3M	HGVV-3M	Rod End
HM3M	HM-3M	Rod End
HML3M	HML-3M	Rod End
HMLVV3M	HMLVV-3M	Rod End
HMLVV4M	HMLVV-4M	Rod End
HMLVV5M	HMLVV-5M	Rod End
HMVV3M	HMVV-3M	Rod End
HMVV4M	HMVV-4M	Rod End
HMVV5M	HMVV-5M	Rod End
IPT-20RT1-1000-150G	IPT-20RT1-1000	Transducer
KA1-N	K1AN	Plunger: Ball
KN500B1/8	KN500B-1/8	Knob, Aluminum
M83248/1-032	M83248/1032	O-Ring

UNCONTROLLED COPY WHEN DOWNLOADED OR PRINTED

Visit www.enstromhelicopter.com for instructions to order an original manual and to register for email notification of updates.

TABLE A-1 EQUIVALENT PART NUMBERS

PART NUMBER	EQUIVALENT PART NUMBERS	DESCRIPTION
MOBIL 1 LS 75W-90	MOBIL 1 75W-90 MOBIL 1 75-90	Gear Lube
MS20002C4	MS20002-C4	Washer, Countersunk
MS20073-03-04	MS20073-0304	Bolt
MS21240-08C-12	MS21240-08C12	Bearing
MS24693-BB52	MS24693BB52	Screw, Machine
MS24693-S24	MS24693S24	Screw, Machine
MS24693-S275	MS24693S275	Screw, Machine
MS24694-S51	MS24694S51	Screw, Machine
MS24694-S54	MS24694S54	Screw, Machine
MS24694-S55	MS24694S55	Screw, Machine
MS24694-S56	MS24694S56	Screw, Machine
MS24694-S94	MS24694S94	Screw, Machine
MS24694-S95	MS24694S95	Screw, Machine
MS24694-S58	MS24694S58	Screw, Machine
MS995C32	MS20995-C32	Safety Wire
NAS1612-2	NAS1612-2A	O-Ring, E0515-80, E515-80
NAS1612-8	NAS1612-8A	O-Ring, E0515-80, E515-80
NK-500-8R6	NK500-8R6 NP-500-8R6 NP500-8R6	Screw Nylok
NK-500-8R8	NK500-8R8 NP-500-8R8 NP500-8R8	Screw Nylok
PCS-111A	PCS111A	Sensor: Programmed Continuity
SC628ANPR	SC628ANP	Pulse Horn, Loud Fast Tone
SC628WR	SC628W	Sonalert Horn
SF96-20	SF96-20-PT	Oil, Silicone
SL61N5P	SL61N-5P	Nut, Lock
SL61W5P	SL61W-5P	Washer, Lock
ZFD-1094-0-7-32	ZFD10940732	Boot: Cyclic, Turbine

UNCONTROLLED COPY WHEN DOWNLOADED OR PRINTED

Visit www.enstromhelicopter.com for instructions to order an original manual and to register for email notification of updates.

INTENTIONALLY LEFT BLANK

UNCONTROLLED COPY WHEN DOWNLOADED OR PRINTED

Visit www.enstromhelicopter.com for instructions to order an original manual and to register for email notification of updates.

APPENDIX B – HARDWARE SUBSTITUTIONS

Table of Contents	B-1
1 Introduction	B-2
2 Acceptable Substitution Conditions	B-2
3 Hardware Tables	B-2
Table A – Bolts	B-3
Table B – Screws	B-5
Table C – Nuts	B-7
Table D – Nut Plates	B-8
Table E – Solid Rivets	B-9
Table F – Blind Rivets	B-9
Table G – Washers	B-10
Table H – Rivnuts	B-12
Table I – Turnbuckles	B-12
Table J – Grommets	B-12
Table K – Cotter Pins	B-12
Table L – Clamps (Nylon)	B-13
Table M – Cable Ties	B-13
Table N – U-Channels (Rubber)	B-14
Table O – Shrink Tubing	B-14
Table P – Ring Tongue Terminals	B-14
Table Q – Retaining Rings	B-15
Table R – Cushioned Clamps	B-15
Table S – PlusNuts	B-15
Table T – Solder Sleeve Shield Terminators	B-15
Table U – Pipe Plugs (Countersink Hex Head)	B-15
Table V – Clip Nut	B-15
Table W – Plug and Bleeder – Screw Tread	B-15
Table X – Pin, Retaining, Safety	B-15
Table Y – Quarter Turn Fastener	B-15
Table Z – Quick Disconnect Terminal	B-15
Table AA – Plug (BNC, TNC, N)	B-15
Table AB – Roll Pin	B-15
Table AC – Sleeve, Coupling	B-16
Table AD – Clevis Pin	B-16
Table AE – Quarter (1/4) Turn Fastener Receptacle	B-16

UNCONTROLLED COPY WHEN DOWNLOADED OR PRINTED

Visit www.enstromhelicopter.com for instructions to order an original manual and to register for email notification of updates.

1. Introduction

This specification establishes the conditions under which hardware may be substituted and lists the specific hardware which may be substituted. These standard substitutions apply only to components and assemblies which are designed by Enstrom and assembled in house. The tables which follow list the substitutions which are permissible. The hardware called out on the drawing is the preferred configuration. Each table contains a left-hand column which lists the basic or preferred hardware. The adjacent column to the right lists the alternate hardware. Alternate hardware may be used as a substitute for the hardware in the left column; however, hardware in the left column may NOT be substituted for hardware listed as alternate. In cases where hardware is interchangeable, 'Equivalent Substitution' will be stated in the right-hand column. In the case where there is no substitution, N/A (no alternate) will be stated in the right hand column.

2. Acceptable Substitution Conditions

Hardware may be substituted without further approval when all the following conditions apply:

- The preferred hardware is unavailable.
- There is an acceptable alternate listed in this report.
- All of the other material conditions (hole diameter, material thickness, etc.) are within standard tolerances for the component.

To correct for component stack-up so as to ensure one to three threads showing past the nut, the grip length of the fastener may be substituted without further approval by the following methods:

- The length of rivets, screws, bolts, or quarter (1/4) turn fasteners may be increased or decreased one grip length (a "dash number").
- Washers may be added or subtracted or washer thicknesses may be substituted. Up to a total of three washers may be installed in combination under the head of the bolt and/or nut. (Washer substitutions must be in accordance with standard aircraft practices.)
  - Consult Engineering if it is necessary to remove all the washers or if there is a conflict with the washer requirements on the approved drawing.
- Consult Engineering if a specific hardware installation consistently requires adjustment in accordance with the conditions of this paragraph.

Substitutions may NOT be made in fastener diameter without engineering approval. Substitutions may NOT be made beyond one grip length or "dash number" without engineering approval.

3. Hardware Tables

Tables for substitute hardware are provided on the following pages. If the substitution is applicable to all dash numbers of a particular part number, it will be represented by a set of open parentheses. For example, AN3-( ) would indicate that the substitution includes all dash numbers for the AN3 bolt.

UNCONTROLLED COPY WHEN DOWNLOADED OR PRINTED

Visit www.enstromhelicopter.com for instructions to order an original manual and to register for email notification of updates.

Table A – Bolts		
BOLT	**ALTERNATE**	
AN173-( )	N/A	
AN174-( )	N/A	
AN175-( )	N/A	
AN176-( )	N/A	
AN178-( )	N/A	
AN3	NAS6603	
-3A	-1	
-10	D10	
-10A	-10	
-11A	-12	
-12	D14	
-12A	-14	
-13	D16	
-13A	-16	
-14A	-18	
-15A	-20	
-16A	-22	
-17A	-24	
-20A	-26	
-21	D28	
-21A	-28	
-22	D30	
-22A	-30	
-23A	-32	
-24A	-34	
-26	D38	
-27A	-40	
-30A	-42	
-31A	-44	
-33A	-48	
-34A	-50	
-4	D2	
-4A	2	
-5	D4	
-5A	-4	
-6	D6	
-6A	-6	
-7	D8	
-7A	-8	
H3A	H1	
H4A	H2	
H5A	H4	
H6A	H6	
H10	DH10	
H13A	H16	
AN3	NAS6703	
C4A	-10	
C10A	D10	
AN4	NAS6604	
-3A	-1	
-4A	-1	
-5A	-3	
-6A	-5	
-7	D7	
-7A	-7	
-10A	-9	
-11	D11	
-11A	-11	
-12	D13	
-12A	-13	
-13	D15	
-13A	-15	
-14	D17	
-14A	-17	
-15	D19	
-15A	-19	
-16	D21	
-16A	-21	
-17	D23	
-17A	-23	
-20	D25	
-20A	-25	
-21A	-27	
-22A	-29	
-23	D31	
-23A	-31	
-25A	-36	
-26A	-38	
-27A	-40	
-30A	-42	
-31A	-44	
-33A	-48	
-34A	-50	
-35A	-52	
-36	D54	
-36A	-54	
-37	D56	
-37A	-56	
-42A	-62	
H3A	H1	
H4A	H1	
H5A	H3	
H6A	H5	
H7A	H7	
H10A	H9	
H12A	H13	

UNCONTROLLED COPY WHEN DOWNLOADED OR PRINTED

Visit www.enstromhelicopter.com for instructions to order an original manual and to register for email notification of updates.

H13A	H15	
H14A	H17	
H15A	H19	
H16A	H21	
AN4	NAS6704	
C5A	-3	
AN42BC11A	N/A	
AN42BC14A	N/A	
AN5	NAS6605	
-4A	-1	
-6A	-5	
-7	D7	
-10	D9	
-11	D11	
-11A	-11	
-12	D13	
-13	D15	
-13A	-15	
-15	D19	
-15A	-19	
-16	D21	
-16A	-21	
-17A	-23	
-21A	-27	
-22	D29	
-22A	-29	
-33A	-48	
-35A	-52	
-37A	-56	
-44A	-65	
H4A	H1	
H5A	H3	
H6A	H5	
H7A	H7	
H10A	H9	
H46A	H69	
AN5	NAS6705	
C13A	-15	
AN6	NAS6606	
-6A	-3	
-7A	-5	
-10A	-7	
-11A	-9	
-20A	-23	
-22	D25	
-22A	-25	
-23A	-29	
-24A	-31	
-27A	-38	
-30A	-40	
-33	D46	
H6A	H3	
H34A	-48	
AN7	NAS6607	
-27A	-38	
H7A	-5	
AN73( )	MS20073-03-( )	
AN74( )	MS20073-04-( )	
AN75( )	MS20073-05-( )	
AN76( )	MS20073-06-( )	
AN73A( )[1]	MS20074-03-( )	Equivalent Substitution
AN74A( )[1]	MS20074-04-( )	
AN75A( )[1]	MS20074-05-( )	
AN76A( )[1]	MS20074-06-( )	
AN8	NAS6608	
-10A	-5	
LWB-22-6-58	N/A	
MS20006-( )	N/A	
MS20074-( )	N/A	
MS21250-( )	N/A	
MS24677-( )	N/A	
NAS144	MS20004	
DH10	H4	
DH12	H4	
NAS146	MS20006	
DH22	H12	
DH24	H14	
NAS1004-( )	N/A	
NAS1103-11	NAS6203-11	
NAS1104	NAS6204	
-9D	-9D	
-12	-12	
NAS1204-40D	N/A	
NAS1306	NAS6606	
-8	-8	
-48	-48	
NAS428-( )	N/A	
NAS6203-( )	N/A	
NAS6204-( )	N/A	
NAS6205-( )	N/A	
NAS6206-( )	N/A	

[1] Coarse thread

UNCONTROLLED COPY WHEN DOWNLOADED OR PRINTED

Visit www.enstromhelicopter.com for instructions to order an original manual and to register for email notification of updates.

NK-6-6A	N/A	
NP5-6A	N/A	

Table B – Screws

SCREW	ALTERNATE	
AN502	NAS1101	
-10-8	-3-8	
-10-10	-3-10	
-10-12	-3-12	
-10-14	-3-14	
-10-18	-3-18	
AN503	NAS1101	
-8-4	-08-4	
-8-6	-08-6	
-8-8	-08-8	
-10-6	N/A	
-10-8	N/A	
-10-10	N/A	
-10-18	N/A	
-416-10	N/A	
-416-28	N/A	
AN505-4R6	MS35190-223	
AN505-4R7	MS35190-224	
AN507	MS24693	
-632-12	-S30	
-632R4	-S24	
-632R5	-S25	
-632R6	-S26	
-632R7	-S27	
-632R8	-S28	
-632R12	-S30	
-632R14	-S31	
-632R16	-S32	
-632R24	-S36	
-8-8	-S50	
-8R6	-S48	
-8R7	-S49	
-832-9	-S61	
-832R7	-S49	
-832R8	-S50	
-832R9	-S51	
-832R10	-S51	
-832R11	-S52	
-1032R6	-S270	
-1032R8	-S272	
-1032R10	-S273	
-1032R14	-S275	
-1032R44	-S287	
B632R6	-BB26	
B832R6	-B48	
B832R10	-B51	
C632R8	-C28	
C832-12	-C52	
C832R8	-C50	
C832R14	-C53	
C832R16	-C54	
C832R18	-C55	
C1024R14	-C75	
C1032-12	-C274	
AN509	MS24694	
-8R4	-S1	
-8R5	-S2	
-8R6	-S3	
-8R7	-S4	
-8R8	-S5	
-8R9	-S6	
-8R10	-S7	
-8R14	-S11	
-8R16	-S13	
-8R18	-S15	
-8R20	-S17	
-10R10	-S52	
-10R16	-S58	
-10R38	-S80	
-516R16	-S148	
AN510	MS35199	
B10R10	-56	
AN515	MS35206	
-2R4	-203	
-4-20	-222	
-4R8	-217	
-4R10	-218	
-4R12	-219	
-5R6	N/A	
-6-3	-225	
-6-6	-228	
-6-7	-229	
-6-24	-236	
-6R4	-226	
-6R5	-227	
-6R6	-228	
-6R7	-229	
-6R8	-230	
-6R11	-232	
-6R18	-328	
-8-7	-244	
-8-16	-249	
-8-24	-251	

UNCONTROLLED COPY WHEN DOWNLOADED OR PRINTED

Visit www.enstromhelicopter.com for instructions to order an original manual and to register for email notification of updates.

-8R5	-242	
-8R6	-243	
-8R7	-244	
-8R8	-245	
-8R10	-246	
-8R12	-247	
-8R14	-248	
-8R16	-249	
-8R18	-332	
-8R20	-250	
-8R24	-251	
-8R32	-253	
-10R8	-263	
10R10	-264	
AN515	MS35214	
B6R6	-25	
B6R7	-26	
B6R8	-27	
B6R10	-28	
B6R12	-29	
B6R14	-30	
B6R16	-31	
AN515	MS35214	
B6R18	-109	
B8R8	-42	
B8R12	-44	
AN515	MS51957	
C6R12	-32	
C8R5	-42	
AN520-( )	MS35207-( )	
AN520B( )	MS35215-( )	
AN520C( )	MS51958-( )	
AN520DD( )	MS35219-( )	
AN520PB( )	MS35215-( )C	
AN525	MS27039	
-10-7	-1-06	Use washer under head.
-10-8	-1-08	
-10R4	-1-04	
-10R6	-1-06	Use washer under head.
-10R7	-1-07	
-10R8	-1-08	
-10R10	-1-10	
-10R12	-1-12	
-10R14	-1-14	
-10R16	-1-16	
-10R18	-1-18	
-10R24	-1-24	
-416R8	-4-08	

-416R10	-4-10	
-416R12	-4-12	
-832-6	-0806	
-832R4	-0804	
-832R6	-0806	
-832R7	-0807	
-832R8	-0808	
-832R10	-0810	
-832R14	-0814	
-832R16	-0816	
-832R18	-0818	
-832R20	-0820	
-832R22	-0822	
-832R24	-0824	
AN526	MS35206	
-632-4	-226	Use washer under head.
-632-5	-227	
-632R5	-227	
-632R6	-228	
-632R7	-229	
-632R8	-230	
-632R10	-231	
-632R12	-232	
-632R16	-234	
-632R22	-329	
-632R30	-361	
AN526	AN525	
-832-6	-832R6	
-832R6	-832R6	
-832-7	-832R7	
-832R8	-832R8	
-832R10	-832R10	
-832R12	-832R12	
-832R16	-832R16	
-1032-8	-10-8	
-1032R6	-10R6	
-1032R9	-10R9	
-1032R12	-10R12	
C1032R5	-10R5	
C1032R12	-10R12	
AN526	MS51957	
C832R8	-45	Use washer under head.
C832R10	-46	
C832R12	-47	
AN530	MS51861	
-4-6	-14	Self-Tapping
-6-6	-24	
-6-8	-25	

UNCONTROLLED COPY WHEN DOWNLOADED OR PRINTED

Visit www.enstromhelicopter.com for instructions to order an original manual and to register for email notification of updates.

-6R6	-24	
-6R8	-25	
-6R10	-26	
-8R6	-34	
-8R8	-35	
AN531	MS51862	
-6-6	-13	Self-Tapping
-6R6	-13	
-6R8	-14	
-6R10	-15	
AN535-( )	MS21318-( )	
BN4CPK5	N/A	
MS16998-( )	N/A	
MS18063-8	25274N	
MS18066-( )	N/A	
MS24693-( )	N/A	
MS24694-( )	N/A	
MS27039-( )	N/A	
MS35206-( )	N/A	
MS35214-( )	N/A	
MS35265-( )	N/A	
MS51957-( )	N/A	
NP500-( )	NK500-( )	Equivalent Substitution
NP501-( )	NK501-( )	
NP509-( )	NK509-( )	
NP510-( )	NK510-( )	
NP525-( )	NK525-( )	
PK86XA( )	N/A	
PK89XA( )	N/A	
4122080-19	NAS1352-08H6	

Table C – Nuts

NUT	**ALTERNATE**	
AN310-5	MS17825-5	
AN315-( )	N/A	
AN316-( )	N/A	
AN320-( )	N/A	
AN335-420	MS51967-2	
AN340	MS35649	
-4	-242	
-8	-282	
-632	-262	
-832	-282	
B832	-286B	
AN341-516	MS35650-3315T	
AN345	MS35650	
-10	-302	
C416	-3254	
AN350-1032	MS35426-13	
AN363-524	MS21045L5	
AN364-( )	MS20364-( )	Equivalent Substitution
AN364-( )	MS21083	
-428A	N4	
-524A	N5	
-624A	N6	
-632A	N06	
-820A	N8	
-832A	N08	
-1018A	N10	
-1032A	N3	
-1216A	N12	
AN365-( )	MS21044	
-428A	N4	
-524A	N5	
-624A	N6	
-632A	N06	
-832A	N08	
-1032A	N3	
AN365-( )	MS20365-( )	Equivalent Substitution
AN818-( )	AN818-( )J	
AN924-( )D	AN924-( )W	
FN-22M-624	N/A	
F12NE-4717	MS17826	
-02	-3	
-048	-4	
-054	-5	
-064	-6	
-070	-7	
-080	-8	
F12NE-4753	MS17825	
-02	-3	
-048	-4	
-054	-5	
-064	-6	
-080	-8	
MS17826-( )	N/A	
MS20364-( )	MS21083N( )	
MS20365-( )	MS21044N( )	
MS20500-( )	N/A	
MS21042-( )	N/A	
MS21043-( )	N/A	
MS21044-( )	N/A	

UNCONTROLLED COPY WHEN DOWNLOADED OR PRINTED

Visit www.enstromhelicopter.com for instructions to order an original manual and to register for email notification of updates.

MS51922-1	M45913/2-4CG5C	
NAS509-( )	N/A	
NAS679-( )	N/A	
22NKM( )	N/A	
37FL624	N/A	

Table D – Nut Plates

NUT PLATE	ALTERNATE	
A1784-6Z1D	NAS395-6	
A1785-6Z-1	NAS395-7	
A1787-8Z1D	NAS395-18	
A1789-8Z-1	NAS395-16	
A6162-8Z-1	NAS444-14	
A6191-8Z-1	NAS444-4	
A6194-8Z-1	NAS445-4	
A6195-6Z-1	NAS444-2	
A6195-8Z-1	NAS444-5	
A6196-8Z-1	NAS445-5	
F22LHA27M22-62	N/A	
F22NA1	MS21078	
-02	-3	Equivalent Substitution
-048	-4	
-62	-06	
-82	-08	
-82BC	-08K	
F22NA17A	MS21080	
-02	-3	Equivalent Substitution
-048	-4	
-62	-06	
-82	-08	Equivalent Substitution
F22NA17	NAJ17	
-02BC	-02BC	[2]
-62	-62	
-62BC	-62BC	
-82	-82	
-82BC	-82BC	
MS21055L3	N/A	
MS21059L08K	MS21059L08	Nutplate attachment rivet use NAS1097AD3[3]
MS21069-08K	MS21069-08	
MS21073-( )	N/A	
MS21075L( )	NAS1068( )	Equivalent Substitution
MS21078	F22NA1	
-3	-02	
-4	-048	Equivalent Substitution
-06	-62	
-08	-82	
-08K	-82BC	
MS21078	MS21078	
-3K	-3	Nutplate attachment rivet use NAS1097AD3[1]
-4K	-4	
-08K	-08	
MS21078	NAJI	
-06	-62	[4]
-06K	-62BC	
-08	-82	
-08K	-82BC	
-3	-02	
-3K	-02BC	
MS21080	MS21080	
-3K	-3	Nutplate attachment rivet use NAS1097AD3[5]
-4K	-4	
-08K	-08	
NAJ17-02BC	MS21080-3K	
NAJ38-82BC	NAS1024D08K	
NAJ5-048	NAS1027D4	
NAS1023-( )	MS21078-( )	Equivalent Substitution

[2] Equivalent Substitution is permissible when the NAJ( ) nut plate is unavailable.

[3] Minimum sheet thickness .025

[4] Equivalent Substitution is permissible when the NAJ( ) nut plate is unavailable.

[5] Minimum sheet thickness .025

UNCONTROLLED COPY WHEN DOWNLOADED OR PRINTED

Visit www.enstromhelicopter.com for instructions to order an original manual and to register for email notification of updates.

NAS1023	NAJ1	
D06	-62	[6]
D06K	-62BC	
D08	-82	
D08K	82BC	
NAS1023D08K	NAS1023D08	Nutplate attachment rivet use NAS1097AD3[1]
NAS1023D08K	MS21078-08K	
NAS1024D08K	NAS1024D08	Nutplate attachment rivet use NAS1097AD3[1]
NAS1025D06K	NAJ17-62BC	
NAS1025D08K	NAS1025D08	Nutplate attachment rivet use NAS1097AD3[1]
NAS1024D08K	NAS1024N08K	
NAS1024N08K	NAS1024A08K	
NAS1024N08K	MS21078-08	Use with NAS500WKD8 nutplate spacer.
NAS1025	NAJ17	
D3K	-02BC	[7]
D06	-62	
D06K	-62BC	
D08	-82	
D08K	-82BC	
NAS1026N08K	NAS1026A08K	
NAS1033N06	N/A	
NAS1474A3	N/A	
NAS686( )	MS21059( )	Equivalent Substitution
12LHTA1M-62	MS21069-06	Equivalent Substitution
12LHTA1M-62BC	MS21069-06K	
12LHTA17M-62	MS21071-06	
12LHTA17M-62BC	MS21071-06K	
22NA17A-02	F22NA17A	Equivalent Substitution
22NA17A-02	MS21080-3	[8]
22NA17A-82BC	F22NA17A	Equivalent Substitution
22NA17A-82BC	MS21080-08K	[9]
22NA21-22-02	N/A	
22NA21-22-048	N/A	
22NA27-22-02	F22NA27	Equivalent Substitution
22NA27-22-02	NAS1033N3	
22NA27-68-02	F22NA27	Equivalent Substitution
22NA27-68-02	NAS1033D3	[10]
22NA217-22-048	NAS1032P4	
52LHTA51-M82	MS21069-08	
52LHTA51M-82BC	MS21069-08K	
68NA1-02	NAS1023D3	
68NA1-048	F22NA1-048	
68NA1-62BC	NAS1023D06K	
68NA17A-82	NAS1025D08	
68-NA21-68-02	NAS686A3	

Table E – Solid Rivets

SOLID RIVET	ALTERNATE	
AN426A( )	MS20426A( )	Equivalent Substitution
AN426AD( )	MS20426AD( )	
AN427M4-7	MS20427M-7	Equivalent Substitution
AN470A( )	MS20470A( )	Equivalent Substitution
AN470AD( )	MS20470AD( )	
MS20427M-7	AN427M4-7	
MS20435M3-8	MS20615-3M8	
MS20615-( )	N/A	
NAS1097AD( )	N/A	Nutplate Rivet

Table F – Blind Rivets

BLIND RIVET	ALTERNATE	
CCR264SS	MS20605S	
-3-02	-3-W2	
-3-03	-3-W3	
-3-04	-3-W4	
-3-05	-3-W5	
CCR274SS( )	N/A	Nutplate Rivet
CR2163	NAS1398D	
-4-02	-4-2	
-4-04	-4-4	
CR2249	NAS1738B	
-5-02	-5-2	

[6] Equivalent Substitution is permissible when the NAJ( ) nut plate is unavailable.

[7] Equivalent Substitution is permissible when the NAJ( ) nut plate is unavailable.

[8] "F" prefix (Type II cadmium plate) is also an acceptable alternate to original finish (Type I cadmium plate).

[9] "F" prefix (Type II cadmium plate) is also an acceptable alternate to original finish (Type I cadmium plate).

[10] "F" prefix (Type II cadmium plate) is also an acceptable alternate to original finish (Type I cadmium plate).

UNCONTROLLED COPY WHEN DOWNLOADED OR PRINTED

Visit www.enstromhelicopter.com for instructions to order an original manual and to register for email notification of updates.

-5-03	-5-3	
-5-06	-5-6	
-5-07	-5-7	
-5-08	-5-8	
CR3212	NAS9302B	
-4-02	-4-2	
-4-03	-4-3	
-4-04	-4-4	
-4-05	-4-5	
-5-02	-5-2	
-5-03	-5-3	
CR3213	NAS9301B	
-4-01	-4-1	
-4-02	-4-2	
-4-03	-4-3	
-4-04	-4-4	
-4-05	-4-5	
-4-06	-4-6	
-4-07	-4-7	
-4-09	-4-9	
-5-02	-5-2	
-5-03	-5-3	
-5-04	-5-4	
-6-02	-6-2	
-6-03	-6-3	
-6-04	-6-4	
-6-05	-6-5	
CR3243-( )	N/A	
CR3523-( )	N/A	
CR3552-( )	N/A	
CR9162-4-2	MS20601AD4W2	
CR9163	MS20600	
-4-01	AD4W4	
-4-02	AD4W2	
-4-03	AD4W3	
MS20426( )	CCR264SS( )	Nutplate Rivet
NAS1097( )	CCR244SS( )	Nutplate Rivet
NAS1398D5A2	RV1200-5-2	Equivalent Substitution
NAS1738( )	N/A	
RV1200-5-2	NAS1398D5A2	Equivalent Substitution
SD42BS[11]	CCP-42	
SD44BS[12]	CCP-44	

Table G – Washers

WASHER	ALTERNATE	
AN935	MS35338	
-4	-40	Equivalent Substitution
-6	-41	
-8	-42	
-8L	-42	
B8L	-99	
-10	-43	
-416	-44	
-416L	-44	
AN936	MS35333	
A6	-37	Equivalent Substitution
A8	-38	
A10	-39	
A416	-40	
A516	-41	
A616	-42	
A716	-43	
A816	-44	
A1216	-47	
-B4	-29	
AN940-13	MS27183-1	
AN960[13]	NAS1149	
-3L	FN316P	Equivalent Substitution
-4L	FN416P	
-6	FN632P	
-6L	FN616P	
-8	FN832P	
-8L	FN816P	
-10	F0363P	
-10L	F0332P	
-416	F0463P	
-416L	F0432P	
-516	F0563P	
-516L	F0532P	
-616	F0663P	
-616L	F0632P	
-716	F0763P	
-716L	F0732P	
-816	F0863P	
-916	F0963P	
-1216L	F1232P	
B6	BN632H	
B8	BN832H	

[11] Commercial Product: SD42BS equivalents include SB4-2, SS D42, SSP-42, SS42F, S/S 42D and 4-2SSD

[12] Commercial Product: SD44BS equivalents include SB4-4, SS D44, SSP-44, SS44F, S/S 44D and 4-SSD

[13] See Appendix A for complete listing.

UNCONTROLLED COPY WHEN DOWNLOADED OR PRINTED

Visit www.enstromhelicopter.com for instructions to order an original manual and to register for email notification of updates.

B416L	N/A	
C6	CN632R	
C10	C0363R	
C10L	C0332R	
C416	C0463R	
C416L	C0432R	
C516	C0563R	
C516L	C0532R	
C616L	C0632R	
C816	C0863R	
C1216	C1290R	
C1616	C1690R	
CD6L	N/A	
D3L	DN316H	Equivalent Substitution
D10	D0363H	
D10L	D0316H	
D416	D0463H	
D416L	D0416H	
D516	D0563H	
D516L	D0516H	
D616	D0663H	
D616L	D0616H	
D6L	DN616H	
D8	DN832H	
D8L	DN816H	
D9	DN949H	
KD10L	D0332K	
PD8L	DN816J	
PD10	D0363J	
PD10L	D0316J	
PD416	D0463J	
PD416L	D0416J	
AN960	NAS620	Equivalent Substitution
AN970-( )	N/A	
AN975-( )	N/A	
HARPER	BOKER'S	
3/16	C145712[14]	Equivalent Substitution
1/4	C102780[15]	Equivalent Substitution
3/8	C102781[16]	
HARPER	ECD050	
3/16	-21[17]	Equivalent Substitution
1/4	-11[18]	
5/16	-19[19]	
3/8	-15[20]	
5/8	-17[21]	
BOKER'S	ECD050	
C102780	-11	Equivalent Substitution
C102781	-15	
C145712	-21	
C162187	-11	
C162188	-13	
C162189	-15	
C162190	-17	
C162191	-19	
C172152	-23	
C173300	-25	
MS20002-( )	N/A	
MS27183-1	AN940-13	
MS35333	AN936	
-37	A6	Equivalent Substitution
-38	A8	
-39	A10	
-40	A416	
-41	A516	
-42	A616	
-43	A716	
-44	A816	
-47	A1216	
-29	-B4	
MS35338	AN935	
-40	-4	Equivalent Substitution
-41	-6	
-42	-8	
-42	-8L	
-99	B8L	
-43	-10	
-44	-416L	
MS51859-15	N/A	
NAS1149	NAS620	Equivalent Substitution

Table H – Riv Nuts

RIV NUT	ALTERNATE	
A8K75	MS27130A13K	Equivalent Substitution
A10K	MS27130	
80	A25K	Equivalent Substitution
116	A99K	
130	A26K	

[14] 0.688" OD x 0.203" ID x 0.041", 304 Stainless Steel
[15] 0.69" OD x 0.265" ID x 0.048", 304 Stainless Steel
[16] 1.00" OD x 0.392" ID x 0.062", 316 Stainless Steel
[17] 0.688" OD x 0.203" ID x 0.041", 304 Stainless Steel
[18] 0.69" OD x 0.265" ID x 0.048", 304 Stainless Steel
[19] 0.875" OD x 0.337" ID x 0.062", 316 Stainless Steel
[20] 1.00" OD x 0.392" ID x 0.062", 316 Stainless Steel
[21] 0.625" OD x 0.260" ID x 0.062", 316 Stainless Steel

UNCONTROLLED COPY WHEN DOWNLOADED OR PRINTED

Visit www.enstromhelicopter.com for instructions to order an original manual and to register for email notification of updates.

166	A100K	
216	A101K	
MS27130	A10K	
A25K	80	Equivalent Substitution
A99K	116	
A26K	130	
A100K	166	
A101K	216	
MS27130	NAS1329	
A13K	A8K75	Equivalent Substitution
A25K	A3K80	
A26K	AK130	
MS27130	NAS1330	
A99K	A3K116	Equivalent Substitution
A100K	A3K166	
A101K	A3K216	
NAS1329	MS27130	
A8K75	A13K	Equivalent Substitution
A3K80	A25K	
AK130	A26K	
NAS1330	MS27130	
A3K116	A99K	Equivalent Substitution
A3K166	A100K	
A3K216	A101K	

Table I – Turn Buckles

TURN BUCKLE	ALTERNATE	
MS21251-( )	N/A	
MS21256-( )	N/A	

Table J – Grommets

GROMMETS	ALTERNATE	
AN931	MS35489	
-2-9	-2	
-2-16	-3	
-3-5	-4	
-3-9	-134	
-3-10	-5	
-4-7	-6	
-4-12	-7	
-4-16	-8	
-5-9	-9	
-5-12	-10	
-5-13	-118	
-6-10	-11	
-6-16	-12	
-7-11	-13	
-8-13	-14	
-8-20	-15	
-9-13	-16	
-10-14	-17	
-10-20	-18	
-11-16	-19	
-12-17	-20	
-12-20	-135	
-12-23	-21	
-12-26	-120	
-14-20	-22	
-14-26	-121	
-16-22	-23	
-16-30	-24	
-20-38	-25	
-20-40	-26	
-24-28	-27	

Table K – Cotter Pins

COTTER PINS	ALTERNATE	
AN381	MS24665	
-1-6	N/A	
-1-8	-22	
-1-12	-24	
-1-16	-26	
-15-5	N/A	
-15-6	N/A	
-15-7	N/A	
-15-8	-58	
-15-10	N/A	
-15-12	-88	
-15-14	N/A	
-15-16	-90	
-15-20	-91	
-15-24	-92	
-15-28	-93	
-15-32	-94	
-2-5	N/A	
-2-6	N/A	
-2-7	-1013	
-2-8	-151	
-2-10	-152	
-2-12	-153	
-2-14	N/A	
-2-16	-155	
-2-20	-157	
-2-24	-159	
-2-28	-161	
-2-32	-162	
-25-8	-227	
-25-10	N/A	

UNCONTROLLED COPY WHEN DOWNLOADED OR PRINTED

Visit www.enstromhelicopter.com for instructions to order an original manual and to register for email notification of updates.

-25-12	-229	
-25-14	N/A	
-25-16	-231	
-25-18	N/A	
-25-20	-233	
-25-22	N/A	
-25-24	-235	
-25-26	N/A	
-25-28	-237	
-25-32	-238	
-3-8	-298	
-3-10	N/A	
-3-12	-300	
-3-14	N/A	
-3-16	-302	
-3-18	N/A	
-3-20	-304	
-3-22	N/A	
-3-24	-306	
-3-26	N/A	
-3-28	-308	
-3-32	-309	
-4-8	-366	
-4-12	-368	
-4-14	N/A	
-4-16	-370	
-4-18	N/A	
-4-20	-372	
-4-22	N/A	
-4-24	374	
-4-26	N/A	
-4-28	-376	
-4-32	-377	
-4-36	-378	
-5-8	N/A	
-5-12	-436	
-5-16	-437	
-5-18	N/A	
-5-20	-439	
-5-22	N/A	
-5-24	-441	
-5-26	N/A	
-5-28	-443	
-5-32	-444	
-5-36	-445	
-5-40	-446	
-6-24	-513	
-6-26	N/A	
-6-28	-515	
-6-32	-516	
-6-36	-517	
-6-40	-518	
-6-48	-520	
-7-32	-580	
-7-36	-581	
-7-40	-582	
-8-32	-640	
-8-36	-641	
-8-40	-642	
-8-48	-643	
-8-56	-644	
-8-64	-645	
-10-32	-701	
-10-36	-702	
-10-40	-703	

Table L – Clamps (Nylon)

CLAMPS	ALTERNATE	
1/8-6NA	CCH12-S10	
1/4-6NA	CCH25-S10	
3/8-6NA	CCH38-S10	
1/2-6NA	CCH50-S10	
5/8-6NA	CCH62-S10	
3/4-6NA	CCH75-S10	
7/8-6NA	CCH87-S10	
1-6NA	CCH100-S10	
439-SS4-8-2-6	NAS1714C3-4NW	Equivalent Substitution

Table M – Cable Ties

CABLE TIE	ALTERNATE	
SST2S-( )[22]	CBR3S-M	Equivalent Substitution
SST1.5I-( )[1]	CBR3I-M or CBR1.5I-M	
SST1M-( )[1]	CBR1M-M or CBR2M-M	
ILT2S-M	CBR3S-M	
ILT1.5I-M	CBR3I-M CBR1.5I-M	
ILT1M-M	CBR1M-M or CBR2M-M	

Table N – U-Channel (Rubber)

U-CHANNEL	ALTERNATE	
X-142	AX-142P	Equivalent Substitution

[22] Suffix may either be -MP or -P.

UNCONTROLLED COPY WHEN DOWNLOADED OR PRINTED

Visit www.enstromhelicopter.com for instructions to order an original manual and to register for email notification of updates.

X-142[23]	GE52-C69 GEE36FR-C GEE62FR-C GEE36FR-CY GEE62FR-CY	Equivalent Substitution

Table O – Shrink Tubing

SHRINK TUBING	ALTERNATE	
3028-3/32	FIT-221V-3/32	Equivalent Substitution
3028-1/8	FIT-221V-1/8	
3028-1/4	FIT-221V-1/4	
3028-3/8	FIT-221V-3/8	
FIT-221V-1/2	N/A	
FIT-221V-3/4	N/A	
FIT-221V-1	N/A	
FIT-221V-1 1/2	N/A	
FIT221V-3/16AL	N/A	

Table P – Ring Tongue Terminals

RING TONGUE TERMINAL	ALTERNATE	
AA	MS25036	
-820-04	-148	
-821-06	-102	
-821-08	-149	
-821-10	-103	
-822-10	-103	
-822-14	-150	
-822-56	-104	
-832-06	-102	
BB	MS25036	
-523-04	-152	
-525-14	-154	
-537-04	-152	
-537-10	-108	
-818-38	-110	
-825-14	-154	
-825-56	-109	
-837-06	-107	
-837-08	-153	
-837-10	-108	
C	MS25036	
-528-08	-156	
-528-10	-112	
-530-56	-113	
-540-38	-114	
-828-08	-156	
-828-10	-112	
-830-14	-157	
-830-56	-113	
-836-06	-111	
-840-38	-114	
D	MS25036	
-750-14	-116	
-751-56	-117	
-756-06	190670035[24]	
-756-08	190670037[3]	
E	MS25036	
-360-14	-120	
-760-14	-120	
-760-56	-121	
-960-56	-121	
F	MS20659	
-366-14	-111	
-366-38	-112	
-366-56	-132	
-367-10	-144	
-367-14	-111	
-367-56	-132	
G-375-14	MS20659	
-375-14	-113	
-375-38	-114	
-375-56	-147	
M	MS25036	
-8113-04	-144	
-8118-06	-145	
-8118-08	-146	

Table Q – Retaining Ring

RETAINING RING	ALTERNATE	
N5100-78-S-PP	ON78EXTSP (Meyer)	
N5002-268-PP	ON268INVSP	

Table R – Cushioned Clamps

CLAMP	ALTERNATE	

[23] Substitution to GE( ) or GEE( ) permitted only for interior non-aesthetic areas.

[24] ETC/Molex

UNCONTROLLED COPY WHEN DOWNLOADED OR PRINTED

Visit www.enstromhelicopter.com for instructions to order an original manual and to register for email notification of updates.

MS21919( )[25]	MS21919W( )	
MS21919DG( )	MS21919CJ( )	
MS21919WDG( )	MS21919WCJ( )	

Table S – Plusnut

PLUSNUT	ALTERNATE	
S8P-270	S8P270ZK	Equivalent Substitution

Table T – Solder Sleeve Shield Terminator

SOLDER SLEEVE SHIELD TERMINATOR	ALTERNATE	
ST63-2-00	M83519/1-2	
ST63-3-00	M83519/1-3	
ST63-4-00	M83519/1-4	
ST63-5-00	M83519/1-5	

Table U – Plug, Pipe – Countersink Hex Head

PLUG, PIPE	ALTERNATE	
AN932-( )	MS27769-( )	

Table V – Clip Nut

CLIP NUT	ALTERNATE	
RM52LHA4972802	13100000-5	

Table W – Plug and Bleeder – Screw Thread

PLUG AND BLEEDER	ALTERNATE	
AN814-2D	AS5169D02	
AN814-2DL	AS5169D02L	
AN814-3DL	AS5169D03L	
AN814-4DL	AS5169D04L	
AN814-5DL	AS5169D05L	
AN814-6DL	AS5169D06L	
AN814-8DL	AS5169D08L	

Table X – Pin, Retaining, Safety

PIN, RETAINING, SAFETY	ALTERNATE	
AN416-1	A-A-55488-1	
AN416-2	A-A-55488-2	

Table Y – Quarter Turn Fastener

QUARTER TURN FASTENER	ALTERNATE	
AW4-( )	AJW4-( )	
AW4-( )	D4-AJW4-( )	

Table Z – Quick Disconnect Terminal

TERMINAL	ALTERNATE	
AA-2201	19003-0001	
AA-2202	19003-0011	Equivalent Substitution
AA-2204	19003-0024	
AA-8137	19019-0006	
BB-2206	19003-0040	
BB-8132	19019-0022	
C-2265	19005-0010	

Table AA – Plug (BNC, TNC, N)

PLUG	ALTERNATE	
225345-6	5-225345-6	Equivalent Substitution
225392-2	5225392-2	
225395-6	5225395-6	
225395-7	5225395-7	
225396-7	5225396-7	
225554-6	5225554-6	
225699-1	5225699-1	
225973-4	5225973-4	
UG-89A/U	031-5	
	31-5	
	UG-89/U	

Table AB – Roll Pin

ROLL PIN	ALTERNATE	
( )S-094-0625	MS16562-215	

[25] MS21919F series clamps not permitted for use or substitution.

UNCONTROLLED COPY WHEN DOWNLOADED OR PRINTED

Visit www.enstromhelicopter.com for instructions to order an original manual and to register for email notification of updates.

Table AC – Sleeve, Coupling		
SLEEVE, COUPLING	**ALTERNATE**	
AN819-( )	MS20819-( )	
MS20819-( )	MS20819-( )J	

Table AD – Clevis Pin		
CLEVIS PIN	**ALTERNATE**	
AN393-( )	MS20392-2C( )	
AN394-( )	MS20392-3C( )	
AN395-( )	MS20392-4C( )	

Table AE – Quarter (1/4) Turn Fastener Receptacle		
Quarter (1/4) Turn Fastener Receptable	**ALTERNATE**	
S4-200	1219-4200-Z3Y	

UNCONTROLLED COPY WHEN DOWNLOADED OR PRINTED

Visit www.enstromhelicopter.com for instructions to order an original manual and to register for email notification of updates.